R410A/R32

Commercial Air Conditioners

Engineering Data

DC Series HRV 50/60Hz

VRF IDU







HRV-D200(C)

HRV-D300(C)

HRV-D400(C)

HRV-D500(C)

HRV-D800(C)

HRV-D1000(C)

HRV-D1500(C)

HRV-D2000(C)

HRV

1 Specifications 4

2 Dimensions 6

3 Unit Placement 8

4 Main parts of the unit 9

5 Wiring Diagram 10

6 Electrical Characteristics 12

7 Sound Levels 13

8 Fan Performance 15

1 Specifications

Table 1.1: HRV-D200(C) / HRV-D300(C) / HRV-D400(C) / HRV-D500(C) specifications

Model			HRV-D200(C)	HRV-D300(C)	HRV-D400(C)	HRV-D500(C)
Power supply		Ph-V-Hz	1-phase, 220-240V~50/60Hz			
Input power (H/M/L)(standard G4)		W	70/45/25	100/55/35	110/70/40	150/95/50
Input power (H/M/L)(F7+M5)		W	80/40/25	100/55/35	110/70/40	150/95/50
Nominal Temperature Efficiency (standard G4) (H/M/L)		%	79.5/81.1/83.5	75.5/78.8/82.5	77.7/79.0/81.3	80.6/82.2/85.5
Nominal Enthalpy Efficiency (standard G4) (H/M/L)		%	75.0/77.5/79.6	72.1/75.0/79.3	73.5/75.3/78.0	74.0/76.6/80.5
Nominal Temperature Efficiency (F7+M5) (H/M/L)		%	81.8/85.4/87.5	80.4/81.8/83.5	79.2/81.1/83.3	77.2/79.4/82.5
Nominal Enthalpy Efficiency (F7+M5) (H/M/L)		%	81.2/83.1/85.0	79.4/81.2/84.0	79.6/81.8/84.2	72.3/75.6/78.6
Current		A	0.64	0.84	0.97	1.2
Indoor external static pressure(H speed+ standard G4)		Pa	100	90	100	90
Fresh air external static pressure (H speed +F7+M5)		Pa	75	70	70	65
Discharge air external static pressure (H speed +F7+M5)		Pa	100	110	110	110
Nominal air flow		m^3/h	200	300	400	500
Sound Pressure (H/M/L)		dB(A)	33/29.5/25.5	36.5/33.5/30	36.5/32/28	36/30.5/24.5
Sound Power		dB(A)	45	48	48	50
Net dimension[1] (L×W×H)		mm	1195×784×272	1195×898×272	1276×1189×272	1311×1090×390
Packing size (L×W×H)		mm	1275×880×420	1275×994×420	1360×1284×420	1390×1244×540
Net/Gross weight		kg	51/68	57/74	72/92	62/85
Power supply wire	Wire qty.		3	3	3	3
	Code wire cross-section	mm^2	2.5	2.5	2.5	2.5
Controller			Wired controller, Centralized controller, BMS gateway			
Fresh air	Fresh Air Diameter	mm	Φ144	Φ144	Φ198	Φ244
	Air drop	Pa	52	179	218	357

Notes:

1. The dimension is only the body size, excluding the size of the installation lug, connecting copper pipe, etc. For detailed dimensions, please refer to the installation manual.
2. For the units model of HRV-D200(C)~HRV-D500(C), there are 3-speed adjustable air-volume (Hi, Med, Low).
3. The parameters in the above table are measured at high speed.
4. Sound level is measured at 1.5m below the unit.

Table 1.2: HRV-D800(C) / HRV-D1000(C) / HRV-D1500(C) / HRV-D2000(C) specifications

Model			HRV-D800(C)	HRV-D1000(C)	HRV-D1500(C)	HRV-D2000(C)
Power supply		Ph-V-Hz	1-phase, 220-240V~50/60Hz			
Input power (H/M/L) (standard G4)		W	320/170/80	380/210/100	680/320/200	950/500/230
Input power(H/M/L) (F7+M5)		W	320/170/80	420/230/100	680/320/200	950/500/230
Nominal Temperature Efficiency (standard G4) (H/M/L)		%	78.7/82.1/86.8	82.8/84.0/87.4	75.5/78.6/80.2	77.2/79.5/83.4
Nominal Enthalpy Efficiency (standard G4) (H/M/L)		%	72.3/75.4/79.0	76.0/76.0/80.1	69.4/71.2/74.8	74.7/77.0/80.6
Nominal Temperature Efficiency (F7+M5) (H/M/L)		%	74.9/77.1/80.8	75.4/78.0/81.4	83.8/84.6/86.2	78.8/80.5/83.4
Nominal Enthalpy Efficiency (F7+M5) (H/M/L)		%	71.1/74.4/78.0	67.3/71.1/75.0	74.6/76.2/78.8	71.1/75.0/79.6
Current		A	2.4	2.9	3.8	5.7
Indoor external static pressure(H speed+ standard G4)		Pa	140	160	180	200
Fresh air external static pressure (H speed +F7+M5)		Pa	100	110	150	160
Discharge air external static pressure (H speed +F7+M5)		Pa	155	145	180	180
Nominal air flow		m^3/h	800	1000	1500	2000
Sound Pressure (H/M/L)		dB(A)	42/39/34	44/39/33.5	51.5/46.5/41.5	53/48.5/42.5
Sound Power		dB	55	54	69	70
Net dimension[1] (L×W×H)		mm	1311×1270×390	1311×1510×390	1740×1344×615	1811×1545×685
Packing size (L×W×H)		mm	1390×1424×540	1390×1670×540	1830×1520×770	1900×1720×845
Net/Gross weight		kg	77/101	85/112	168/200	195/235
Power supply wire	Wire qty.		3	3	3	3
	Code wire cross- section	mm^2	2.5	2.5	2.5	2.5
Controller			Wired controller, Centralized controller, BMS gateway			
Fresh air	Fresh Air Diameter	mm	Φ244	Φ244	346×326	346×326
	Air drop	Pa	357	384	253	322

Notes:

1. The dimension is only the body size, excluding the size of the installation lug, connecting copper pipe, etc. For detailed dimensions, please refer to the installation manual.
2. For the units model of HRV-D800(C)~HRV-D2000(C), there are 3-speed adjustable air-volume (Hi, Med, Low).
3. The parameters in the above table are measured at high speed.
4. Sound level is measured at 1.5m below the unit.

2 Dimensions

- **HRV-D200(C)~HRV-D400(C)**

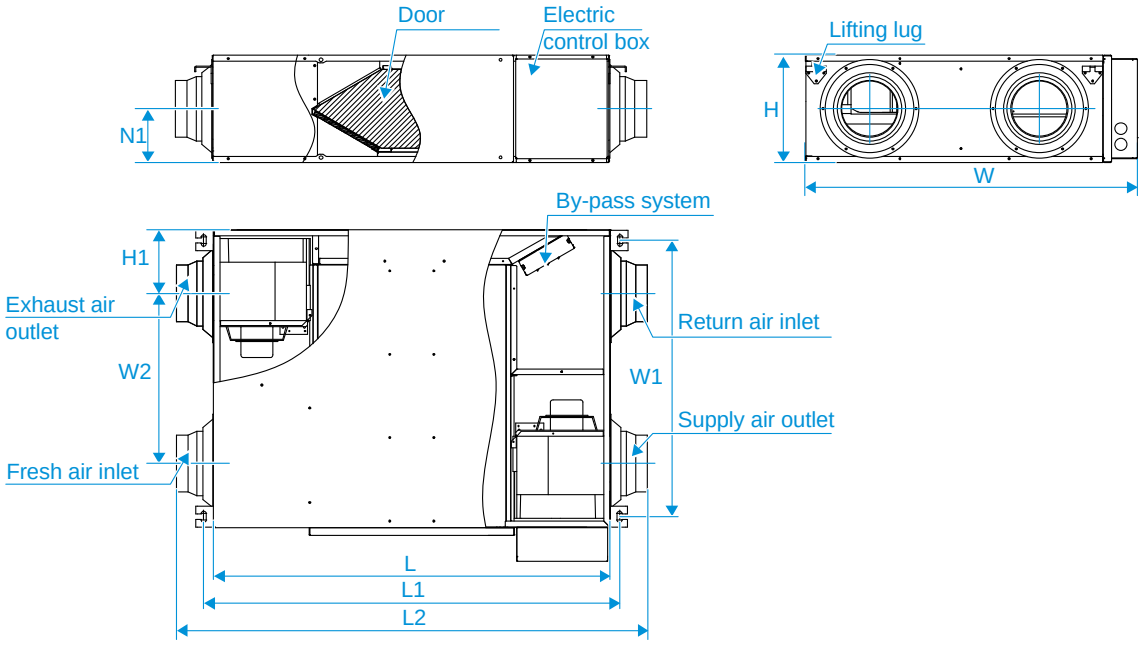

- **HRV-D500(C)~HRV-D1000(C)**

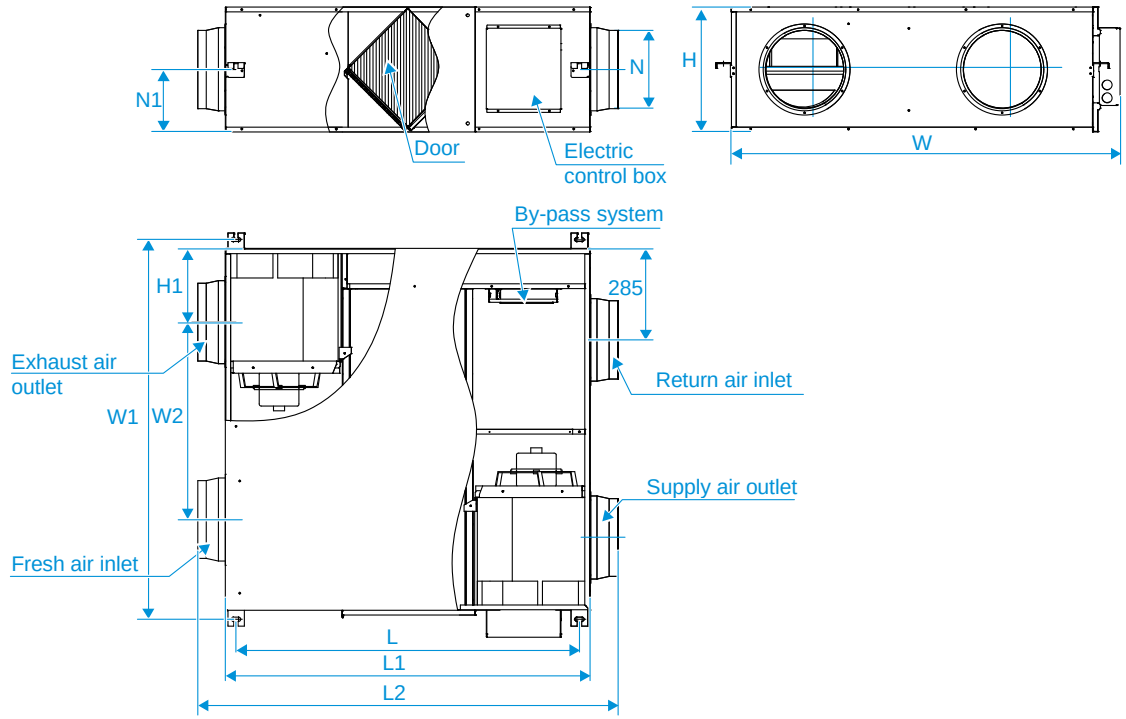

Model	L	L1	L2	W	W1	W2	H	H1	N	N1
HRV-D200(C)	1007	1054	1195	785	588	356	272	142	Φ144	136
HRV-D300(C)	1007	1054	1195	898	701	431	272	163	Φ144	136
HRV-D400(C)	1081	1129	1276	1188	991	595	272	202	Φ198	136
HRV-D500(C)	1071	1138	1311	1090	1005	465	390	227	Φ244	195
HRV-D800(C)	1071	1138	1311	1270	1185	616	390	229	Φ244	195
HRV-D1000(C)	1071	1138	1311	1510	1431	764	390	230	Φ244	195

- **HRV-D1500(C)**

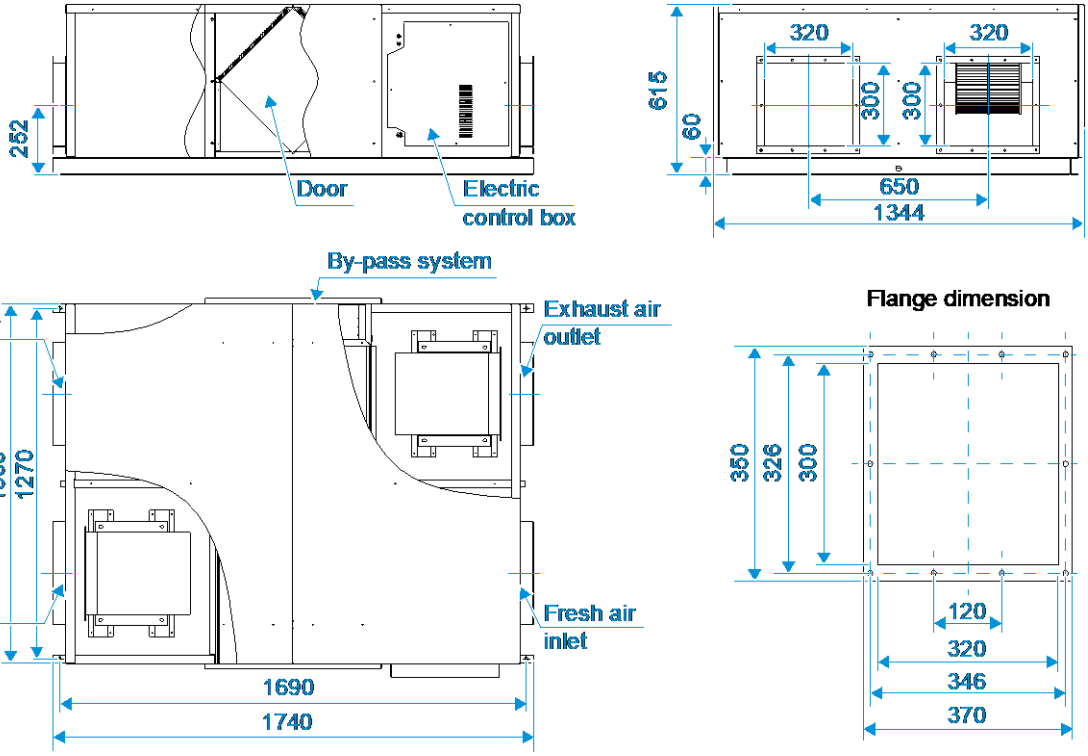

- **HRV-D2000(C)**

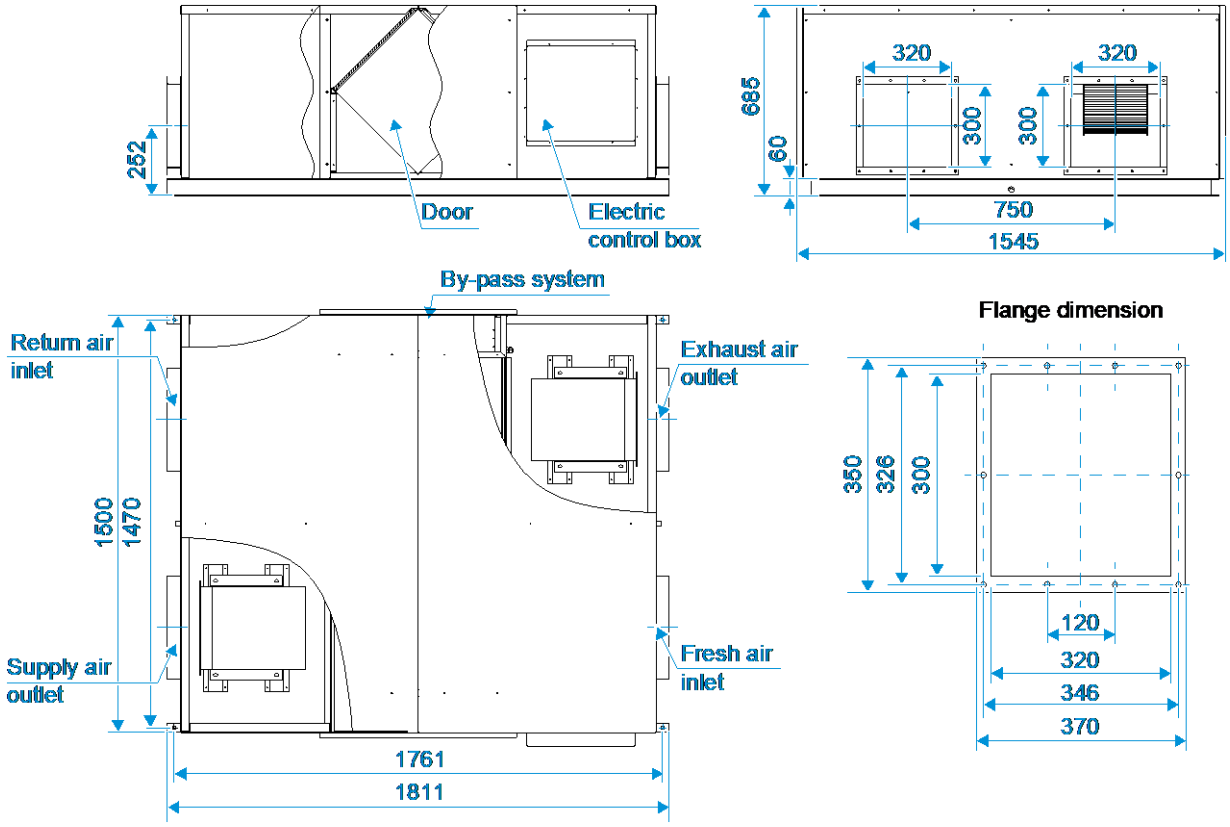

3 Unit Placement

3.1 Placement Considerations

Unit placement should take account of the following considerations:

- Units should not be installed in the following locations:
  - A place filled with mineral oil, fumes or mist, like a kitchen.
  - A place where there are corrosive gases, such as acid or alkaline gases.
  - A place exposed to combustible gases and using volatile combustible gases such as diluent or gasoline.
  - A place where there is equipment emitting electromagnetic radiation.
  - A place where there is a high salt content in the air like a coast.
  - Do not use the unit in an environment where an explosion may occur.
  - Places like in vehicles or cabin rooms.
  - Factories with major voltage fluctuations in the power supplies.
  - Other special environmental conditions.
- Units should be installed in positions where:
  - Ensure that the airflow in and out of the IDU is reasonably organized.
  - Ensure IDU maintenance space.
  - Prevent the unit from blowing directly to the human body.
  - The indoor unit should not be lifted in the places like load-bearing beams and columns that affect the structural safety of the house.
  - The wired controller and the indoor unit should be in the same installation space; otherwise, the sampling point setting of the wired controller needs to be changed.
  - There is enough space for installation and maintenance.
  - The ceiling is level, and the structure is strong enough to support the indoor unit. If necessary, take measures to reinforce the unit's stability.
  - It is easy to supply airflow to every corner of the room.
  - There is no direct heat radiation.
  - Avoid installation in narrow spaces or where there are more stringent noise requirements.

3.2 Space Requirements

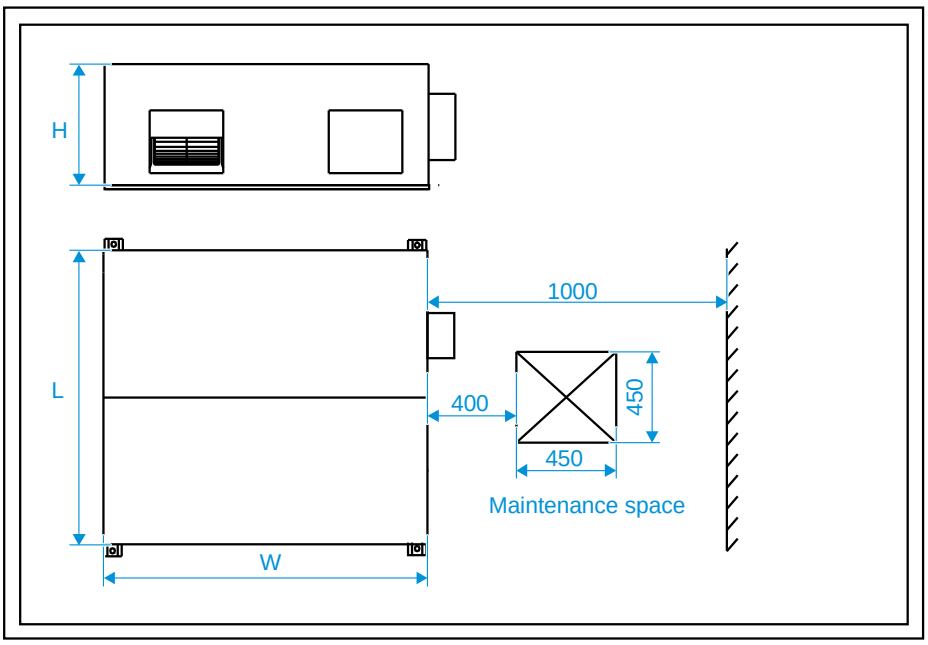

4 Main parts of the unit

- **HRV-D200(C)~HRV-D400(C)**

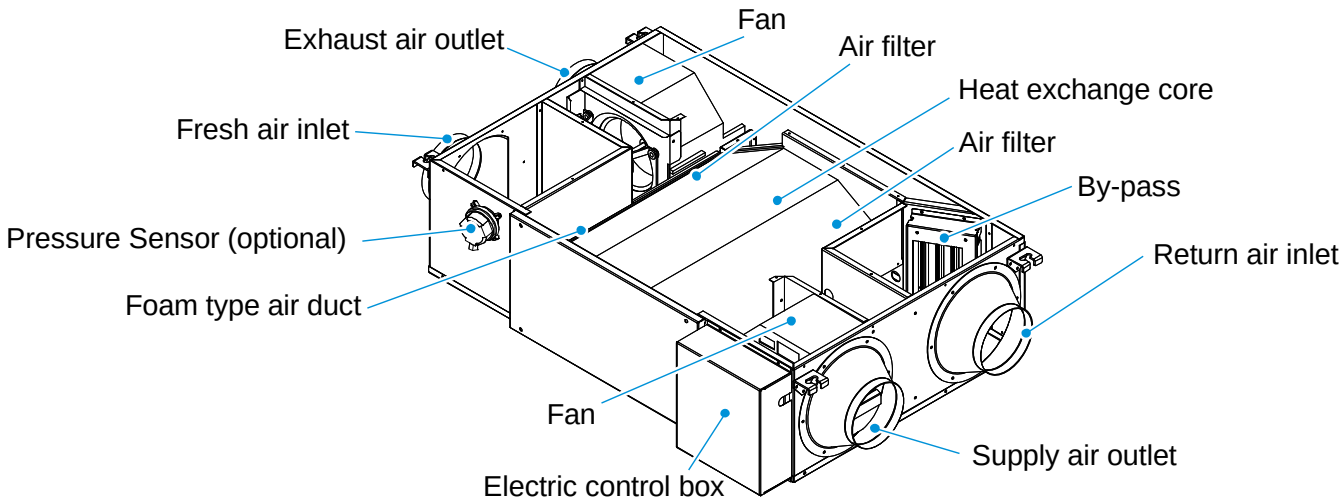

- **HRV-D500(C)~HRV-D1000(C)**

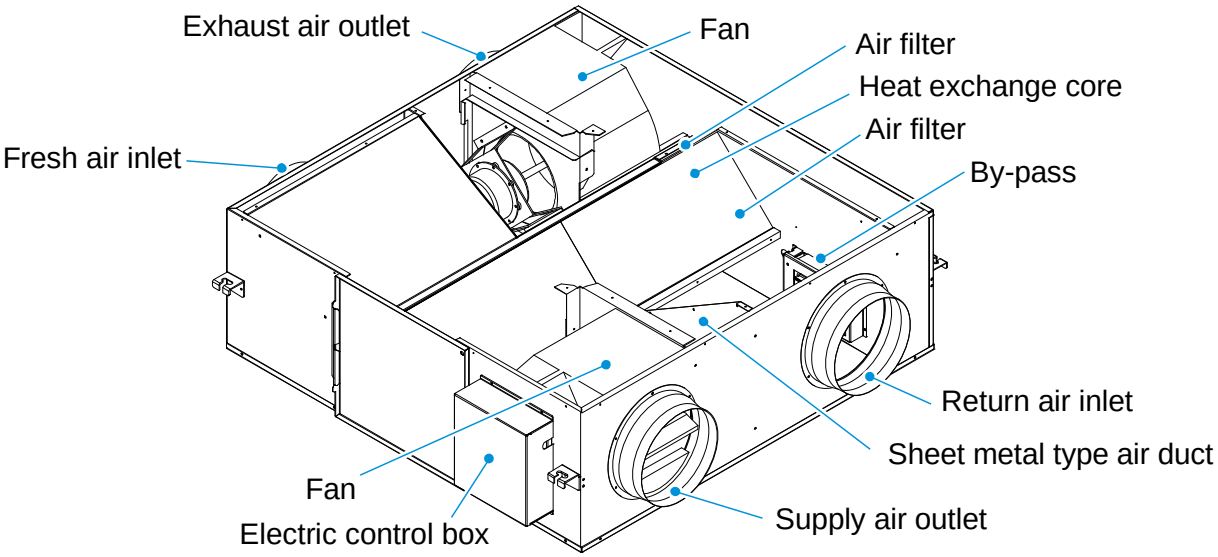

- **HRV-D1500(C)~HRV-D2000(C)**

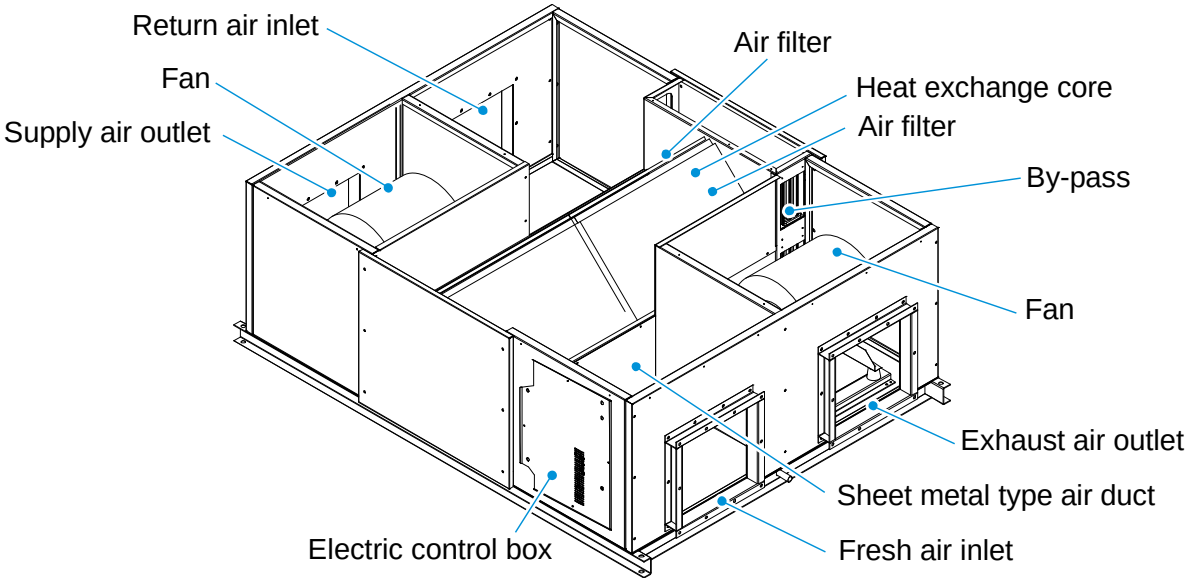

5 Wiring Diagram

Figure 5.1: HRV wiring diagram

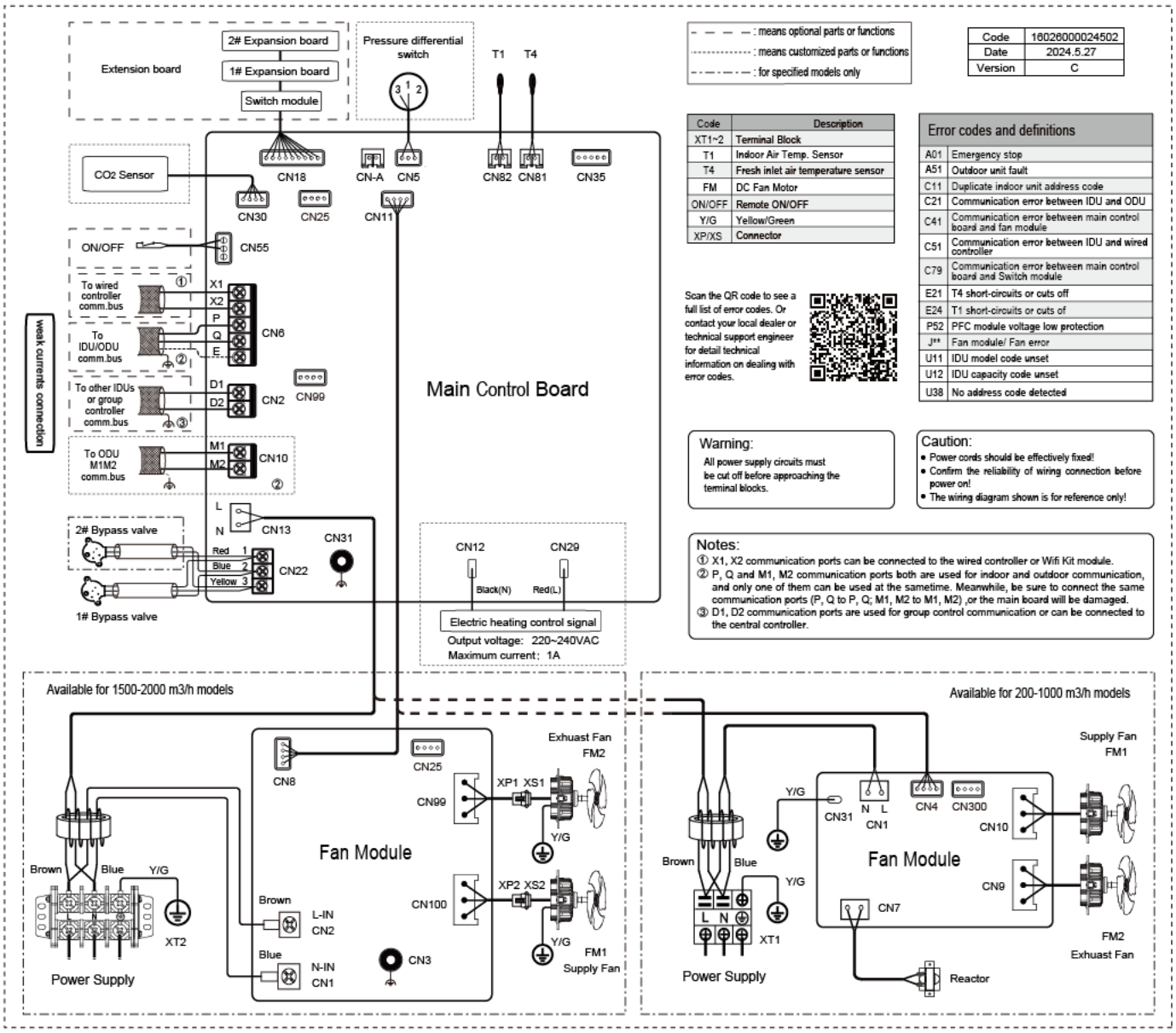

Notes for installers and service engineers

Caution

- All installation, servicing and maintenance must be carried out by competent and suitably qualified, certified and accredited professionals and in accordance with all applicable legislation.
- Units should be grounded in accordance with all applicable legislation. Metal and other conductive components should be insulated in accordance with all applicable legislation.
- Power supply wiring should be securely fastened at the power supply terminals – loose power supply wiring would represent a fire risk.
- After installation, servicing or maintenance, the electric control box cover should be closed. Failing to close the electric control box cover risks fire or electric shock.
- The dotted lines indicate the field wiring or optional function.
- PQ and M1M2 communication ports both are used for indoor and outdoor communication, and only one of them can be used at a time. Meanwhile, be sure to connect the same communication ports (PQ to PQ; M1M2 to M1M2) in case of damage of the main control board.
- D1D2 communication ports are used for group control communication. When connecting the group controller, the D1D2 port of the indoor units that are to be group controlled must be connected in daisy chain, and the group controller must be connected to the X1X2 port of one of the indoor units in the group control, and set to group control mode. In addition, D1D2 communication ports can also be connected to the central controller.

6 Electrical Characteristics

Table 6.1: HRV electrical characteristics

Model name	Power supply						Indoor Fan Motor	
	Hz	Volts (V)	Min. volts	Max. volts	MCA (A)	MFA (A)	Rated power output (W)	FLA (A)
HRV-D200(C)	50/60	220-240	198	264	1.3	10	100	0.64
HRV-D300(C)	50/60	220-240	198	264	1.7	10	100	0.84
HRV-D400(C)	50/60	220-240	198	264	2.0	10	100	0.97
HRV-D500(C)	50/60	220-240	198	264	2.5	16	170	1.2
HRV-D800(C)	50/60	220-240	198	264	5.0	16	170	2.4
HRV-D1000(C)	50/60	220-240	198	264	6.0	16	170	2.9
HRV-D1500(C)	50/60	220-240	198	264	8.0	30	750	3.8
HRV-D2000(C)	50/60	220-240	198	264	10.0	30	750	5.7

Abbreviations:
MCA: Minimum Circuit Amps
MFA: Maximum Fuse Amps
FLA: Full Load Amps. (A), which is the full load current of the indoor fan motor (reliable operation at the fastest speed setting).

7 Sound Levels

7.1 Overall

Table 7.1: HRV sound pressure levels[1]

Model name	Sound pressure levels dB		
	H	M	L
HRV-D200(C)	33	29.5	25.5
HRV-D300(C)	36.5	33.5	30
HRV-D400(C)	36.5	32	28
HRV-D500(C)	36	30.5	24.5
HRV-D800(C)	42	39	34
HRV-D1000(C)	44	39	33.5
HRV-D1500(C)	51.5	46.5	41.5
HRV-D2000(C)	53	48.5	42.5

Notes:

1. The sound pressure level is measured in an anechoic chamber at a distance of 1.5m below the unit, under the default static pressure setting at the factory. During on-site operation, the sound pressure level may be higher due to the influence of environmental noise.

Figure 7.1: HRV sound pressure level measurement

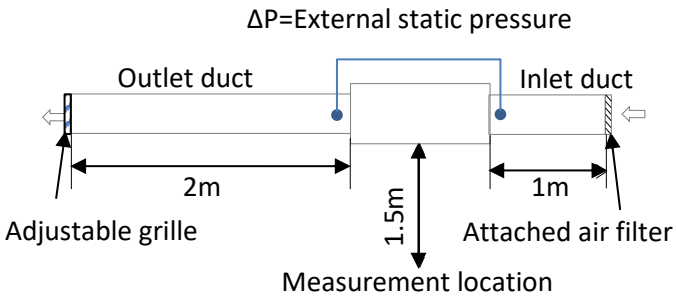

Connected to a top-discharge outdoor unit and measured in anechoic room. Adjusting the outlet grille to make the ΔP is equal to the rated static pressure, the data was recorded at 1.5m below the unit.

7.2 Octave Band Levels

Figure 7.2: HRV-D200(C) octave band levels

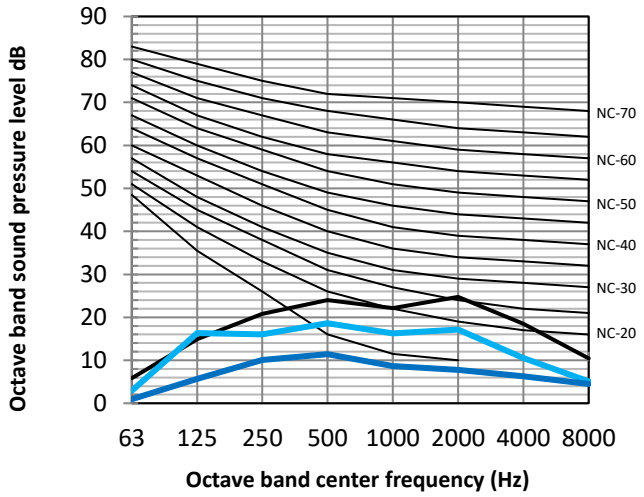

Figure 7.3: HRV-D300(C) octave band levels

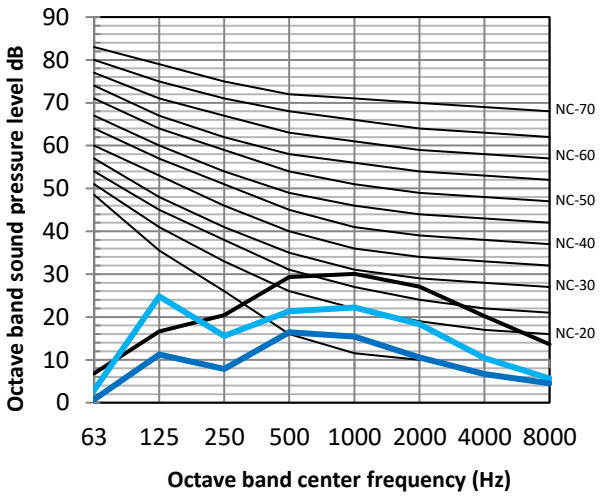

Figure 7.4: HRV-D400(C) octave band levels

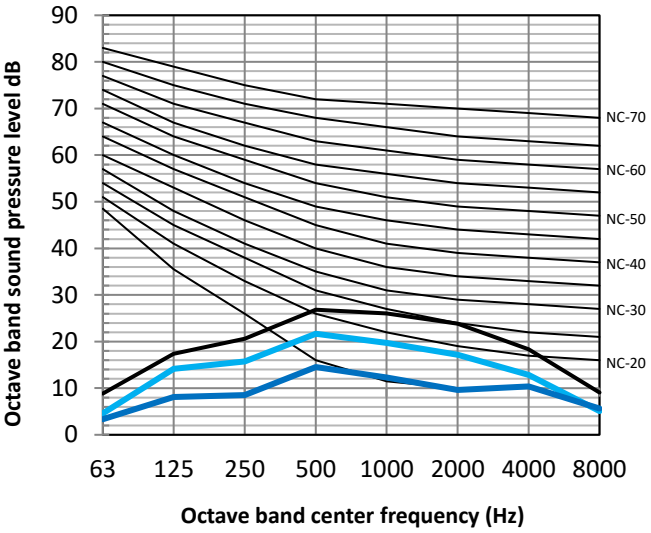

Figure 7.5: HRV-D500(C) octave band levels

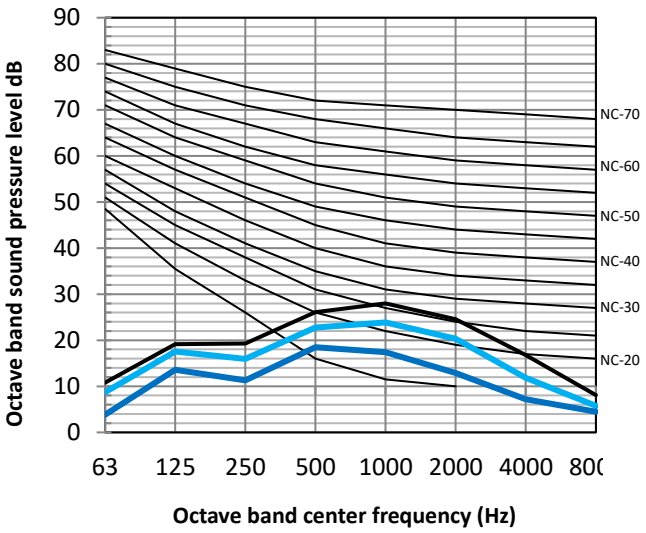

Figure 7.6: HRV-D800(C) octave band levels

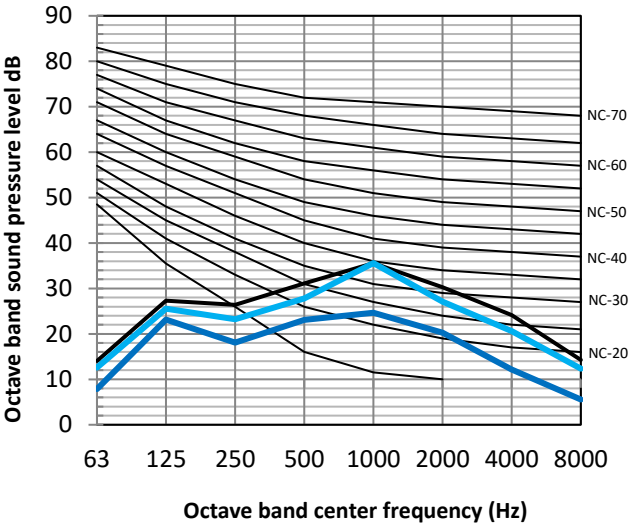

Figure 7.7: HRV-D1000(C) octave band levels

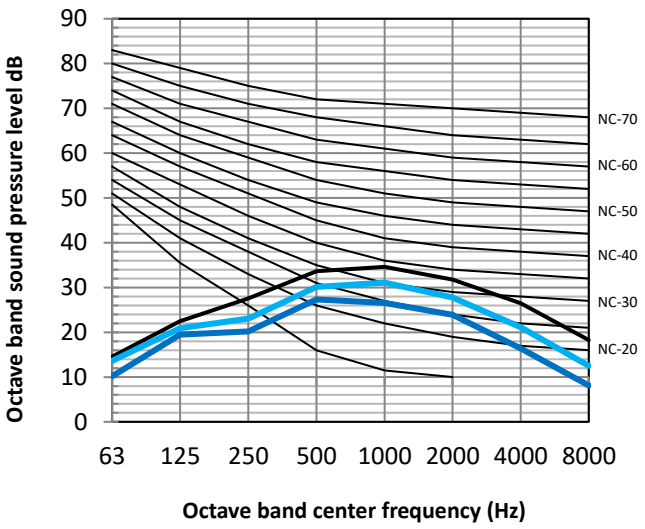

Figure 7.8: HRV-D1500(C) octave band levels

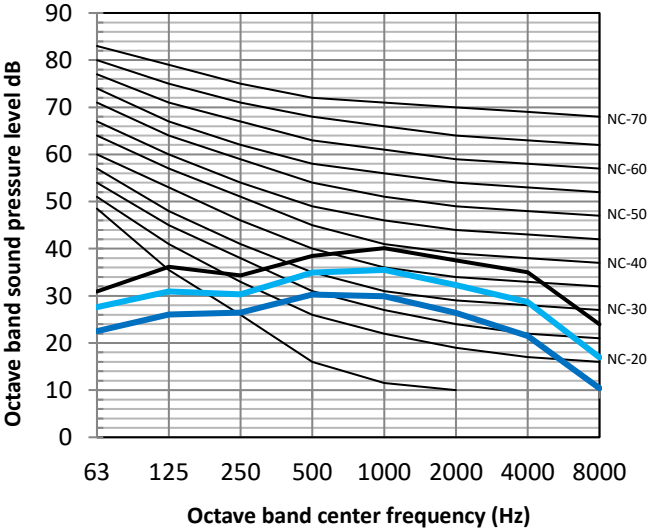

Figure 7.9: HRV-D2000(C)octave band levels

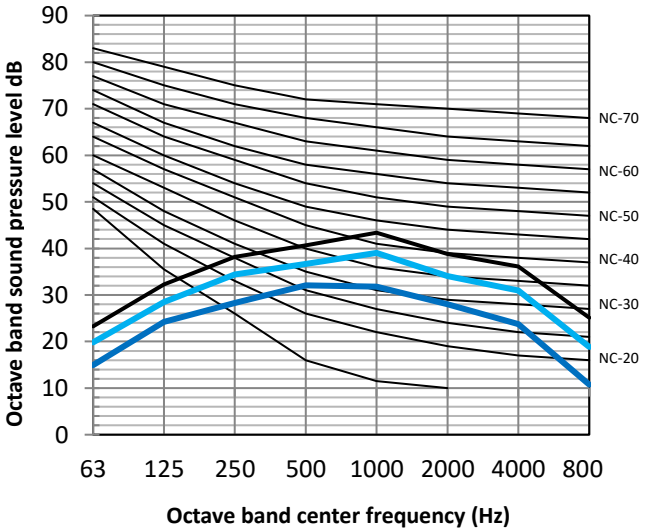

8 Fan Performance

8.1 How to Read the Diagram

The horizontal axis is the Static Pressure (Pa) while the vertical axis represents the Air Flow (m^3/h). The characteristic curve for the “H” “M” and “L” fan speed control.

8.2 Fan Performance Diagram

All the follow fan performance diagrams are obtained under the condition of G4 filter.

Figure8.1: HRV-D200(C)

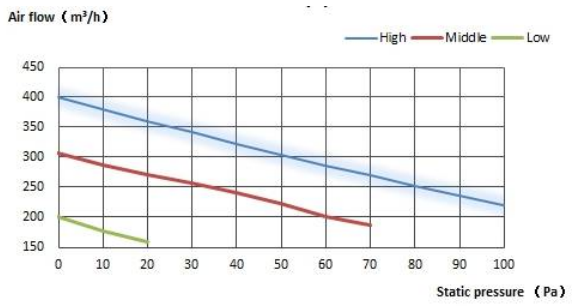

Figure8.2: HRV-D300(C)

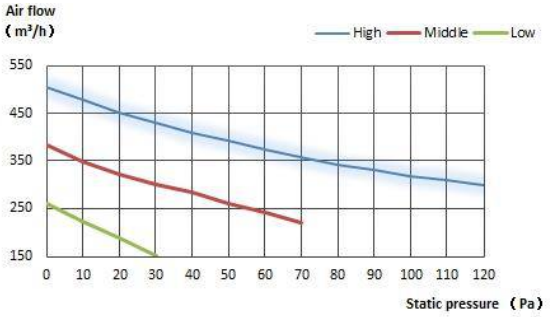

Figure8.3: HRV-D400(C)

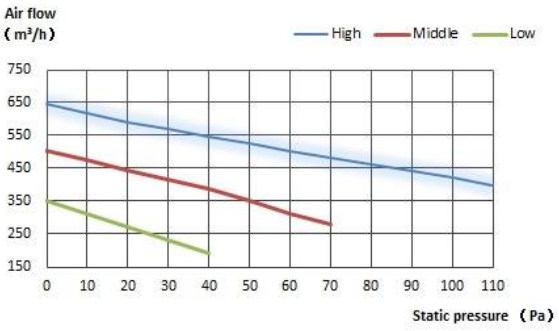

Figure8.4: HRV-D500(C)

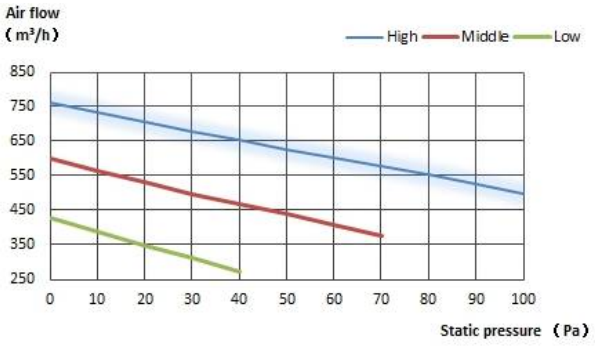

Figure8.5: HRV-D800(C)

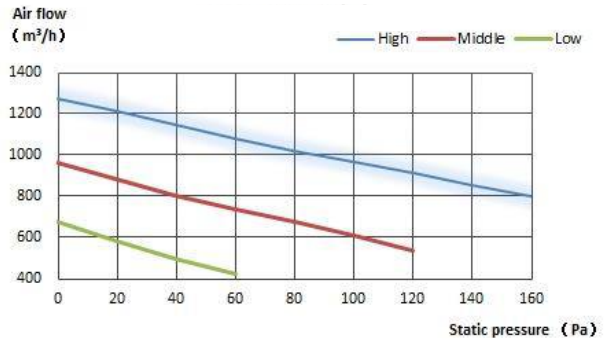

Figure8.6: HRV-D1000(C)

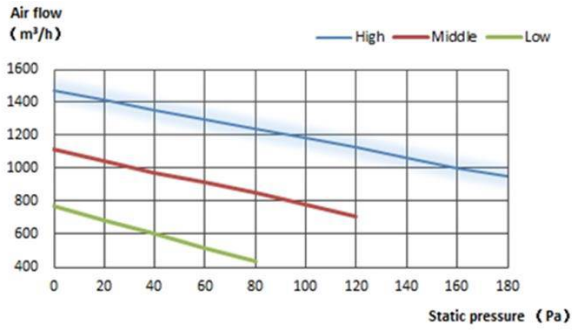

Figure8.7: HRV-D1500(C)

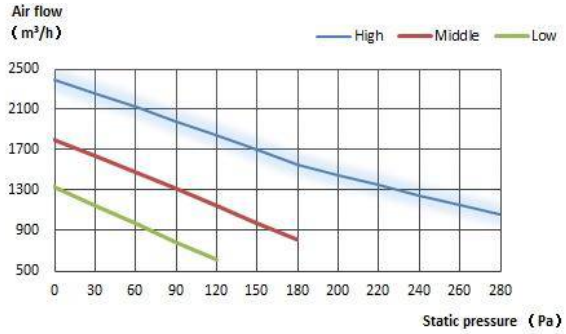

Figure8.8: HRV-D2000(C)

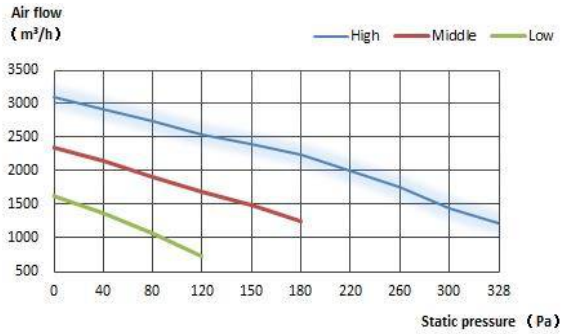

All the follow fan performance diagrams are obtained under the condition of F7+M5 filter.

Figure8.9: HRV-D200(C)

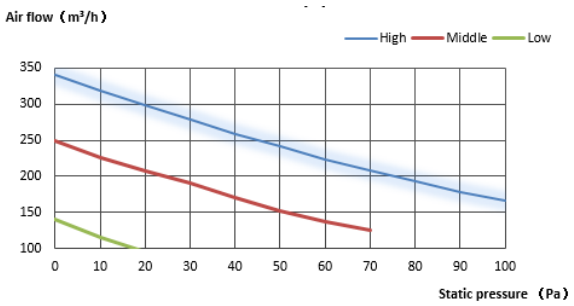

Figure8.10: HRV-D300(C)

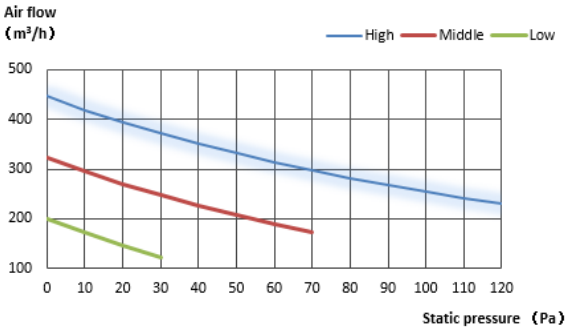

Figure8.11: HRV-D400(C)

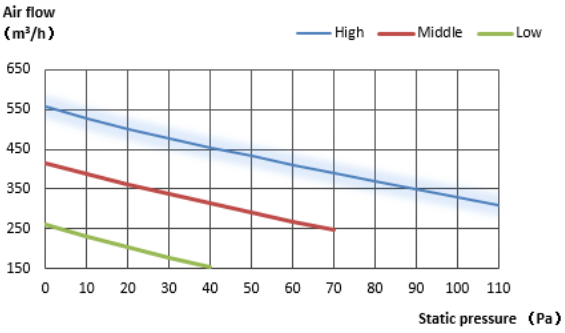

Figure8.12: HRV-D500(C)

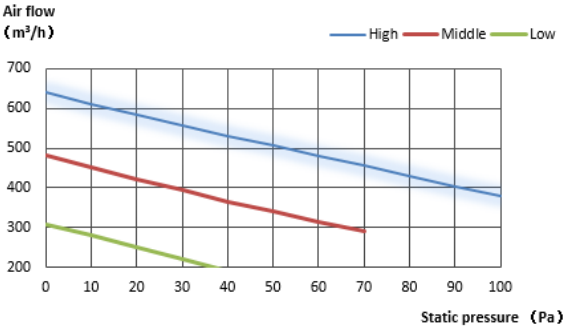

Figure8.13: HRV-D800(C)

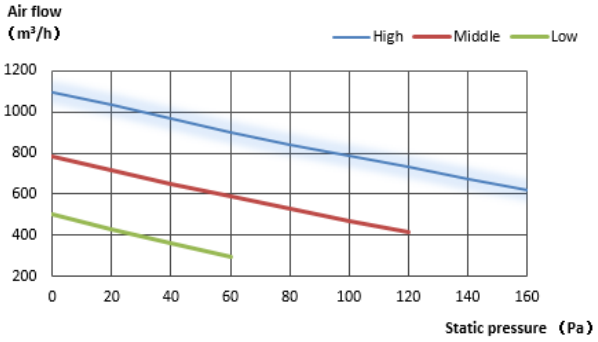

Figure8.14: HRV-D1000(C)

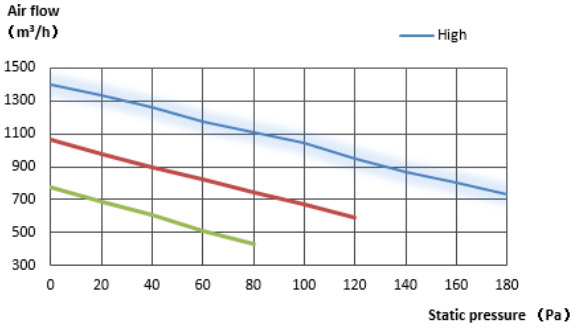

Figure8.15: HRV-D1500(C)

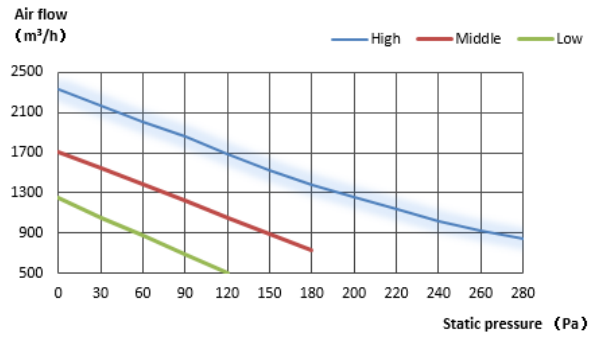

Figure8.16: HRV-D2000(C)

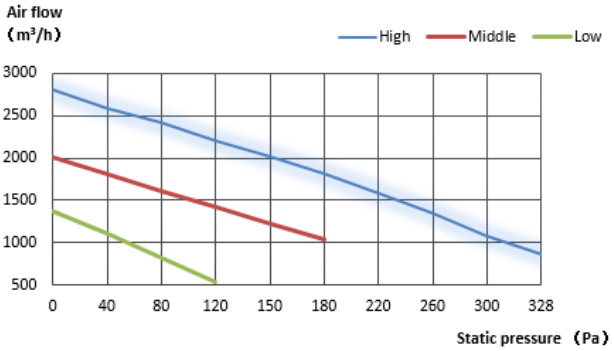

T-V8HRVHEU
Ver. 2023-11

Midea Building Technologies Division
Midea Group

Add.: Midea Headquarters Building, 6 Midea Avenue, Shunde, Foshan, Guangdong, China
Postal code: 528311
mbt.midea.com / www.midea-group.com/ tsp.midea.com/

Note: Product specifications change from time to time as product improvements and developments are released and may vary from those in this document.