

MIDDLE & HIGH STATIC PRESSURE DUCT TYPE AIR CONDITIONER

USER MANUAL

MODEL NUMBER:
DUCMI140IHC
DUCMI170IHC

Warning notices: Before using this product, please read this manual carefully and keep it for future reference.
The design and specifications are subject to change without prior notice for product improvement.
Consult with your dealer or manufacturer for details.
The diagram above is just for reference. Please take the appearance of the actual product as the standard.

THANK YOU LETTER

Thank you for choosing Midea! Before using your new Midea product, please read this manual thoroughly to ensure that you know how to operate the features and functions that your new appliance offers in a safe way.

CONTENTS

THANK YOU LETTER 01

SAFETY PRECAUTIONS 02

SPECIFICATIONS 08

TROUBLESHOOTING 10

PRODUCT INSTALLATION 14

PRODUCT OVERVIEW 17

REFRIGERANT PIPING CONNECTION 29

WIRING PRECAUTIONS 32

AIR EVACUATION 38

NOTE ON ADDING REFRIGERANT 39

TEST RUN 40

COMMISSION 41

PACKING AND UNPACKING THE UNIT 42

TRADEMARKS, COPYRIGHTS AND LEGAL STATEMENT 43

DISPOSAL AND RECYCLING 43

DATA PROTECTION NOTICE 44

SAFETY PRECAUTIONS

Intended Use

The following safety guidelines are intended to prevent unforeseen risks or damage from unsafe or incorrect operation of the appliance. Please check the packaging and appliance on arrival to make sure everything is intact to ensure safe operation. If you find any damage, please contact the retailer or dealer. Please note modifications or alterations to the appliance are not allowed for your safety. Unintended use may cause hazards and loss of warranty claims.

Explanation of Symbols

⚠	**WARNING** The signal word indicates a hazard with a medium level of risk which, if not avoided, may result in death or serious injury.
⚠	**CAUTION** The signal word indicates a hazard with a low degree of risk which, if not avoided, may result in minor or moderate injury.

Read these operating instructions carefully and attentively before using/commissioning the unit and keep them in the immediate vicinity of the installation site or unit for later use!

⚠ WARNING

- This appliance can be used by children aged from 8 years and above and persons with reduced physical, sensory or mental capabilities or lack of experience and knowledge if they have been given supervision or instruction concerning use of the appliance in a safe way and understand the hazards involved. Children shall not play with the appliance. Cleaning and user maintenance shall not be made by children without supervision (European Union countries).
- This appliance is not intended for use by persons (including children) with reduced physical, sensory or mental capabilities, or lack of experience and knowledge, unless they have been given supervision or instruction concerning use of the appliance by a person responsible for their safety. Children should be supervised to ensure that they do not play with the appliance (IEC Standard Requirements).

⚠ WARNINGS FOR PRODUCT USE

- If an abnormal situation arises (like a burning smell), immediately turn off the unit and disconnect the power. Call your dealer for instructions to avoid electric shock, fire or injury.
- **Do not** insert fingers, rods or other objects into the air inlet or outlet. This may cause injury, since the fan may be rotating at high speeds.
- **Do not** use flammable sprays such as hair spray, lacquer or paint near the unit. This may cause fire or combustion.
- **Do not** store gasoline or flammable substances near air conditioner. Emitted gas may collect around the unit and cause explosion.
- **Do not** install your air conditioner in a wet room such as a bathroom or laundry room. Too much exposure to water can cause electrical components to short circuit.
- **Do not** expose your body directly to cool air for a prolonged period of time.
- **Do not** allow children to play with the air conditioner. Children must be supervised around the unit at all times.
- If the air conditioner is used together with burners or other heating devices, thoroughly ventilate the room to avoid oxygen deficiency and carbon monoxide build up.
- In certain environments, such as kitchens, server rooms, etc., the use of specially designed air-conditioning units is highly recommended.
- Improper installation, adjustment, alteration, service or maintenance can cause property damage, personal injury or loss of life. Installation and service must be performed by a licensed professional HVAC installer or equivalent, service agency, or the gas supplier.
- If the supply cord is damaged, it must be replaced by the manufacturer, its service agent or similarly qualified persons in order to avoid a hazard.

⚠ CAUTION

- Turn off the air conditioner and disconnect the power if you are not going to use it for a long time.
- Make sure that water condensation can drain unhindered from the unit.
- **Do not** operate the air conditioner with wet hands. This may cause electric shock.
- **Do not** use device for any other purpose than its intended use.
- **Do not** climb onto or place objects on top of the outdoor unit.
- **Do not** allow air conditioners to run for long periods of time when the humidity is too high or when doors and windows are left open for long periods of time.
- As with any mechanical equipment, contact with sharp sheet metal edges can result in personal injury. Take care while handling this equipment and wear gloves and protective clothing.

⚠ ELECTRICAL WARNINGS

- Only use the specified power cord. If the power cord is damaged, it must be replaced by the manufacturer, its service agent or similarly qualified persons in order to avoid a hazard.
- The product must be properly grounded at the time of installation, or electrical shock may occur.
- For all electrical work, follow all local and national wiring standards, regulations, and the Installation Manual. Connect cables tightly, and clamp them securely to prevent external forces from damaging the terminal. Improper electrical connections can overheat and cause fire, and may also cause shock. All electrical connections must be made according to the Electrical Connection Diagram located on the panels of the indoor and outdoor units.

  All wiring must be properly arranged to ensure that the control board cover can close properly. If the control board cover is not closed properly, it can lead to corrosion and cause the connection points on the terminal to heat up, catch fire, or cause electrical shock.
- If connecting power to fixed wiring, an all-pole disconnection device which has at least 3mm clearances in all poles, and have a leakage current that may exceed 10mA, the residual current device (RCD) having a rated residual operating current not exceeding 30mA, and disconnection must be incorporated in the fixed wiring in accordance with the wiring rules.
- If the SUPPLY CORD damaged, it must be replaced by the manufacturer, its service agent or similarly qualified persons in order to avoid a hazard.

⚠ WARNINGS FOR PRODUCT INSTALLATION

- Installation must be performed by an authorized dealer or specialist. Defective installation can cause water leakage, electrical shock, or fire.
- Installation must be performed according to the installation instructions. Improper installation can cause water leakage, electrical shock, or fire. (In North America, installation must be performed in accordance with the requirement of NEC and CEC by authorized personnel only.)
- Contact an authorized service provider for repair or maintenance of this unit. This appliance shall be installed in accordance with national wiring regulations.
- Only use the included accessories, parts, and specified parts for installation. Using non-standard parts can cause water leakage, electrical shock, fire, and can cause the unit to fail.
- Install the unit in a firm location that can support the unit's weight. If the chosen location cannot support the unit's weight, or the installation is not done properly, the unit may fall and cause serious injury and damage.
- Install drainage piping according to the instructions in this manual. Improper drainage may cause water damage to your home and property.
- For units that have an auxiliary electric heater, do not install the unit within 1 meter (3 feet) of any combustible materials.
- **Do not** install the unit in a location that may be exposed to combustible gas leaks. If combustible gas accumulates around the unit, it may cause fire.

- **Do not** turn on the power until all work has been completed.
- When moving or relocating the air conditioner, consult experienced service technicians for disconnection and reinstallation of the unit.
- How to install the appliance to its support, please read the information for details in "indoor unit installation" and "outdoor unit installation" sections.
- Excessive Weight Hazard - Use two or more people when moving and installing the unit. Failure to do so can result in back or other type of injury.

⚠ WARNINGS FOR CLEANING AND MAINTENANCE

- Turn off the device and disconnect the power before cleaning. Failure to do so can cause electrical shock.
- **Do not** clean the air conditioner with excessive amounts of water.
- **Do not** clean the air conditioner with combustible cleaning agents. Combustible cleaning agents can cause fire or deformation.

NOTE ABOUT FUSE SPECIFICATIONS

- The air conditioner's circuit board (PCB) may be designed with a fuse to provide overcurrent protection. This fuse must be replacing with identical component.
- The specifications of the fuse, if equipped, are printed on the circuit board, examples of such are T5A/250VAC and T10A/250VAC.

NOTE ABOUT FLUORINATED GASSES (NOT APPLICABLE TO THE UNIT USING R32 REFRIGERANT)

- This air-conditioning unit contains fluorinated greenhouse gasses. For specific information on the type of gas and the amount, please refer to the relevant label on the unit itself or the "Owner's Manual - Product Fiche" in the packaging of the outdoor unit. (Product Fiche for European Union products only).
- Installation, service, maintenance and repair of this unit must be performed by a certified technician.
- Product uninstallation and recycling must be performed by a certified technician.
- When the unit is checked for leaks, proper record-keeping of all checks is strongly recommended.

FOR FLAMMABLE REFRIGERANT

- When flammable refrigerant is employed, appliance shall be stored in a well-ventilated area where the room size corresponds to the room area as specific for operation. For R32 fragrant models, the minimum room size please see the following form:

(1) IEC Standard Requirements (Only applicable to IEC 60335-2-40: 2022).

Ceiling-mounted	Wall-mounted
m (kg)—— A_{min} (m^2)	m (kg)—— A_{min} (m^2)
≤2.503 —— 4	≤ 2.048 —— 4
2.503 < m ≤ 2.6 —— 4.28	2.048 < m ≤ 2.2 —— 4.58
2.6 < m ≤ 2.8 —— 4.97	2.2 < m ≤ 2.4 —— 5.45
2.8 < m ≤ **3.0** —— 5.70	2.4 < m ≤ 2.6 —— 6.40
3.0 < m ≤ **3.2** —— 6.49	2.6 < m ≤ 2.8 —— 7.42
3.2 < m ≤ **3.4** —— 7.32	2.8 < m ≤ 3.0 —— 8.52
3.4 < m ≤ **3.6** —— 8.21	3.0 < m ≤ 3.2 —— 9.69
3.6 < m ≤ **3.8** —— 9.15	3.2 < m ≤ 3.4 —— 11.0
3.8 < m ≤ **4.0** —— 10.2	3.4 < m ≤ 3.6 —— 12.3
4.0 < m ≤ **4.2** —— 11.2	3.6 < m ≤ 3.8 —— 13.7
4.2 < m ≤ **4.4** —— 12.3	3.8 < m ≤ 4.0 —— 15.2
4.4 < m ≤ **4.6** —— 13.4	4.0 < m ≤ 4.2 —— 16.7
4.6 < m ≤ **4.8** —— 14.6	4.2 < m ≤ 4.4 —— 18.4
4.8 < m ≤ **5.0** —— 15.9	4.4 < m ≤ 4.6 —— 20.0
5.0 < m ≤ **5.2** —— 17.2	4.6 < m ≤ 4.8 —— 21.8
5.2 < m ≤ **5.4** —— 18.5	4.8 < m ≤ 5.0 —— 23.7
5.4 < m ≤ **5.6** —— 19.9	5.0 < m ≤ 5.2 —— 25.6
5.6 < m ≤ **5.8** —— 21.3	5.2 < m ≤ 5.4 —— 27.6
5.8 < m ≤ **6.0** —— 22.8	5.4 < m ≤ 5.6 —— 29.7
	5.6 < m ≤ 5.8 —— 31.9
	5.8 < m ≤ 6.0 —— 34.1

(2) The EN standard applies in the following areas European Union, EFTA (except for Switzerland), United Kingdom, Turkey (Only applicable to EN 60335-2-40: 2003 and IEC 60335-2-40: 2013).

Ceiling-mounted	Wall-mounted
m (kg)—— A_{min} (m^2)	m (kg)—— A_{min} (m^2)
≤2.503 —— 4	≤ 2.048 —— 4
2.503 < m ≤ 2.6 —— 4.32	2.048 < m ≤ 2.2 —— 4.62
2.6 < m ≤ 2.8 —— 5.01	2.2 < m ≤ 2.4 —— 5.50
2.8 < m ≤ 3.0 —— 5.75	2.4 < m ≤ 2.6 —— 6.45
3.0 < m ≤ 3.2 —— 6.54	2.6 < m ≤ 2.8 —— 7.48
3.2 < m ≤ 3.4 —— 7.38	2.8 < m ≤ 3.0 —— 8.59
3.4 < m ≤ 3.6 —— 8.28	3.0 < m ≤ 3.2 —— 9.77
3.6 < m ≤ 3.8 —— 9.22	3.2 < m ≤ 3.4 —— 11.1
3.8 < m ≤ 4.0 —— 10.3	3.4 < m ≤ 3.6 —— 12.4
4.0 < m ≤ 4.2 —— 11.3	3.6 < m ≤ 3.8 —— 13.8
4.2 < m ≤ 4.4 —— 12.4	3.8 < m ≤ 4.0 —— 15.3
4.4 < m ≤ 4.6 —— 13.6	4.0 < m ≤ 4.2 —— 16.9
4.6 < m ≤ 4.8 —— 14.8	4.2 < m ≤ 4.4 —— 18.5
4.8 < m ≤ 5.0 —— 16.0	4.4 < m ≤ 4.6 —— 20.2
5.0 < m ≤ 5.2 —— 17.3	4.6 < m ≤ 4.8 —— 22.0
5.2 < m ≤ 5.4 —— 18.7	4.8 < m ≤ 5.0 —— 23.9
5.4 < m ≤ 5.6 —— 20.1	5.0 < m ≤ 5.2 —— 25.8
5.6 < m ≤ 5.8 —— 21.5	5.2 < m ≤ 5.4 —— 27.9
5.8 < m ≤ 6.0 —— 23.0	5.4 < m ≤ 5.6 —— 29.9
	5.6 < m ≤ 5.8 —— 32.1
	5.8 < m ≤ 6.0 —— 34.4

m: The amount of refrigerant represented by “m” in the table is the sum of the nameplate nominal charge and the additional amount of refrigerant mentioned in the instruction manual NOTE ON ADDING REFRIGERANT.

A_{min}: Minimum floor area.

- Reusable mechanical connectors and flared joints are not allowed indoors (EN Standard Requirements).
- Mechanical connectors used indoors shall have a rate of not more than 3g/year at 25% of the maximum allowable pressure. When mechanical connectors are reused indoors, sealing parts shall be renewed. When flared joints are reused indoors, the flare part shall be re-fabricated. (UL Standard Requirements)
- When mechanical connectors are reused indoors, sealing parts shall be renewed.
- When flared joints are reused indoors, the flare part shall be re-fabricated (IEC Standard Requirements). Mechanical connectors used indoors shall comply with ISO 14903.

European Disposal Guidelines

This marking shown on the product or its literature, indicates that waste electrical and eletrical equipment should not be mixed with general household waste.



Correct Disposal of This Product

(Waste Electrical & Electronic Equipment)

This appliance contains refrigerant and other potentially hazardous materials. When disposing of this appliance, the law requires special collection and treatment. **Do not** dispose of this product as household waste or unsorted municipal waste.

When disposing of this appliance, you have the following options:

- Dispose of the appliance at designated municipal electronic waste collection facility.
- When buying a new appliance, the retailer will take back the old appliance free of charge.
- The manufacturer will take back the old appliance free of charge.
- Sell the appliance to certified scrap metal dealers.

Special notice

Disposing of this appliance in the forest or other natural surroundings endangers your health and is bad for the environment. Hazardous substances may leak into the ground water and enter the food chain.

The rated static pressure

MODEL	9~24K	30~36K	42~60K
PRESSURE	0.10 in-H2O (25Pa)	0.15 in-H2O (37Pa)	0.20 in-H2O (50Pa)

NOTE

The maximum functional total external static pressure cannot exceed 0.80 in WC or 200 Pa. The airflow reduces significantly beyond 0.80 in WC or 200Pa. System design should allow for the increased resistance of filters as they become dirty.

SPECIFICATIONS

Product Model	DUCMI140IHC UCMI140OC	DUCMI170IHC UCMI170OC
Power source	220-240V~ 50Hz, 1Ph	220-240V~ 50Hz, 1Ph
Cooling capacity	14.0kW	17.0kW
Heating capacity	16.8kW	18.0kW
Rated current	31.0A	31.0A
Rated power input	7000W	7000W
Outdoor unit resistance class	IPX4	IPX4

CARE AND MAINTENANCE

⚠ CAUTION

Cleaning Your Indoor Unit

- Always **TURN OFF** your AC system and disconnect its power supply before cleaning or maintenance.
- Only use a soft, dry cloth to wipe the unit clean. You can use a cloth soaked in warm water to wipe it clean if the unit is especially dirty.
- Do not use chemicals or chemically treated cloths to clean the unit
- Do not use benzene, paint thinner, polishing powder or other solvents to clean the unit. They can cause the plastic surface to crack or deform.
- Before changing the filter or cleaning, turn off the unit and disconnect its power supply. Removal and maintenance must be performed by a certified technician.
- When removing filter, do not touch metal parts in the unit. The sharp metal edges can cut you.
- Do not use water to clean the inside of the indoor unit. This can destroy insulation and cause electrical shock.
- Do not expose filter to direct sunlight when drying. This can shrink the filter.
- Any maintenance and cleaning of indoor unit should be performed by an authorized dealer or a licensed service provider.
- Any unit repairs should be performed by an authorized dealer or a licensed service provider.
- Cannot be maintained and cleaned by the user.

Maintenance your AC.

Maintenance – Long Periods of Non-Use

If you plan not to use your air conditioner for an extended period of time, do the following:

Turn off the unit and disconnect the power

Turn on FAN function until unit dries out completely

Maintenance – Pre-Season Inspection

After long periods of non-use, or before periods of frequent use, do the following:

Check for damaged wires

Check for leaks

Make sure nothing is blocking all air inlets and outlets

TROUBLESHOOTING

⚠ CAUTION

If any of the following conditions occurs, turn off your unit immediately!

- The power cord is damaged or abnormally warm
- You smell a burning odor
- The unit emits loud or abnormal sounds
- A power fuse blows or the circuit breaker frequently trips
- Water or other objects fall into or out of the unit

DO NOT ATTEMPT TO FIX THESE YOURSELF! CONTACT AN AUTHORIZED SERVICE PROVIDER IMMEDIATELY.

Common Issues

The following problems are not a malfunction and in most situations will not require repairs.

Issue	Possible Causes
Unit does not turn on when pressing ON/OFF button	The Unit has a 3-minute protection feature that prevents the unit from overloading. The unit cannot be restarted within three minutes of being turned off.
	Cooling and Heating Models: If the Operation light and PRE-DEF (Pre-heating/ Defrost) indicators are lit up, the outdoor temperature is too cold and the unit's anti-cold wind is activated in order to defrost the unit.
	In Cooling-only Models: If the "Fan Only" indicator is lit up, the outdoor temperature is too cold and the unit's anti-freeze protection is activated in order to defrost the unit.
The unit changes from COOL/HEAT mode to FAN mode	The unit may change its setting to prevent frost from forming on the unit. Once the temperature increases, the unit will start operating in the previously selected mode again.
	The set temperature has been reached, at which point the unit turns off the compressor. The unit will continue operating when the temperature fluctuates again.
The indoor unit emits white mist	In humid regions, a large temperature difference between the room's air and the conditioned air can cause white mist.
Both the indoor and outdoor units emit white mist	When the unit restarts in HEAT mode after defrosting, white mist may be emitted due to moisture generated from the defrosting process.
The indoor unit makes noises	A rushing air sound may occur when the louver resets its position.
	A squeaking sound is heard when the system is OFF or in COOL mode. The noise is also heard when the drain pump (optional) is in operation.
	A squeaking sound may occur after running the unit in HEAT mode due to expansion and contraction of the unit's plastic parts.
Both the indoor unit and outdoor unit make noises	Low hissing sound during operation: This is normal and is caused by refrigerant gas flowing through both indoor and outdoor units.
	Low hissing sound when the system starts, has just stopped running, or is defrosting: This noise is normal and is caused by the refrigerant gas stopping or changing direction.
	Squeaking sound: Normal expansion and contraction of plastic and metal parts caused by temperature changes during operation can cause squeaking noises.

Issue	Possible Causes
The outdoor unit makes noises	The unit will make different sounds based on its current operating mode.
Dust is emitted from either the indoor or outdoor unit	The unit may accumulate dust during extended periods of non-use, which will be emitted when the unit is turned on. This can be mitigated by covering the unit during long periods of inactivity.
The unit emits a bad odor	The unit may absorb odors from the environment (such as furniture, cooking, cigarettes, etc.) which will be emitted during operations.
	The unit's filters have become moldy and should be cleaned. Contact a professional technician directly to replace.
The fan of the outdoor unit does not operate	During operation, the fan speed is controlled to optimize product operation.

NOTE: If problem persists, contact a local dealer or your nearest customer service center. Provide them with a detailed description of the unit malfunction as well as your model number.

When troubles occur, please check the following points before contacting a repair company.

Problem	Possible Causes	Solution
Poor Cooling Performance	Temperature setting may be higher than ambient room temperature	Lower the temperature setting
	The heat exchanger on the indoor or outdoor unit is dirty	Contact a professional technician directly to replace the heat exchanger
	The air filter is dirty	Contact a professional technician directly to replace the air filter
	The air inlet or outlet of either unit is blocked	Turn the unit off, remove the obstruction and turn it back on
	Doors and windows are open	Make sure that all doors and windows are closed while operating the unit
	Excessive heat is generated by sunlight	Close windows and curtains during periods of high heat or bright sunshine
	Too many sources of heat in the room (people, computers, electronics, etc.)	Reduce amount of heat sources
	Low refrigerant due to leak or long-term use	Check for leaks, re-seal if necessary and top off refrigerant

Problem	Possible Causes	Solution
The unit is not working	Power failure	Wait for the power to be restored
	The power is turned off	Turn on the power
	The fuse is burned out	Contact a professional technician directly to repair the fuse
	Remote control batteries are dead	Replace batteries
	The Unit's 3-minute protection has been activated	Wait three minutes after restarting the unit
	Timer is activated	Turn timer off
The unit starts and stops frequently	There's too much or too little refrigerant in the system	Contact a professional technician directly to repair
	Incompressible gas or moisture has entered the system.	Contact a professional technician directly to repair
	System circuit is blocked	Contact a professional technician directly to repair
	The compressor is broken	Contact a professional technician directly to repair
	The voltage is too high or too low	Install a manostat to regulate the voltage
Poor heating performance	The outdoor temperature is extremely low	Use auxiliary heating device
	Cold air is entering through doors and windows	Make sure that all doors and windows are closed during use
	Low refrigerant due to leak or long-term use	Contact a professional technician directly to repair
Indicator lamps continue flashing	The unit may stop operation or continue to run safely. If the indicator lamps continue to flash or error codes appear, wait for about 10 minutes. The problem may resolve itself. If not, disconnect the power, then connect it again. Turn the unit on. If the problem persists, disconnect the power and contact your nearest customer service center.	
Error code appears and begins with the letters as the following in the window display of indoor unit: • **E(x), P(x), F(x)** • **EH(xx), EL(xx), EC(xx)** • **PH(xx), PL(xx), PC(xx)**		

Troubleshoot Your Wireless Remote Control

Problem	Possible Causes	Solution
The fan speed cannot be changed.	Check whether AUTO mode is selected.	In AUTO mode, the fan speed is set automatically and cannot be changed.
	Check whether DRY mode is selected.	In DRY mode, the FAN SPEED button is ineffective. The fan speed can only be changed in COOL, FAN and HEAT mode.
The temperature display is off	Check whether FAN mode is selected.	In FAN mode, the temperature cannot be adjusted.
The TIMER OFF disappears after a period of time	If the TIMER OFF function was activated, the operation may have finished.	The air conditioner will automatically stop at the set time and the indicator light will turn off.
The TIMER ON indicator disappears after a period of time	If the TIMER ON function was activated, the operation may have finished.	The air conditioner will automatically start at the set time and the indicator light will turn off.
There is no sound when the ON/OFF button is pressed.	Check whether the signal transmitter of the remote control is properly directed towards the infrared signal receiver of the indoor unit.	Point the remote control directly at the receiver and press the ON/OFF button twice.

NOTE: If your problem persists after performing the checks and diagnostics above, turn off your unit immediately and contact an authorized service center.

If the solution suggests contacting a professional technician, please do not perform any operations and contact a professional technician directly.

PRODUCTION INSTALLATION

ACCESSORIES

The air conditioner comes with the following accessories. Use all of the installation parts and accessories to install the air conditioner. Improper installation may result in water leakage, electrical shock and fire, or cause the equipment to fail. The items are not included with the air conditioner must be purchased separately.

Name of Accessories	Q'ty (pc)	Shape	Name of Accessories	Q'ty (pc)	Shape
Manual	2~4		Remote controller (some models)	1	
Refirgenout in/out pipe protection cover	2		Connecting wire for display (2m) (some models)	1	
Copper nut	2		Magnetic ring (wrap the electric wires S1 & S2 (P & Q & E/HA&HB) around the magnetic ring twice) (some models)	1	 S1&S2 (P&Q&E)
Wired remote controller (with packing)	1				
Outlet pipe sheath (some models)	1		Magnetic ring (Hitch it on the connective cable between indoor unit and outdoor unit after installation.) (some models)	Varies by model	
Outlet pipe clasp (some models)	1~2 (depending on models)				
Seal ring (some models)	1		Cord protection rubber ring (some models)	1	
Drain joint (some models)	1	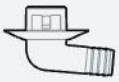	Display panel *Just for testing purposes only (some models- KJR-120G,KJR-120H)	1	
Locating line	2				

Note: When the wired remote controller is connected, the magnetic ring on the wired remote controller end.

Optional accessories

There are two types of remote controls: wired and wireless.
Select a remote controller based on customer preferences and requirements and install in an appropriate place.
Refer to catalogues and technical literature for guidance on selecting a suitable remote controller.

Display panel

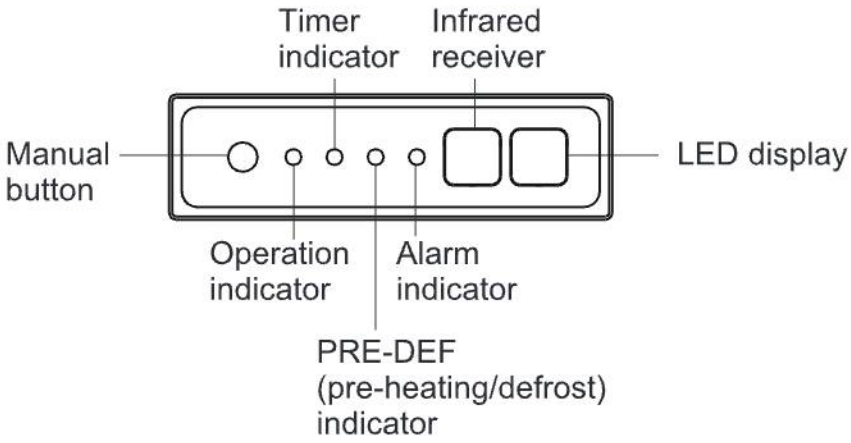

MANUAL button: This button selects the mode in the following order: AUTO, FORCED COOL, OFF.

FORCED COOL mode: In FORCED COOL mode, the operation light flashes. The system will then turn to AUTO after it has cooled with a high wind speed for 30 minutes. The remote control will be disabled during this operation.

OFF mode: When the display panel is turned OFF, the unit turns off and the remote control is re-enabled.

Operating Conditions

When your air conditioner is used outside of the following temperature ranges, certain safety protection features may activate and cause the unit to disable.

Inverter Split Type

	COOL mode	HEAT mode	DRY mode
Room Temperature	17°C - 32°C (62°F - 90°F)	0°C - 30°C (32°F - 86°F)	10°C - 32°C (50°F - 90°F)
Outdoor Temperature	0°C - 50°C (32°F - 122°F)	-15°C - 24°C (5°F - 75°F) -20°C - 24°C (-4°F - 75°F) (For special models)	0°C - 50°C (32°F - 122°F)
	-15°C - 50°C (5°F - 122°F) (For models with low temp. cooling systems.)		
	0°C - 52°C (32°F - 126°F) (For special tropical models)		0°C - 52°C (32°F - 126°F) (For special tropical models)

FOR OUTDOOR UNITS WITH AUXILIARY ELECTRIC HEATER

When outside temperature is below 0°C (32°F), we strongly recommend keeping the unit plugged in at all time to ensure smooth ongoing performance.

Size of connecting pipe

Parts you must purchase separately. Consult the dealer about the proper pipe size of the unit you purchased.

Name	Size	
Connecting pipe assembly	Liquid side	Ø6.35mm (1/4in)
		Ø9.52mm (3/8in)
		Ø12.7mm (1/2in)
	Gas side	Ø9.52mm (3/8in)
		Ø12.7mm (1/2in)
		Ø16mm (5/8in)
		Ø19mm (3/4in)
		Ø22mm (7/8in)

INSTALLATION SUMMARY

1

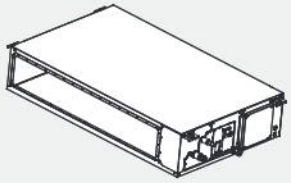

Install the indoor unit

2

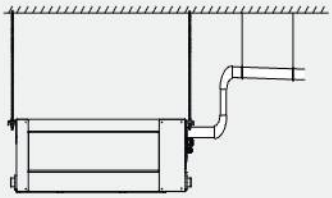

Install the drainpipe

3

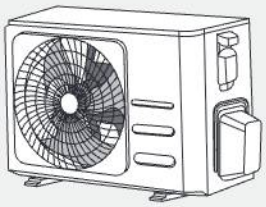

Install the outdoor unit

6

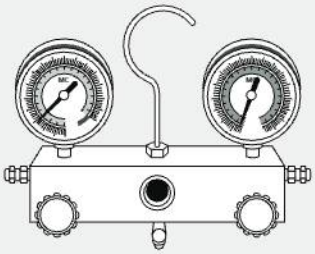

Evacuate the refrigeration system

5

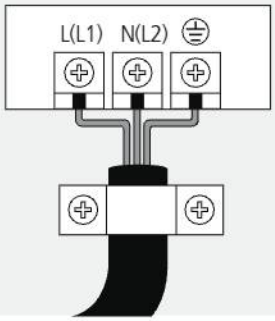

Connect the wires

4

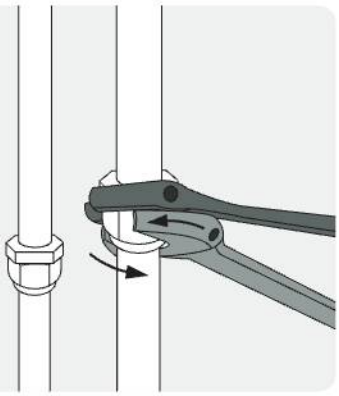

Connect the refrigerant pipes

7

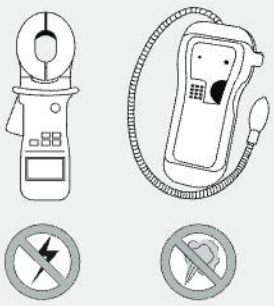

Perform a test run

PRODUCT OVERVIEW

NOTE ON ILLUSTRATIONS:

Illustrations in this manual are for explanatory purposes. The actual shape of your indoor unit may be slightly different. The actual shape shall prevail.
The installation must be performed in accordance with the requirement of local and national standards. The installation may be slightly different in different areas.

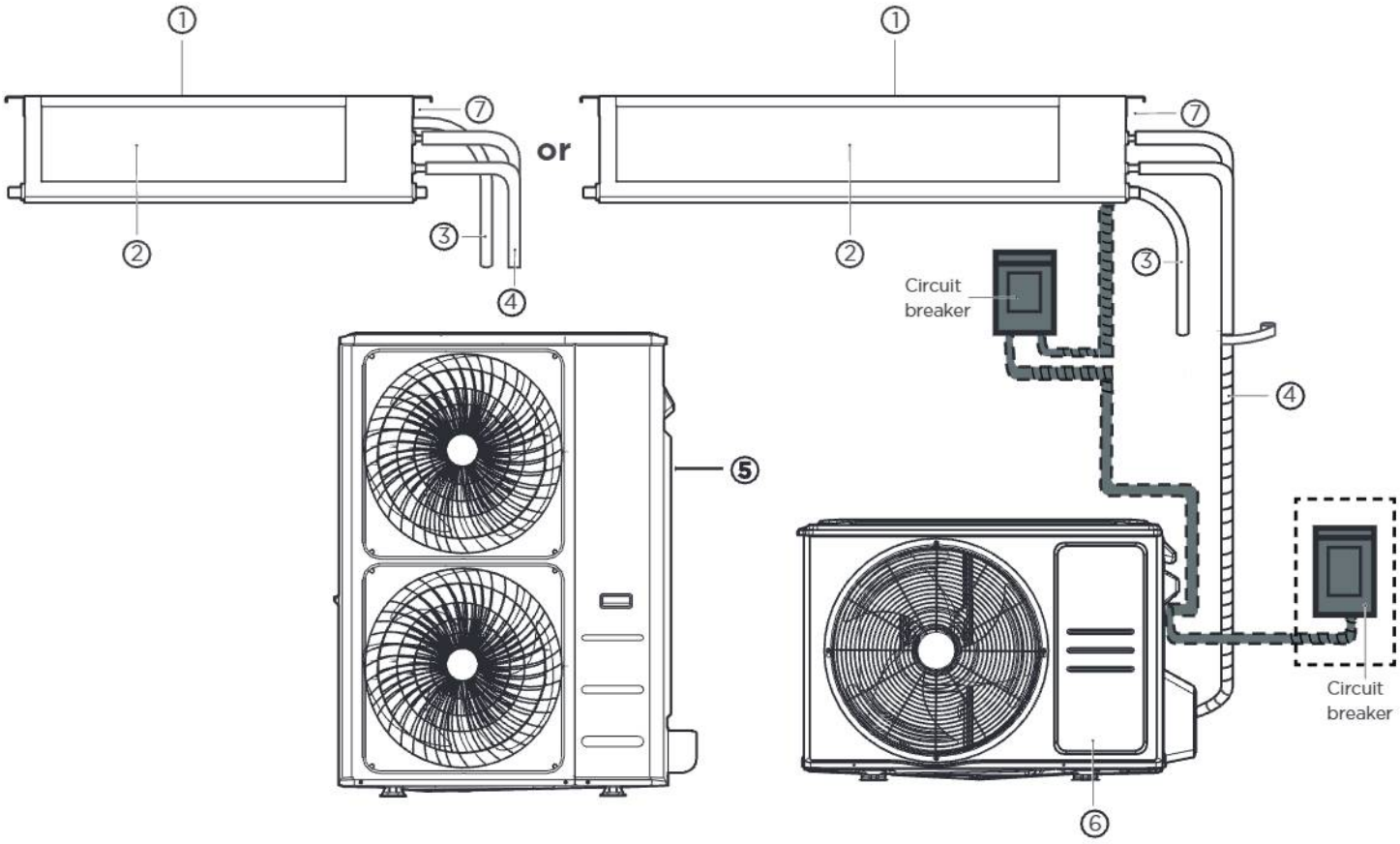

① Air inlet
② Air outlet
③ Drain pipe
④ Connecting pipe
⑤ Outdoor Unit (A)
⑥ Outdoor Unit (B)
⑦ Electric control cabinet

Install the Indoor Unit

1 Select installation location

NOTE

Before installing the indoor unit, you must choose an appropriate location. The following are standards that will help you choose an appropriate location for the unit.

Proper installation locations meet the following standards:



☑ Enough room exists for installation and maintenance.

☑ Enough room exists for the connecting the pipe and drainpipe.



☑ There is no direct radiation from heaters.



☑ The air inlet and outlet are not blocked.

☑ The airflow can fill the entire room.

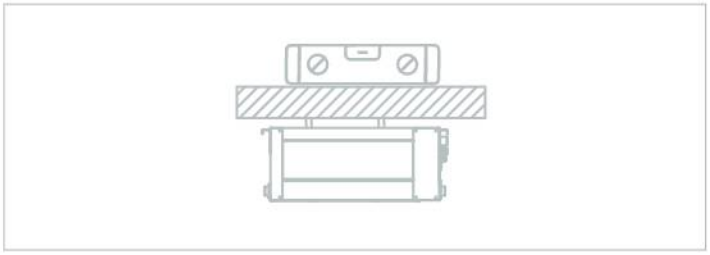

☑ The ceiling is horizontal and its structure can sustain the weight of the indoor unit.

For North America, models with a cooling capacity of 9000Btu to 18000Btu only apply to one room.

<u>DO NOT</u> install unit in the following locations:

- ⊘ Areas with oil drilling or fracking
- ⊘ Coastal areas with high salt content in the air
- ⊘ Areas with caustic gases in the air, such as hot springs
- ⊘ Areas that experience power fluctuations, such as factories
- ⊘ Enclosed spaces, such as cabinets
- ⊘ Kitchens that use natural gas
- ⊘ Areas with strong electromagnetic waves
- ⊘ Areas that store flammable materials or gas
- ⊘ Rooms with high humidity, such as bathrooms or laundry rooms

2 Confirm installation sizes

Installation place

The distance between the mounted indoor unit should meet the specifications illustrated in the following diagram.

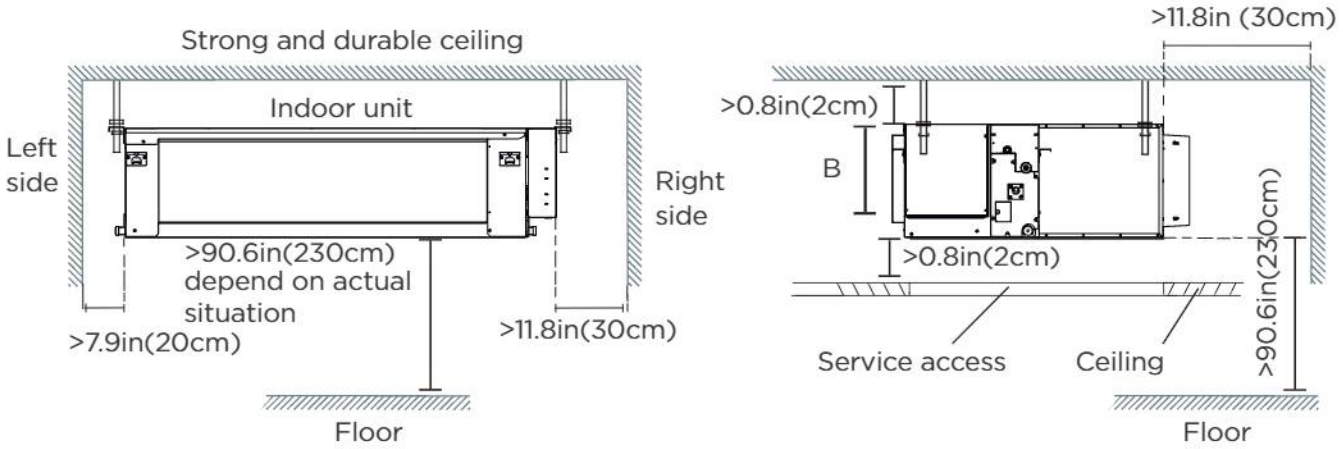

Maintenance space

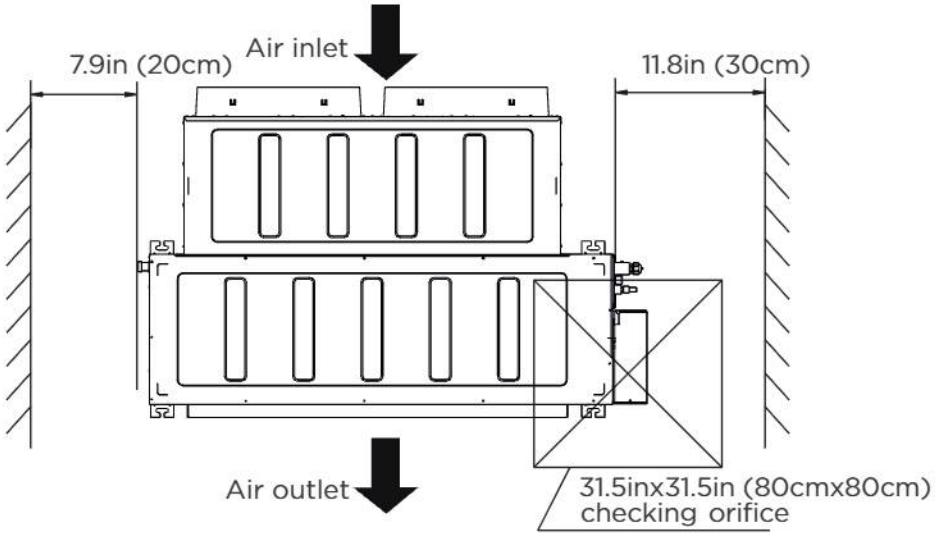

3 Separate and reassemble the indoor unit

⚠ **WARNING: Power should be disconnected and tagged off when performing the procedure when the unit is already installed.**
ATTENTION: Please separate the indoor only when necessary. Please disassemble and reassemble on a flat surface.

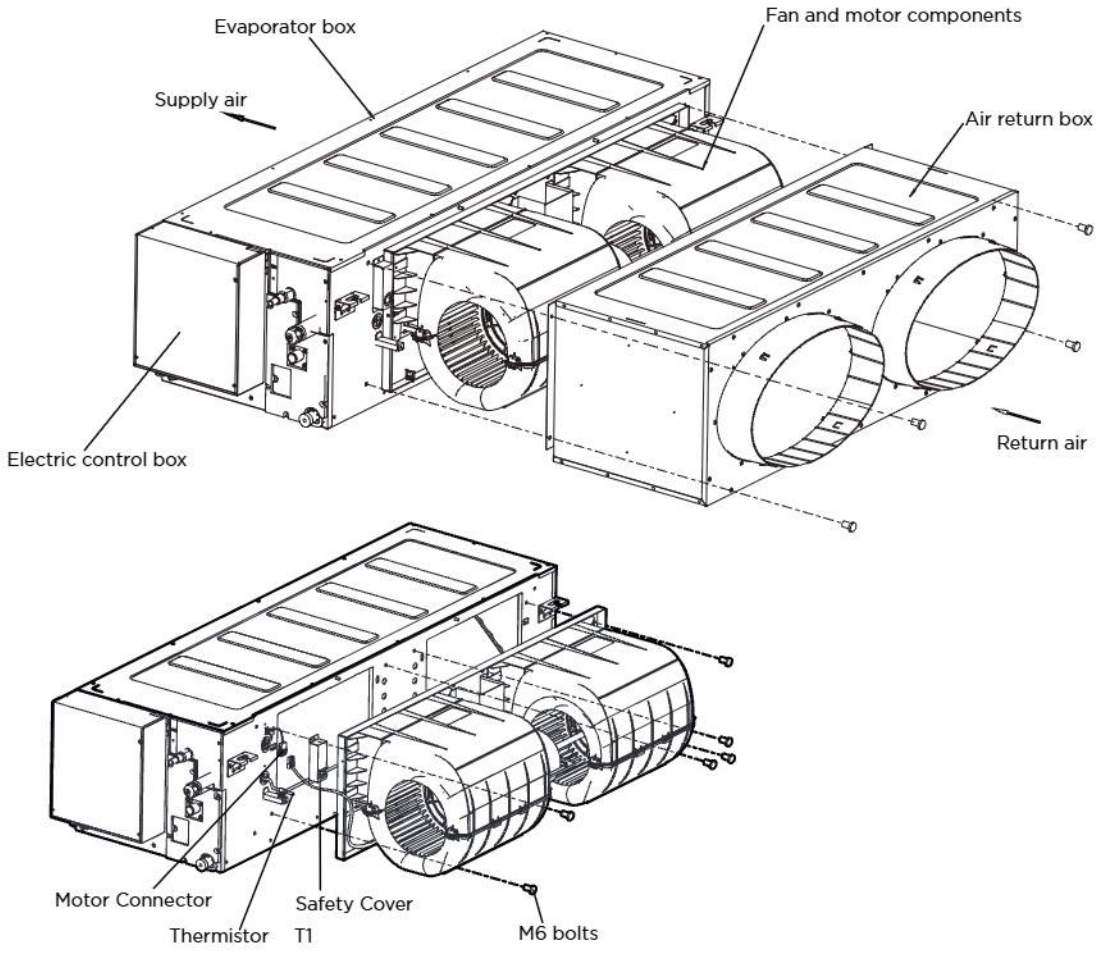

Separate the indoor unit in the following order.
1) Carefully remove the air return box by removing the 4 M6 bolts.
2) Carefully remove the safety cover by removing the 2 screws.
3) Carefully disconnect the fan motor wiring.
4) Remove 6 M6 bolts securing the fan and motor assembly on the Evaporator box.
5) Carefully separate the fan and motor assembly from the Evaporator box, taking care not to damage the fan motor wiring.

Reassemble the indoor unit in the following order.
6) Carefully connect the fan and motor assembly to the Evaporator box with 6 M6 bolts.
7) Reconnect the fan motor connector back to the connector of Evaporator Box.
8) Carefully fix the safety cover with 2 screws, taking care not to damage the connector and wiring.
9) Carefully fix the Return Air Box to the Evaporator Box with 4 M6 bolts.

⚠ **CAUTION**
It is necessary to check the Fan Motor Connector is connected properly before use.

4 Hang indoor unit

3.1. Please refer to the following diagrams to locate the four positioning screw bolt holes on the ceiling. Be sure to mark the places where you will drill ceiling hook holes.

Air outlet dimensions

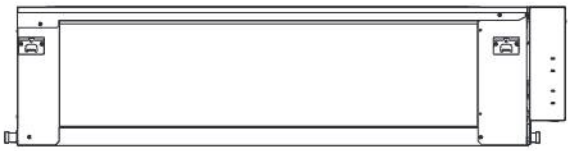

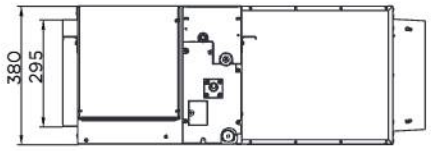

Air inlet dimensions

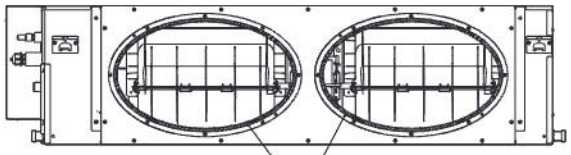

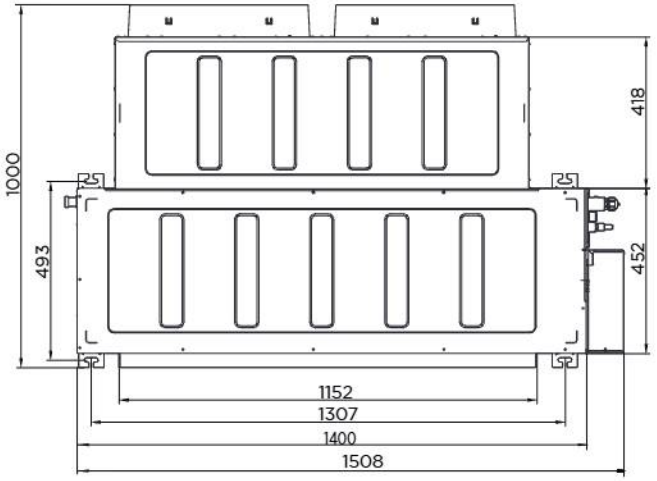

(unit: mm/inch)

3.2 Ceiling Bolt Installation Guidelines

1. Install and use the supporting steel angle.

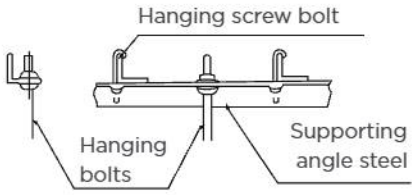

2. Install and fit pipes and wires after you have finished installing the main body. When choosing where to start, determine the direction of the pipes to be drawn out. Especially in cases where there is a ceiling involved, align the refrigerant pipes, drain pipes, and indoor and outdoor lines with their connection points before mounting the unit.
3. Install hanging screw bolts.
   - Cut off the roof beam.
   - Strengthen the point at which the cut was made. Consolidate the roof beam.
4. After you select an installation location, align the refrigerant pipes, drain pipes, as well as indoor and outdoor wires with their connection points before mounting the unit.
5. Drill 4 holes 10cm (4") deep at the ceiling hook positions in the internal ceiling. Be sure to hold the drill at a 90° angle to the ceiling.
6. Secure the bolt using the washers and nuts provided.
7. Install the four suspension bolts.

8. Mount the indoor unit with at least two people to lift and secure it. Insert suspension bolts into the unit's hanging holes. Fasten them using the washers and nuts provided.

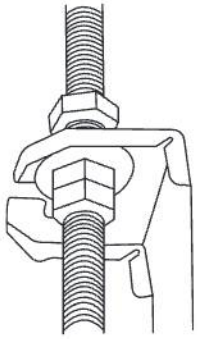

9. Position the indoor unit flat using a level indicator to prevent leaks.

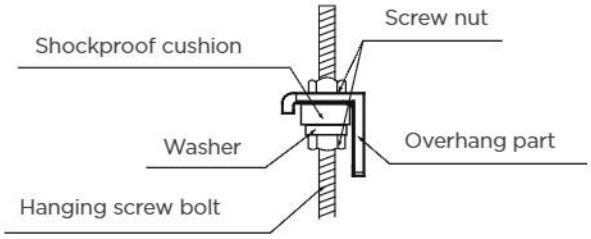

NOTE: Confirm the minimum drain tilt is 1/100 or more.

5 Duct and accessories installation

5.1 Duct

1. This indoor unit should be used with air outlet and air inlet ducts.
2. The air inlet and air outlet duct should be far enough apart enough to avoid air passage short-circuit.
3. Connect the duct according to the following diagrams.
4. Two oval return air openings are used to install round ducts.

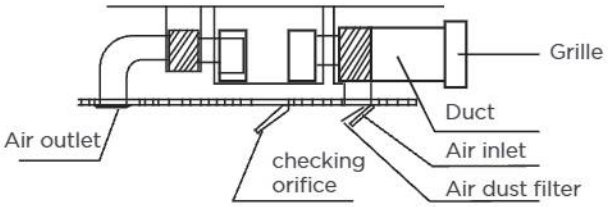

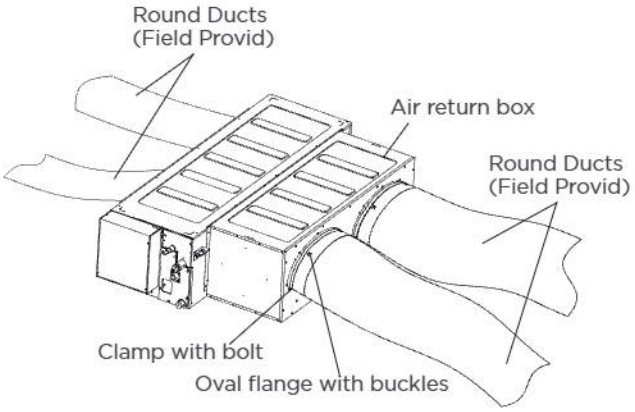

NOTE:

1. The min. length of the duct should be more than 1m, and fix on the air inlet opening.
2. Both the air outlet and the air return outlet require the installation of circular air ducts. The circular air ducts are sleeved on the oval flanges. The flange have several inverted buckles, which are used to hold the circular air ducts in place. Finally, the ducts must be fixed by Clamps with bolt.
3. Do not place the connecting duct weight on the indoor unit.
4. It is necessary to wrap insulation foam outside the duct to avoid condensate. An internal duct underlayer can be added to reduce noise if the user requires.

6 Motor and drain pump maintenance

1) Motor maintenance:

1. Take off the Air Return Box fixed by 4 bolts.
2. Take off the Safety Cover.
3. Disconnect the fan motor wiring.
4. Take off the fan and motor components fixed by 6 bolts;

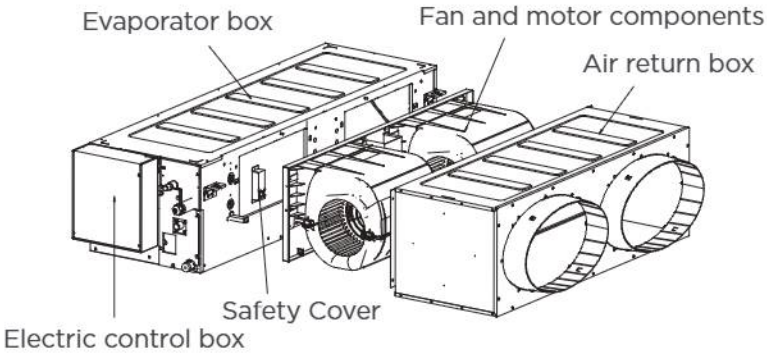

2) Pump maintenance:

1. Take off the Electric Control Box Cover.
2. Disconnect the Pump and Water Level Switch. Take off the Top Cover plate;
3. Remove 6 screws that fix Pump Subassembly, then the Pump Subassembly can be taken off;

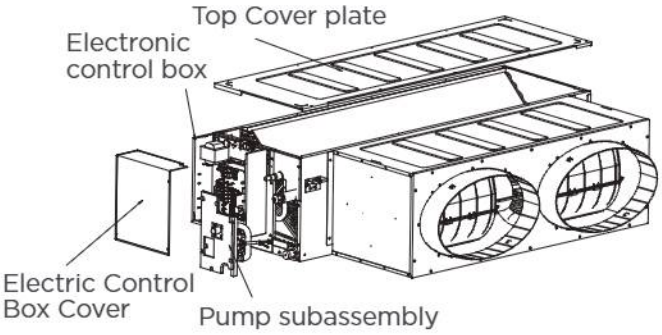

7 Drill wall hole for connective piping

1. Determine the location of the wall hole based on the location of the outdoor unit.
2. Using a 65mm (2.5in) or 90mm (3.54in) (depending on models) core drill, drill a hole in the wall. Make sure that the hole is drilled at a slight downward angle, so that the outdoor end of the hole is lower than the indoor end by about 12mm (0.5in). This will ensure proper water drainage.
3. Place the protective wall cuff in the hole. This protects the edges of the hole and will help seal it when you finish the installation process.

⚠ CAUTION

When drilling the wall hole, make sure to avoid wires, plumbing, and other sensitive components.

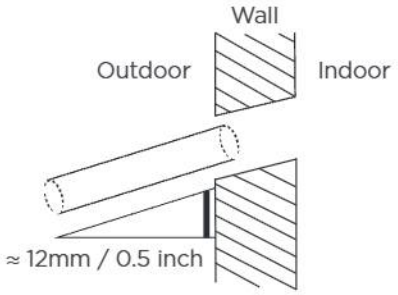

8 Connect drain hose

The drainpipe is used to drain water away from the unit. Improper installation may cause unit and property damage.

⚠ CAUTION

- Insulate all piping to prevent condensation, which could lead to water damage.
- If the drainpipe is bent or installed incorrectly, water may leak and cause a water-level switch malfunction.
- In HEAT mode, the outdoor unit will discharge water. Ensure that the drain hose is placed in an appropriate area to avoid water damage and slippage.
- DO NOT pull the drainpipe forcefully. This could disconnect it.

NOTE ON PURCHASING PIPES

Installation requires a polyethylene tube (exterior diameter = 3.7-3.9cm, interior diameter = 3.2cm), which can be obtained at your local hardware store or dealer.

Indoor Drainpipe Installation

Install the drainpipe as illustrated in the following Figure.

1. Cover the drainpipe with heat insulation to prevent condensation and leakage.
2. Attach the mouth of the drain hose to the unit's outlet pipe. Sheath the mouth of the hose and clip it firmly with a pipe clasp.
3. These units operate with a negative pressure at the drain connections and a drain trap is required. The trap needs to be installed as close to the unit as possible. Make sure the top of the trap is below the connection to the drain pan to allow complete drainage of the pan.

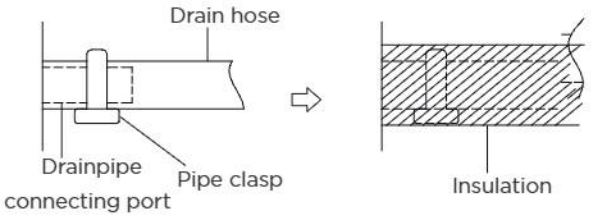

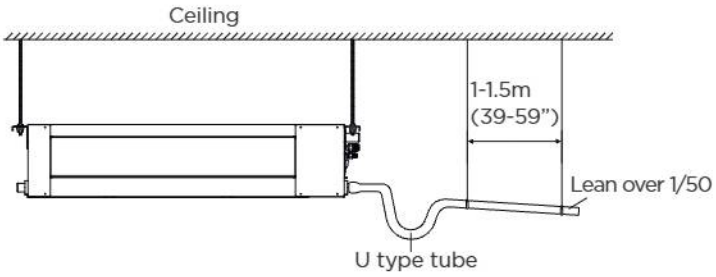

(Ceiling-mounted)

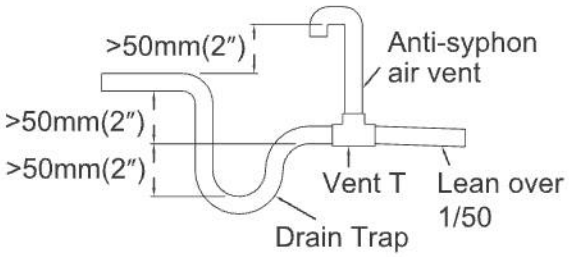

NOTE ON DRAINPIPE INSTALLATION

- When using an extended drainpipe, tighten the indoor connection with an additional protection tube. This prevents it from pulling loose.
- The drainpipe should slope downward at a gradient of at least 1/50 to prevent water from flowing back into the air conditioner.
- To prevent the pipe from sagging, space hanging wires every 1-1.5m (39-59").
- If the outlet of the drainpipe is higher than the body's pump joint, use a lift pipe for the indoor unit's exhaust outlet. The lift pipe must be installed no higher than 100cm (39.4") from the ceiling board. The distance between the unit and the lift pipe must be less than 20cm (7.9"). Incorrect installation could cause water to flow back into the unit and flood.
- To prevent air bubbles, keep the drain hose level or slightly tiled up (<75mm / 3").

Drainpipe installation for units with a pump

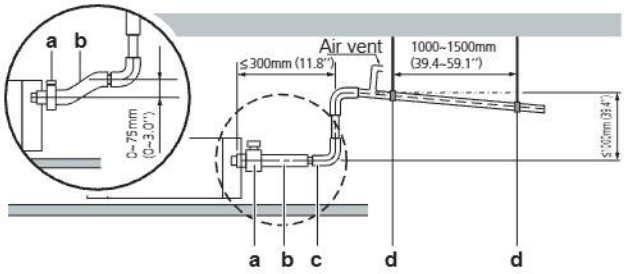

a Metal clamp (accessory)
b Drain hose (accessory)
c Rising drain piping (vinyl pipe of 25mm (0.98") nominal diameter and 32mm (1.26") outer diameter) (field supply)
d Hanging bars (field supply)

NOTE: When connecting multiple drainpipes, install the pipes as illustrated.

Units with a pump

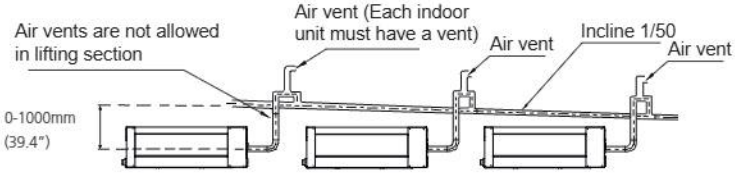

Units without a pump

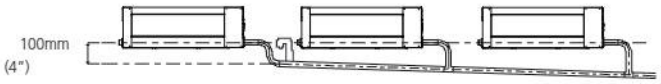

To check for water leaks

The procedure differs depending on whether electrical wiring is already finished. When electrical wiring is not finished yet, you need to temporarily connect the user interface and power supply to the unit.

When electrical wiring is not finished yet

1. Temporarily connect electrical wiring.
2. Remove the switch box cover (a).
3. Connect the single-phase power supply (50 Hz, 230 V) to connections No. 1 and No. 2 on the terminal block for power supply and earth.
4. **Reattach the switch box cover (a).**
5. Turn ON the power.
6. Start cooling operation.
7. Gradually pour approximately 1 l of water through the air discharge outlet, and check for leaks.

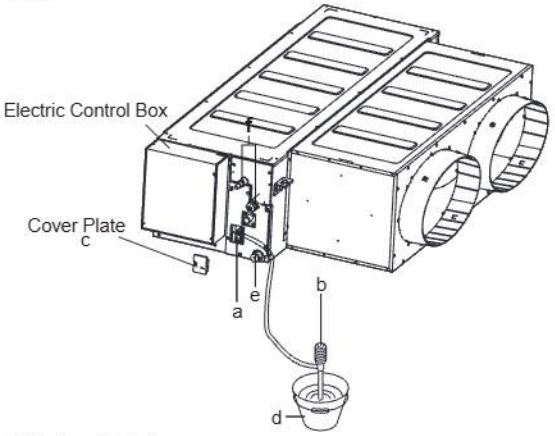

a Water inlet
b Portable pump
c Water inlet cover
d Bucket (adding water through water inlet)
e Drain outlet for maintenance
f Refrigerant pipes

8. Turn OFF the power.
9. Disconnect the electrical wiring.
10. Remove the control box cover.
11. Disconnect the power supply and earth.
12. Reattach the control box cover.

When electrical wiring is finished already

1. Start cooling operation.
2. Gradually pour approximately a liter of water through the air discharge outlet, and check for leaks.

Install Your Outdoor Unit

1 Select installation location

NOTE : PRIOR TO INSTALLATION

Before installing the outdoor unit, you must choose an appropriate location. The following are standards that will help you choose an appropriate location for the unit.

Proper installation locations meet the following standards:

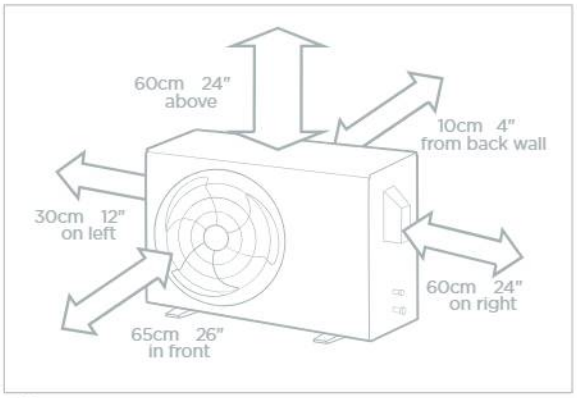

☑ Meets all spatial requirements shown in Installation Space Requirements above.



☑ Good air circulation and ventilation.



☑ Firm and solid—the location can support the unit and will not vibrate.



☑ Noise from the unit will not disturb other people.



☑ Protected from prolonged periods of direct sunlight or rain.



☑ Where snowfall is anticipated, take appropriate measures to prevent ice buildup and coil damage.

NOTE Install the unit by following local codes and regulations, there may be differ slightly between different regions.

⚠ CAUTION:

SPECIAL CONSIDERATIONS FOR EXTREME WEATHER

If the unit is exposed to heavy wind:

Install unit so that air outlet fan is at a 90° angle to the direction of the wind. If needed, build a barrier in front of the unit to protect it from extremely heavy winds. See Figures below.

If the unit is frequently exposed to heavy rain or snow:

Build a shelter above the unit to protect it from the rain or snow. Be careful not to obstruct air flow around the unit.

If the unit is frequently exposed to salty air (seaside):

Use outdoor unit that is specially designed to resist corrosion.

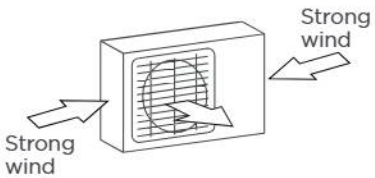

90° angle to the direction of the wind

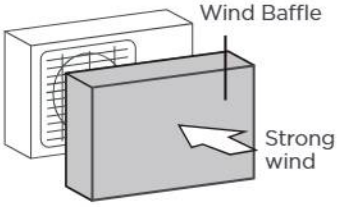

Build a wind Baffle to protect the unit

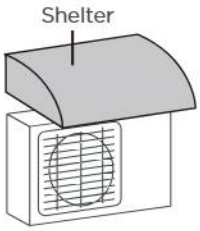

Build a shelter to protect the unit

DO NOT install unit in the following locations:

- ⊘ Near an obstacle that will block air inlets and outlets
- ⊘ Near a public street, crowded areas, or where noise from the unit will disturb others.
- ⊘ Near animals or plants that will be harmed by hot air discharge.
- ⊘ Near any source of combustible gas.
- ⊘ In a location that is exposed to large amounts of dust
- ⊘ In a location exposed to an excessive amounts of salty air.

2 Install drain joint (Heat pump unit only)

Before bolting the outdoor unit in place, you must install the drain joint at the bottom of the unit.

Note that there are two different types of drain joints depending on the type of outdoor unit.

If the drain joint comes with a rubber seal (see **Fig. A**), do the following:

1. Fit the rubber seal on the end of the drain joint that will connect to the outdoor unit.
2. Insert the drain joint into the hole in the base pan of the unit.
3. Rotate the drain joint 90° until it clicks in place facing the front of the unit.
4. Connect a drain hose extension (not included) to the drain joint to redirect water from the unit during heating mode.

If the drain joint doesn't come with a rubber seal (see **Fig. B**), do the following:

1. Insert the drain joint into the hole on the base pan, press firmly to ensure it is properly installed and will not become loose.
2. Connect a drain hose extension (not included) to the drain joint to redirect water from the unit during heating mode.

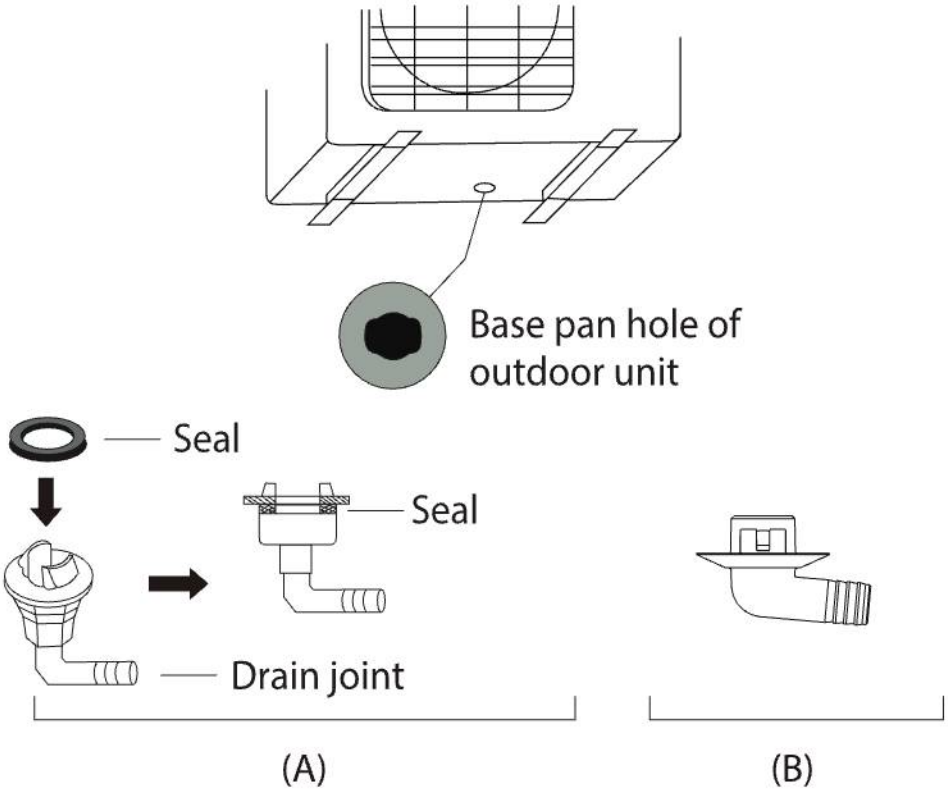

IN COLD CLIMATES

In cold climates, make sure that the drain hose is as vertical as possible to ensure swift water drainage. If water drains too slowly, it can freeze in the hose and flood the unit.

3 Anchor Outdoor Unit

⚠ WARNING

WHEN DRILLING INTO CONCRETE, EYE PROTECTION IS RECOMMENDED AT ALL TIME.

The outdoor unit can be anchored to the ground or to a wall-mounted bracket with bolt(M10). Prepare the installation base of the unit according to the dimensions below.

The following is a list of different outdoor unit sizes and the distance between their mounting feet. Prepare the installation base of the unit according to the dimensions below.

Outdoor Unit Types and Specifications (Split Type Outdoor Unit)

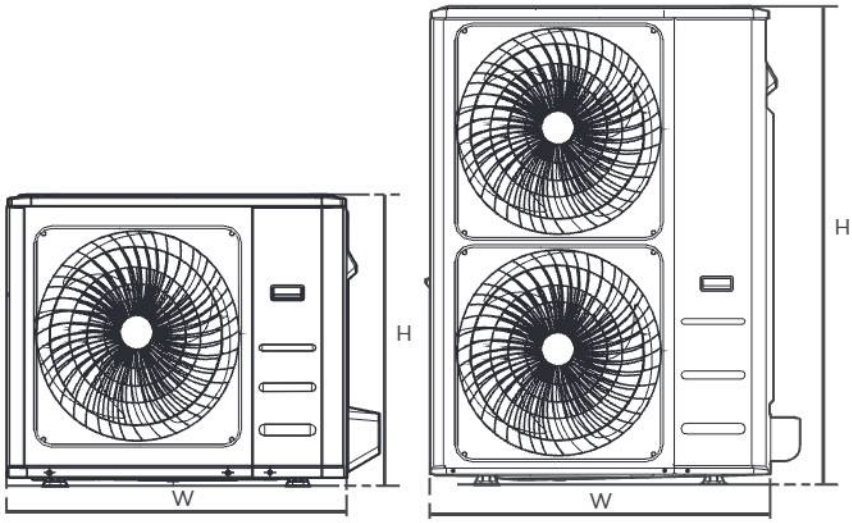

Front view

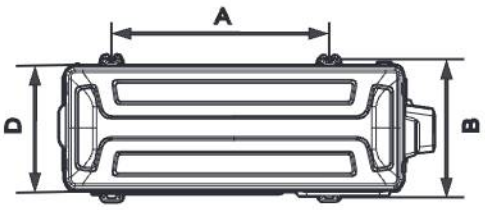

Top view

(unit: mm/inch)

Outdoor Unit Dimensions W x H x D	Mounting Dimensions	
	Distance A	Distance B
946x810x420 (37.24x31.9x16.53)	673 (26.5)	403 (15.87)
946x810x410 (37.24x31.9x16.14)	673 (26.5)	403 (15.87)
952x1333x410 (37.5x52.5x16.14)	634 (24.96)	404 (15.9)
952x1333x415 (37.5x52.5x16.34)	634 (24.96)	404 (15.9)
890x673x342 (35x26.5x13.46)	663 (26.1)	354 (13.94)
765x555x303 (30.1x21.8x11.9)	452 (17.8)	286(11.3)
805x554x330 (31.7x21.8x12.9)	511 (20.1)	317 (12.5)
770x555x300 (30.3x21.8x11.8)	487 (19.2)	298 (11.7)
980X975X415 (38.58X38.39X16.34)	616 (24.25)	397 (15.63)
980X975X410 (38.58X38.39X16.14)	616 (24.25)	397 (15.63)

Rows of series installation

The relations between H, A and L are as follows.

	L	A
L ≤ H	L ≤ 1/2H	25 cm / 9.8" or more
	1/2H < L ≤ H	30 cm / 11.8" or more
L > H	Cannot be installed	

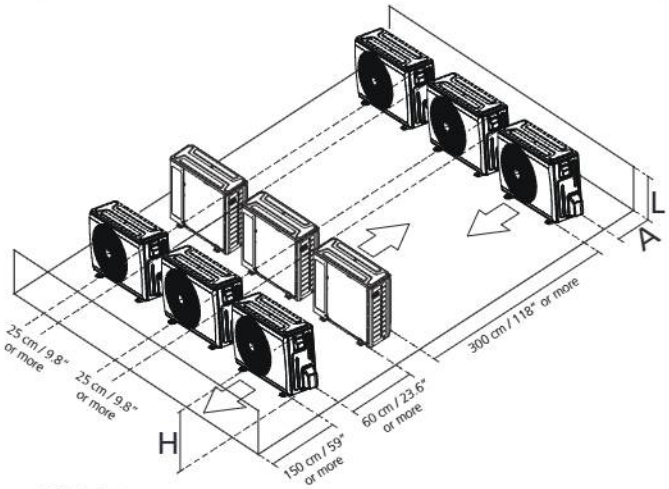

NOTE
H: Unit height
L: Height of the wall behind the unit
A: Distance between unit and wall

REFRIGERANT PIPING CONNECTION

When connecting refrigerant piping, **DO NOT** let substances or gases other than the specified refrigerant enter the unit. The presence of other gases or substances will lower the unit's capacity, and can cause abnormally high pressure in the refrigeration cycle. This can cause explosion and injury.

Notes on pipe length and elevation

The maximum length and drop height based on models. (Unit: m/ft.)

Type of model	Capacity (Btu/h)	Length of piping	Maximum drop height
North America, Australia and The EU frequency conversion split type	<15K	25/82	10/32.8
	15K-<24K	30/98.4	20/65.6
	24K-<36K	50/164	25/82
	36K-<60K	75/246	30/98.4
Other Split Type	12K	15/49	8/26
	18K-24K	25/82	15/49
	30K-36K	30/98.4	20/65.6
	42K-60K	50/164	30/98.4

Ensure that the length of the refrigerant pipe, the number of bends, and the drop height between the indoor and outdoor units meets the requirements shown in the table next to it

⚠ CAUTION

Oil traps

If oil flows back into the outdoor unit's compressor, this might cause liquid compression or deterioration of oil return. Oil traps in the rising gas piping can prevent this.

An oil trap should be installed every 6m (20ft) of vertical suction line riser (36000Btu/h unit). An oil trap should be installed every 10m (32.8ft) of vertical suction line riser (36000Btu/h unit).

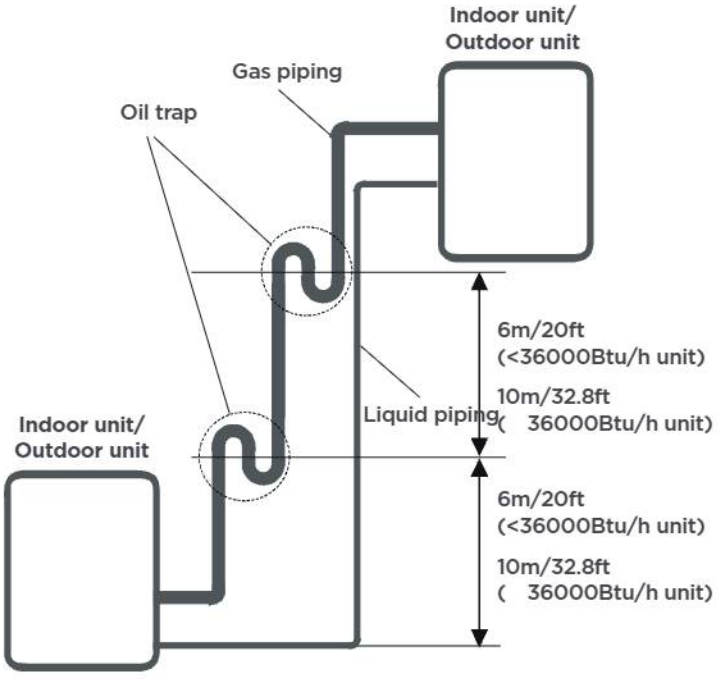

Connection Instructions—Refrigerant Piping

⚠ CAUTION

- The branching pipe must be installed horizontally. An angle of more than 10° may cause malfunction.
- **DO NOT** install the connecting pipe until both indoor and outdoor units have been installed.
- Insulate both the gas and liquid piping to prevent condensation.

Step 1: Cut pipes

When preparing refrigerant pipes, take extra care to cut and flare them properly. This will ensure efficient operation and minimize the need for future maintenance.

- Measure the distance between the indoor and outdoor units.
- Using a pipe cutter, cut the pipe a little longer than the measured distance.
- Make sure that the pipe is cut at a perfect 90° angle.

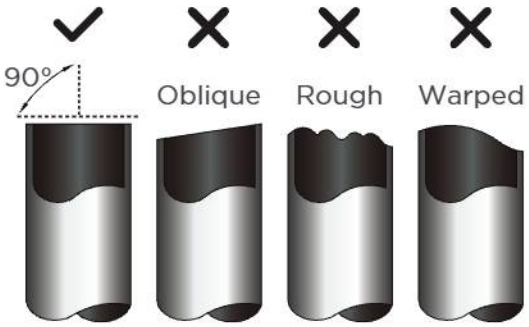

DO NOT DEFORM PIPE WHILE CUTTING

Be extra careful not to damage, dent, or deform the pipe while cutting. This will drastically reduce the heating

Step 2: Remove burrs

Burrs can affect the air-tight seal of refrigerant piping connection. They must be completely removed.

- Hold the pipe at a downward angle to prevent burrs from falling into the pipe.
- Using a reamer or deburring tool, remove all burrs from the cut section of the pipe.

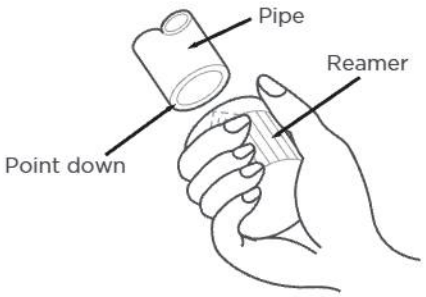

Step 3: Flare pipe ends

Proper flaring is essential to achieve an airtight seal.

- After removing burrs from cut pipe, seal the ends with PVC tape to prevent foreign materials from entering the pipe.
- Sheath the pipe with insulating material.
- Place flare nuts on both ends of pipe. Make sure they are facing in the right direction, because you can't put them on or change their direction after flaring.

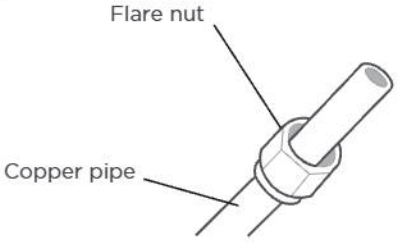

- Remove PVC tape from ends of pipe when ready to perform flaring work.

- Clamp flare from on the end of the pipe. The end of the pipe must extend beyond the flare form.

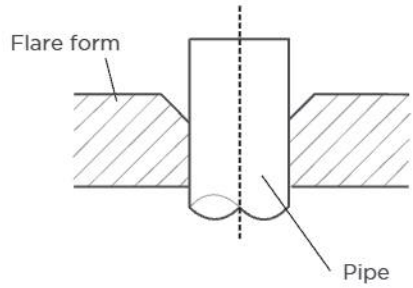

- Place flaring tool onto the form.
- Turn the handle of the flaring tool clockwise until the pipe is fully flared.

PIPING EXTENSION BEYOND FLARE FORM

Pipe gauge	Tightening torque	Flare dimension (A) (Unit: mm/Inch)		Flare shape
		Min.	Max.	
Ø6.35mm (Ø1/4 in)	18-20 N·m (180-200kgf.cm)	8.4/0.33	8.7/0.34	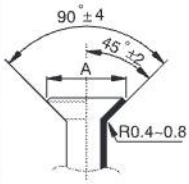
Ø9.52mm (Ø3/8in)	32-39 N·m (320-390kgf.cm)	13.2/0.52	13.5/0.53	
Ø12.7mm (Ø1/2in)	49-59 N·m (490-590kgf.cm)	16.2/0.64	16.5/0.65	
Ø16mm (Ø5/8in)	57-71 N·m (570-710kgf.cm)	19.2/0.76	19.7/0.78	
Ø19mm (Ø3/4in)	67-101 N·m (670-1010kgf.cm)	23.2/0.91	23.7/0.93	
Ø22mm (Ø7/8in)	85-110 N·m (850-1100kgf.cm)	26.4/1.04	26.9/1.06	

- Remove the flaring tool and flare form, then inspect the end of the pipe for cracks and even flaring.

Step 4: Connect pipes

Connect the copper pipes to the indoor unit first, then connect it to the outdoor unit. You should first connect the low-pressure pipe, then the high pressure pipe.

- When connecting the flare nuts, apply a thin coat of refrigeration oil to the flared ends of the pipes.
- Align the center of the two pipes that you will connect.
- Tighten the flare nut snugly by hand.
- Using a wrench, grip the nut on the unit tubing.
- While firmly gripping the nut, use a torque wrench to tighten the flare nut according to the torque values in above table.

NOTICE

Use both a spanner and a torque wrench when connecting or disconnecting pipes to/from the unit.

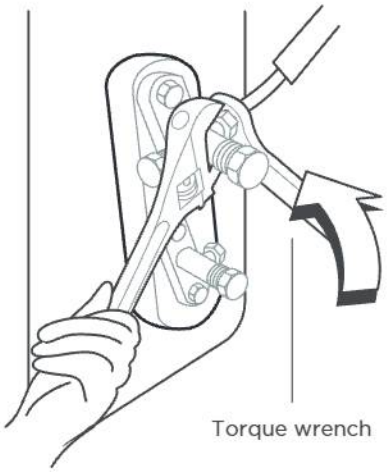

⚠ CAUTION

Ensure to wrap insulation around the piping. Direct contact with the bare piping may result in burns or frostbite.

- Make sure the pipe is properly connected. Over tightening may damage the bell mouth and under tightening may lead to leakage.

NOTICE

MINIMUM BEND RADIUS

Carefully bend the tubing in the middle according to the diagram below.

DO NOT bend the tubing more than 90° or more than 3 times.

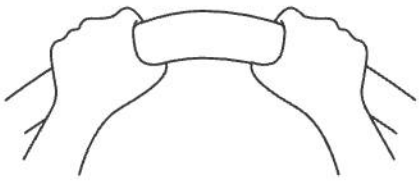

min-radius 10cm (3.9″)

- After connecting the copper pipes to the indoor unit, wrap the power cable, signal cable and the piping together with binding tape.

NOTICE

DO NOT intertwine signal cable with other wires. While bundling these items together. Do not intertwine or cross the signal cable with any other wiring.

WIRING PRECAUTIONS

⚠ WARNING

BEFORE PERFORMING ANY ELECTRICAL WORK, READ THESE WARNINGS.

All wiring must comply with local and national electrical codes, regulations and must be installed by a licensed electrician.
All electrical connections must be made according to the Electrical Connection Diagram located on the panels of the indoor and outdoor units.
If there is a serious safety issue with the power supply, stop work immediately. Explain your reasoning to the client, and refuse to install the unit until the safety issue is properly resolved.
Power voltage should be within 90-110% of rated voltage. Insufficient power supply can cause malfunction, electrical shock, or fire.
Installation of an external surge suppressor at the outdoor disconnect is recommended.
If connecting power to fixed wiring, a switch or circuit breaker that disconnects all poles and has a contact separation of at least 1/8in (3mm) must be incorporated in the fixed wiring. The qualified technician must use an approved circuit breaker or switch.
Only connect the unit to an individual branch circuit. Do not connect another appliance to that outlet.
Make sure to properly ground the air conditioner. Every wire must be firmly connected. Loose wiring can cause the terminal to overheat, resulting in product malfunction and possible fire.
Do not let wires touch or rest against refrigerant tubing, the compressor, or any moving parts within the unit.
If the unit has an auxiliary electric heater, it must be installed at least 1 meter (40in) away from any combustible materials.
To avoid getting an electric shock, never touch the electrical components soon after the power supply has been turned off. After turning off the power, always wait 10 minutes or more before you touch the electrical components.
Make sure that you do not cross your electrical wiring with your signal wiring. This may cause distortion, interference or possibly damage to circuit boards.
No other equipment should be connected to the same power circuit.
Connect the outdoor wires before connecting the indoor wires.

⚠ WARNING

BEFORE PERFORMING ANY ELECTRICAL OR WIRING WORK, TURN OFF THE MAIN POWER TO THE SYSTEM.

NOTE ON AIR SWITCH

When the maximum current of the air conditioner is more than 16A, an air switch or leakage protection switch with protective device shall be used (purchased separately). When the maximum current of the air conditioner is less than 16A, the power cord of air conditioner shall be equipped with plug (purchased separately). In North America,the appliance should be wired according to NEC and CEC requirements.

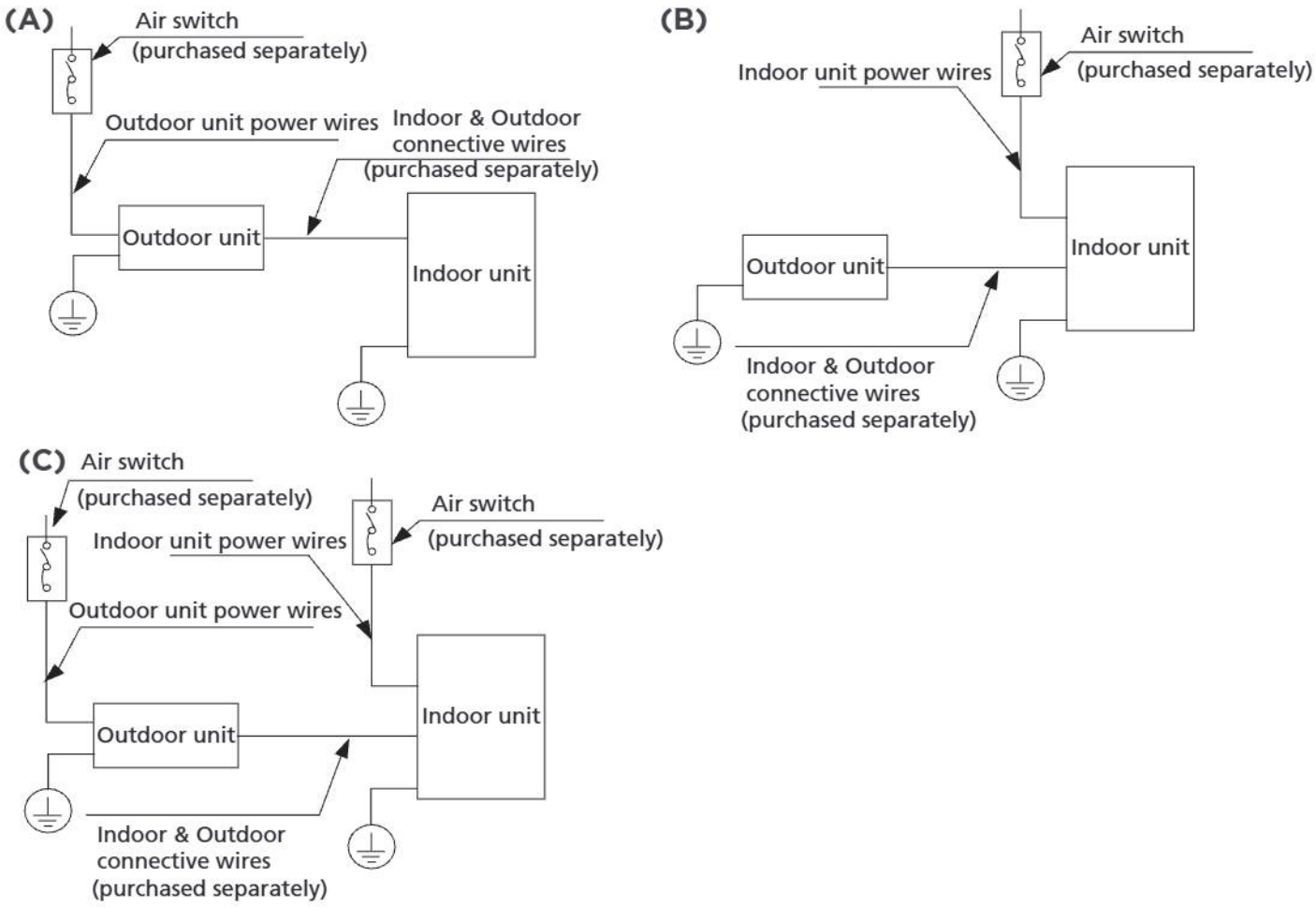

NOTE: The cographs are for explanation purpose only. Your machine may be slightly different. The actual shape shall prevail.

OUTDOOR UNIT WIRING

⚠ WARNING

Before performing any electrical or wiring work, turn off the main power to the system.

1. Prepare the cable for connection

a. You must first choose the right cable size. Be sure to use H07RN-F cables.

NOTE: In North America, choose the cable type according to the local electrical codes and regulations.

Minimum Cross-Sectional Area of Power and Signal Cables (For reference)

Rated Current of Appliance (A)	Nominal Cross-Sectional Area (mm^2)
> 3 and ≤ 6	0.75
> 6 and ≤ 10	1
> 10 and ≤ 16	1.5
> 16 and ≤ 25	2.5
> 25 and ≤ 32	4
> 32 and ≤ 40	6

CHOOSE THE RIGHT CABLE SIZE

The size of the power supply cable, signal cable, fuse, and switch needed is determined by the maximum current of the unit. The maximum current is indicated on the nameplate located on the side panel of the unit. Refer to this nameplate to choose the right cable, fuse, or switch.

NOTE: In North America, please choose the right cable size according to the Minimum Circuit Ampacity indicated on the nameplate of the unit.

b. Using wire strippers, strip the rubber jacket from both ends of the signal cable to reveal approximately 15cm (5.9") of wire.
c. Strip the insulation from the ends.
d. Using a wire crimper, crimp u-lugs on the ends.

NOTE: When connecting the wires, strictly follow the wiring diagram found inside the electrical box cover.

2. Remove the 2 screws fixed on the front panel and side panel, then take it down to perform wire connection (see the figure of outdoor unit A).
   Unscrew the electrical wiring cover and remove it. (see the figure of outdoor unit B)

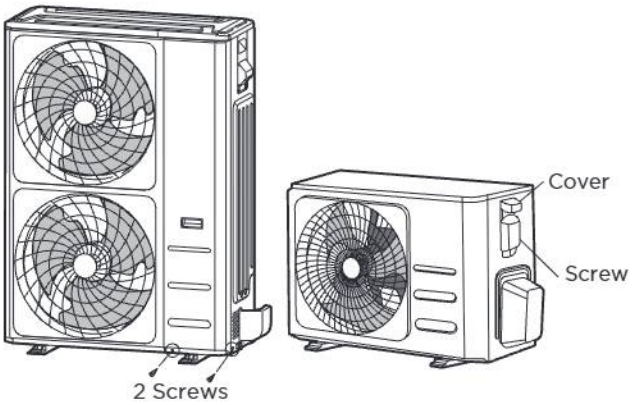

Outdoor Unit A Outdoor Unit B

3. Connect the u-lugs to the terminals
   Match the wire colors/labels with the labels on the terminal block. Firmly screw the u-lug of each wire to its corresponding terminal.
4. Clamp down the cable with the cable clamp.
5. Insulate unused wires with electrical tape. Keep them away from any electrical or metal parts.
6. Reinstall the cover of the electric control box.

Australia models

Please prepare spanner and flat-blade screwdriver before your installation work .

1. Remove two fixing screws, then remove the front panel.

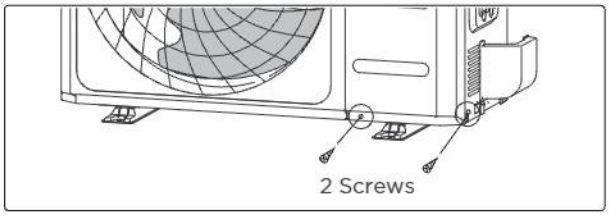

2. Use spanner and flat-blade screwdriver to knock down two metal seals, then pick the metal flakes out.

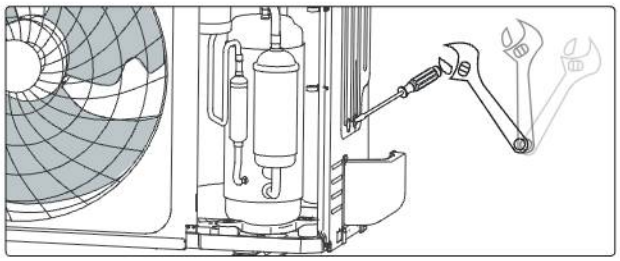

3. Connect the power cable and indoor & outdoor connection cable. Clamp down the cable with the cable clamp.
4. The wire groups shall be bound with cable ties and fixed on the right side plate after they are connected. The strong electric wire group and weak electric wire group shall be led out separately through the two knock down holes on the bottom of the right side plate and fastened with a locking connector as shown in the figure below.

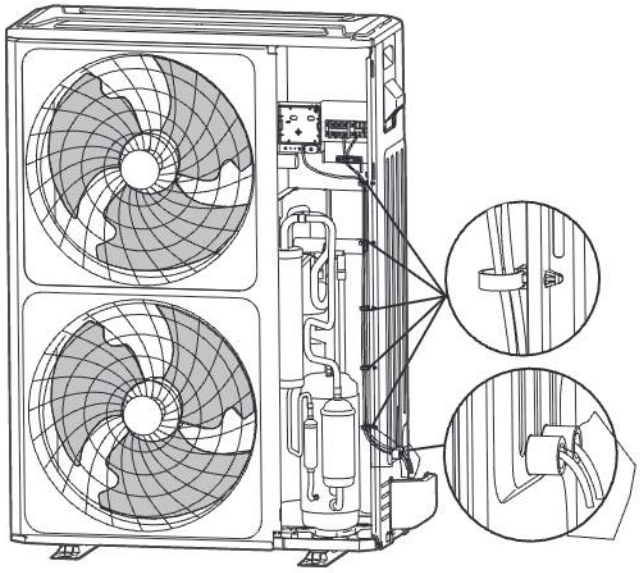

INDOOR UNIT WIRING

1. Prepare the cable for connection.
   a. Using wire strippers, strip the rubber jacket from both ends of the signal cable to reveal about 15cm (5.9") of the wire.
   b. Strip the insulation from the ends of the wires.
   c. Using a wire crimper, crimp the u-lugs to the ends of the wires.
2. Remove the cover of the electric control box on your indoor unit.
3. Connect the u-lugs to the terminals.

   Match the wire colors/labels with the labels on the terminal block. Firmly screw the u-lug of each wire to its corresponding terminal. Refer to the Serial Number and Wiring Diagram located on the cover of the electric control box.

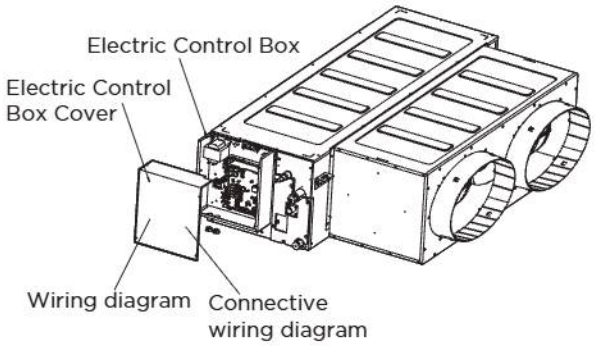

Magnetic ring (if supplied and packed with the accessories)

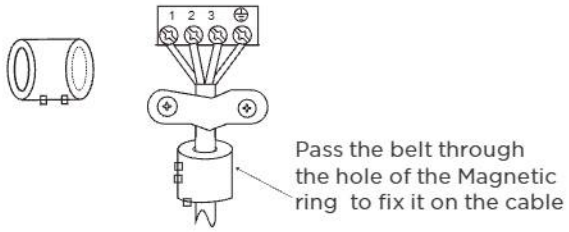

⚠ CAUTION

- While connecting the wires, please strictly follow the wiring diagram.
- The refrigerant circuit can become very hot. Keep the interconnection cable away from the copper tube.

4. Clamp down the cable with the cable clamp. The cable must not be loose or pull on the u-lugs.
5. Wires need to be fixed by Clip or Locking joints with thread adhesive.

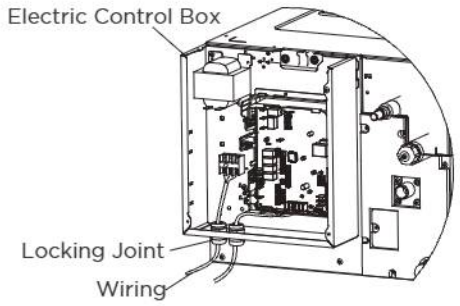

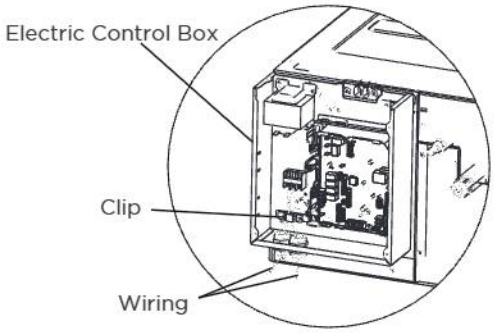

NOTE:
Wires must be fixed firmly, and be armed with protective sleeves before use.

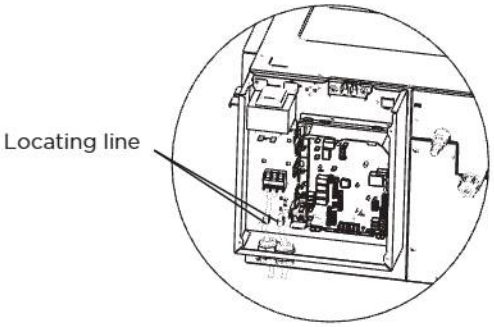

6. Reattach the electric box cover. Before installing the electric control box cover, remove the rubber plug on it.
7. If the indoor unit is equipped with a display box, it needs to be realistic and installed in the electric control box.

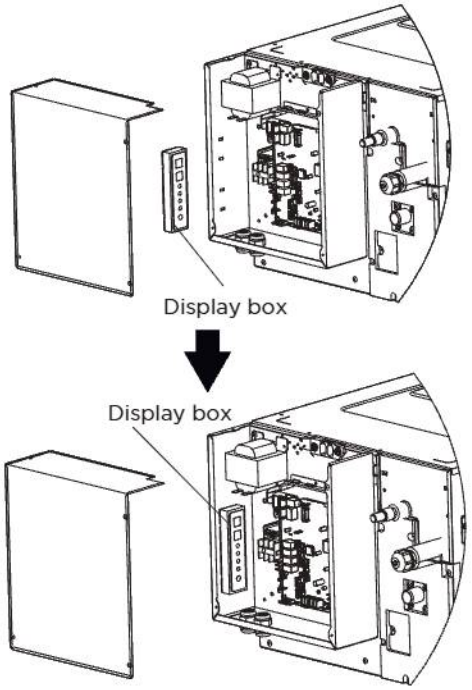

Power Specifications (Not applicable for North America)

NOTE

Electric auxiliary heating type circuit breaker/fuse need to add more than 10 A. The circuit breaker/fuse specification shall be subject to the unit nameplate. (Applicable for Australian model)

Indoor Power Supply Specifications

MODEL (Btu/h)		≤18K	19K~24K	25K~36K	37K~48K	49K~60K
POWER	PHASE	1 Phase	1 Phase	1 Phase	1 Phase	1 Phase
	VOLT	208-240V	208-240V	208-240V	208-240V	208-240V
CIRCUIT BREAKER/ FUSE (A)		25/20	32/25	50/40	70/55	70/60

MODEL (Btu/h)		≤36K	37K~60K	≤36K	37K~60K
POWER	PHASE	3 Phase	3 Phase	3 Phase	3 Phase
	VOLT	380-420V	380-420V	208-240V	208-240V
CIRCUIT BREAKER/FUSE (A)		25/20	32/25	32/25	45/35

Outdoor Power Supply Specifications

MODEL (Btu/h)		≤18K	19K~24K	25K~36K	37K~48K	49K~60K
POWER	PHASE	1 Phase	1 Phase	1 Phase	1 Phase	1 Phase
	VOLT	208-240V	208-240V	208-240V	208-240V	208-240V
CIRCUIT BREAKER/ FUSE (A)		25/20	32/25	50/40	70/55	70/60

MODEL (Btu/h)		≤36K	37K~60K	≤36K	37K~60K
POWER	PHASE	3 Phase	3 Phase	3 Phase	3 Phase
	VOLT	380-420V	380-420V	208-240V	208-240V
CIRCUIT BREAKER/FUSE (A)		25/20	32/25	32/25	45/35

Independent Power Supply Specifications

MODEL (Btu/h)		≤18K	19K~24K	25K~36K	37K~48K	49K~60K
POWER (indoor)	PHASE	1 Phase	1 Phase	1 Phase	1 Phase	1 Phase
	VOLT	208-240V	208-240V	208-240V	208-240V	208-240V
CIRCUIT BREAKER/ FUSE (A)		15/10	15/10	15/10	15/10	15/10
POWER (outdoor)	PHASE	1 Phase	1 Phase	1 Phase	1 Phase	1 Phase
	VOLT	208-240V	208-240V	208-240V	208-240V	208-240V
CIRCUIT BREAKER/ FUSE (A)		25/20	32/25	50/40	70/55	70/60

MODEL (Btu/h)		≤36K	37K~60K	≤36K	37K~60K
POWER (indoor)	PHASE	1 Phase	1 Phase	1 Phase	1 Phase
	VOLT	208-240V	208-240V	208-240V	208-240V
CIRCUIT BREAKER/FUSE (A)		15/10	15/10	15/10	15/10
POWER (outdoor)	PHASE	3 Phase	3 Phase	3 Phase	3 Phase
	VOLT	380-420V	380-420V	208-240V	208-240V
CIRCUIT BREAKER/FUSE (A)		25/20	32/25	32/25	45/35

Inverter Type A/C Power Specifications

MODEL (Btu/h)		≤18K	19K~24K	25K~36K	37K~48K	49K~60K
POWER (indoor)	PHASE	1 Phase	1 Phase	1 Phase	1 Phase	1 Phase
	VOLT	220-240V	220-240V	220-240V	220-240V	220-240V
CIRCUIT BREAKER/ FUSE (A)		15/10	15/10	15/10	15/10	15/10
POWER (outdoor)	PHASE	1 Phase	1 Phase	1 Phase	1 Phase	1 Phase
	VOLT	208-240V	208-240V	208-240V	208-240V	208-240V
CIRCUIT BREAKER/ FUSE (A)		25/20	25/20	40/30	50/40	50/40

MODEL (Btu/h)		≤36K	37K~60K	≤36K	37K~60K
POWER (indoor)	PHASE	1 Phase	1 Phase	1 Phase	1 Phase
	VOLT	220-240V	220-240V	220-240V	220-240V
CIRCUIT BREAKER/FUSE (A)		15/10	15/10	15/10	15/10
POWER (outdoor)	PHASE	3 Phase	3 Phase	3 Phase	3 Phase
	VOLT	380-420V	380-420V	208-240V	208-240V
CIRCUIT BREAKER/FUSE (A)		25/20	32/25	32/25	40/30

AIR EVACUATION

NOTE

When opening valve stems, turn the hexagonal wrench until it hits against the stopper. Do not try to force the valve to open further.

Preparations and precautions

Air and foreign matter in the refrigerant circuit can cause abnormal rises in pressure, which can damage the air conditioner, reduce its efficiency, and cause injury. Use a vacuum pump and manifold gauge to evacuate the refrigerant circuit, removing any non-condensable gas and moisture from the system. Evacuation should be performed upon initial installation and when unit is relocated.

BEFORE PERFORMING EVACUATION

- ☑ Check to make sure the connective pipes between the indoor and outdoor units are connected properly .
- ☑ Check to make sure all wiring is connected properly.

Evacuation Instructions

1. Connect the charge hose of the manifold gauge to service port on the outdoor unit's low pressure valve.
2. Connect another charge hose from the manifold gauge to the vacuum pump.
3. Open the Low Pressure side of the manifold gauge. Keep the High Pressure side closed.
4. Turn on the vacuum pump to evacuate the system.
5. Run the vacuum for at least 15 minutes, or until the Compound Meter reads -76cmHG (-10^5Pa).

Outdoor unit

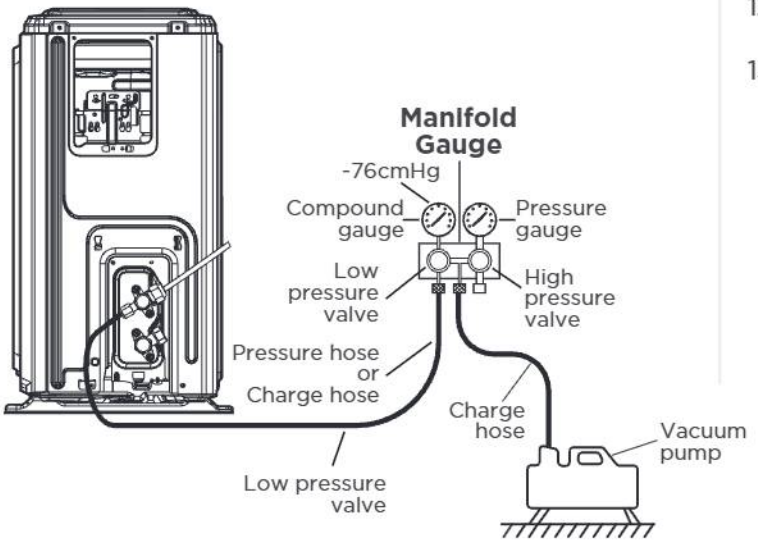

6. Close the Low Pressure side of the manifold gauge, and turn off the vacuum pump.
7. Wait for 5 minutes, then check that there has been no change in system pressure.
8. If there is a change in system pressure, refer to Gas Leak Check section for information on how to check for leaks. If there is no change in system pressure, unscrew the cap from the packed valve (high pressure valve).
9. Insert hexagonal wrench into the packed valve (high pressure valve) and open the valve by turning the wrench in a 1/4 counterclockwise turn. Listen for gas to exit the system, then close the valve after 5 seconds.
10. Watch the Pressure Gauge for one minute to make sure that there is no change in pressure. The Pressure Gauge should read slightly higher than atmospheric pressure.
11. Remove the charge hose from the service port.

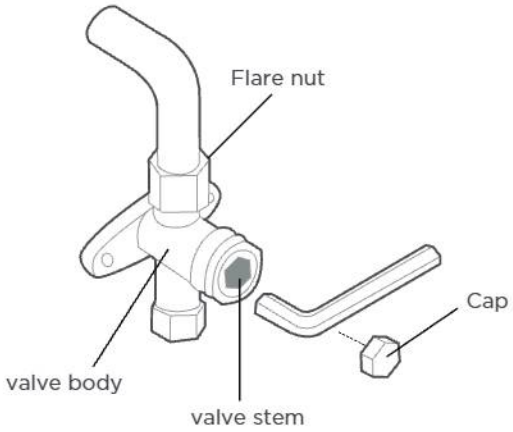

12. Using hexagonal wrench, fully open both the high pressure and low pressure valves.
13. Tighten valve caps on all three valves (service port, high pressure, low pressure) by hand. You may tighten it further using a torque wrench if needed.

NOTE ON ADDING REFRIGERANT

⚠ CAUTION

DO NOT mix refrigerant types.

Some systems require additional charging depending on pipe lengths. The standard pipe length varies according to local regulations. For example, in North America, the standard pipe length is 7.5m (25ft). In other areas, the standard pipe length is 5m (16ft). The refrigerant should be charged from the service port on the outdoor unit's low pressure valve. The additional refrigerant to be charged can be calculated using the following formula:

Refrigerant	Liquid Side Diameter		
	Ø6.35mm (Ø1/4in)	Ø9.52mm (Ø3/8in)	Ø12.7mm (Ø1/2in)
R22 (orifice tube in the indoor unit):	(Total pipe length - standard pipe length) x 30g (0.32oz)/m (ft)	(Total pipe length - standard pipe length) x 65g (0.69oz)/m (ft)	(Total pipe length - standard pipe length) x 115g (1.23oz)/m (ft)
R22 (orifice tube in the outdoor unit):	(Total pipe length - standard pipe length) x15g (0.16oz)/m (ft)	(Total pipe length - standard pipe length) x30 (0.32oz)/m (ft)	(Total pipe length - standard pipe length) x60g (0.64oz)/m (ft)
R410A: (orifice tube in the indoor unit):	(Total pipe length - standard pipe length) x30g (0.32oz)/m (ft)	(Total pipe length - standard pipe length) x65g (0.69oz)/m (ft)	(Total pipe length - standard pipe length) x115g (1.23oz)/m (ft)
R410A: (orifice tube in the outdoor unit):	(Total pipe length - standard pipe length) x15g (0.16oz)/m (ft)	(Total pipe length - standard pipe length) x30g (0.32oz)/m (ft)	(Total pipe length - standard pipe length) x65g (0.69oz)/m (ft)
R32 :	(Total pipe length - standard pipe length) x 12g (0.13oz)/m (ft)	(Total pipe length - standard pipe length) x 24g (0.26oz)/m (ft)	(Total pipe length - standard pipe length) x 40g (0.42oz)/m (ft)

⚠ CAUTION **DO NOT** mix refrigerant types.

Only for Australia models:

- This unit contains factory charged refrigerant covering 20m of refrigerant piping and additional refrigerant charge on the installation site is not required for an installation with up to 20m refrigerant piping. When refrigerant piping exceeds 20m, additionally charge an amount calculated from the pipe length and the above table for the portion in excess of 20m.
- If an existing pipe system is used, a required refrigerant charge volume will vary depending on the liquid pipe size.

  Formula to calculate the volume of additional refrigerant required

  Additional charge volume (kg) = {Main length (m) – Factory charged volume 20 (m) } × 0.03 (kg/m)
- Make sure to remove the additional refrigerant amount according to the nameplate rated charge (under 5m refrigerant piping) under market or government verification testing.

TEST RUN

⚠ CAUTION

Failure to perform the test run may result in unit damage, property damage, or personal injury.

Before test run

A test run must be performed after the entire system has been completely installed. Confirm the following points before performing the test:
a) Indoor and outdoor units are properly installed.
b) Piping and wiring are properly connected.
c) No obstacles near the inlet and outlet of the unit that might cause poor performance or product malfunction.
d) Refrigeration system does not leak.
e) Drainage system is unimpeded and draining to a safe location.
f) Heating insulation is properly installed.
g) Grounding wires are properly connected.
h) Length of the piping and additional refrigerant capacity have been recorded.
i) Power voltage is the correct voltage for the air conditioner

Test Run Instructions

1. Open both the liquid and gas stop valves.
2. Turn on the main power switch and allow the unit to warm up.
3. Set the air conditioner to COOL mode.
4. For the Indoor Unit
   a. Ensure the remote control and its buttons work properly.
   b. Ensure the louvers move properly and can be changed using the remote control.
   c. Double check to see if the room temperature is being registered correctly.
   d. Ensure the indicators on the remote control and the display panel on the indoor unit work properly.
   e. Ensure the manual buttons on the indoor unit works properly.
   f. Check to see that the drainage system is unimpeded and draining smoothly.
   g. Ensure there is no vibration or abnormal noise during operation.
5. For the Outdoor Unit
   a. Check to see if the refrigeration system is leaking.
   b. Make sure there is no vibration or abnormal noise during operation.
   c. Ensure the wind, noise, and water generated by the unit do not disturb your neighbors or pose a safety hazard.
6. Drainage Test
   a. Ensure the drainpipe flows smoothly. New buildings should perform this test before finishing the ceiling.
   b. Remove the test cover. Add 2,000ml of water to the tank through the attached tube.
   c. Turn on the main power switch and run the air conditioner in COOL mode.
   d. Listen to the sound of the drain pump to see if it makes any unusual noises.
   e. Check to see that the water is discharged. It may take up to one minute before the unit begins to drain depending on the drainpipe.
   f. Make sure that there are no leaks in any of the piping.
   g. Stop the air conditioner. Turn off the main power switch and reinstall the test cover.

NOTE: If the unit malfunctions or does not operate according to your expectations, please refer to the Troubleshooting section of the Owner's Manual before calling customer service.

COMMISSION

The indoor ducted units can be programmed for different static pressures or Real-time constant airflows, Use the following steps to set the static pressure or Real-time constant airflow.

WHEN USING THE 120L WIRED CONTROLLER

To set Static Pressure airflow

The factory default setting is SP1, the external static pressure can be manually changed to the fan curves 1,2,3,4,5,6,7,8.

a. Press and hold ON/OFF and FAN for approximately 7 seconds.
b. Press "" r "" t scroll through the menu and select " 8 ".
c. Press and hold ON/OFF for approximately 2 seconds , Press "" r "" t croll through and select " 1-8 ".
d. Press " " or " OK " and the display board displays " CS "
e. Press and hold ON/OFF and FAN for approximately 7 seconds, then exit test mode.

To set Real-time constant airflow

Use the Automatic Airflow " AF " Adjustment function to realize Real-time constant airflows.

a. Press and hold ON/OFF and FAN for approximately 7 seconds.
b. Press "" r "" t scroll through the menu and select " 8 ".
c. Press and hold ON/OFF for approximately 2 seconds , Press "" r "" t scroll through and select " AF ".
d. Press " " or " OK " and the display board displays " CS ".
e. Press and hold ON/OFF and FAN for approximately 7 seconds , then exit test mode.

NOTE : Before commissioning, check the power connection of the machine, turn on the power, and keep the machine not working.
NOTE : If there is no change after airflow adjustment, perform the setting again.
NOTE : Low static pressure series 9K,12K,18K models, SP options can only be " 14 ".

WHEN USING THE 120N WIRED CONTROLLER

To set Static Pressure airflow

The factory default setting is SP1, the external static pressure can be manually changed to the fan curves 1,2,3,4,5,6,7,8.

a. Press and hold Copy for approximately 3 seconds, The lower right corner shows P:00, Press " OK ".
b. Press "" o scroll through the menu , The lower right corner shows SP, Press " OK ".
c. Press "" t scroll through the menu and select "1-8", Press " OK ".
d. Press "Back" to exit test mode.

To set Real-time constant airflow

Use the Automatic Airflow " AF " Adjustment function to realize Real-time constant airflows.

a. Press and hold Copy for approximately 3 seconds , The lower right corner shows P:00, Press " OK ".
b. Press "" to scroll through the menu , The lower right corner shows AF, Press " OK ".
c. Press "Back" to exit test mode.

NOTE: T1, T2, T2b, T3, T4 are sub-menus for thermistors. DO NOT select to set the external static pressure.
NOTE : Before commissioning, check the power connection of the machine, turn on the power, and keep the machine not working.
NOTE : If there is no change after airflow adjustment, perform the setting again.
NOTE : Setting Static Pressure or Automatic Airflow need to use the Wired Remote Controller.
NOTE : Low static pressure series 6K,9K,12K,18K models, SP options can only be " 14 ".

PACKING AND UNPACKING THE UNIT

Instructions for packing unpacking the unit:

Unpacking:
Indoor unit:
1. Cut the packing belt.
2. Unpack the package.
3. Take out the packing cushion and packing support.
4. Remove the packing film.
5. Take out the accessories.
6. Lift the machine out and lay it flat.

Outdoor Unit
1. Cut the packing belt.
2. Take the unit out of the package.
3. Remove the foam from the unit.
4. Remove the packing film from the unit.

Packing:
Indoor unit:
1. Put the indoor unit into the packing film.
2. Put the accessories in.
3. Place the packing cushion and packing support.
4. Put the indoor unit into the package.
5. Close the package and seal it.
6. Using the packing belt if necessary.

Outdoor unit:
1. Put the outdoor unit into the packing film.
2. Put the bottom foam into the box.
3. Put the outdoor unit into the package, then put the upper packaging foam on the unit.
4. Close the package and seal it.
5. Using the packing belt if necessary.

NOTE: Please keep all packaging items if you may need in the future.

TRADEMARKS, COPYRIGHTS AND LEGAL STATEMENT

Midea logo, word marks, trade name, trade dress and all versions thereof are valuable assets of Midea Group and/or its affiliates ("Midea"), to which Midea owns trademarks, copyrights and other intellectual property rights, and all goodwill derived from using any part of an Midea trademark. Use of Midea trademark for commercial purposes without the prior written consent of Midea may constitute trademark infringement or unfair competition in violation of relevant laws.

This manual is created by Midea and Midea reserves all copyrights thereof. No entity or individual may use, duplicate, modify, distribute in whole or in part this manual, or bundle or sell with other products without the prior written consent of Midea.

All the described functions and instructions were up to date at the time of printing this manual. However, the actual product may vary due to improved functions and designs.

DISPOSAL AND RECYCLING

Important instructions for environment(European Disposal Guidelines)

Compliance with the WEEE Directive and Disposing of the Waster Product:
This product complies with EU WEEE Directive. This product bears a classification symbol for waster electrical and electronic equipment (WEEE).

This symbol indicates that this product shall not be disposed with other household wastes at the end of its service life. Used device must be returned to official collection point for recycling of electrical electronic devices. To find these collection systems please contact to your local authorities or retailer where the product was purchased. Each household performs important role in recovering and recycling of old appliance. Appropriate disposal of used appliance helps prevent potential negative consequences for the environment and human health.



DATA PROTECTION NOTICE

For the provision of the services agreed with the customer,
we agree to comply without restriction with all stipulations of applicable data protection law, in line with agreed countries within which services to the customer will be delivered, as well as, where applicable, the EU General Data Protection Regulation (GDPR).

Generally, our data processing is to fulfil our obligation under contract with you and for product safety reasons, to safeguard your rights in connection with warranty and product registration questions. In some cases, but only if appropriate data protection is ensured, personal data might be transferred to recipients located outside of the European Economic Area.

Further information are provided on request. You can contact our Data Protection Officer via **MideaDPO@midea.com**. To exercise your rights such as right to object your personal date being processed for direct marketing purposes, please contact us via **MideaDPO@midea.com**. To find further information, please follow the QR Code.

The design and specifications are subject to change without prior notice for product improvement. Consult with the sales agency or manufacturer for details. Any updates to the manual will be uploaded to the service website, please check for the latest version.

Importer: MIDEA AIR CONDITIONING AUSTRALIA

Manufacturer:
GD Midea Air-Conditioning Equipment Co., Ltd.
Lingang Road Beijiao Shunde Foshan
Guangdong People's Republic of China 528311

Midea

make yourself at home

https://www.midea.com/au
https://www.mdhome.com.au
© Midea 2025 all rights reserved

QS005UI-T1 A7
16122500A34375
20250307