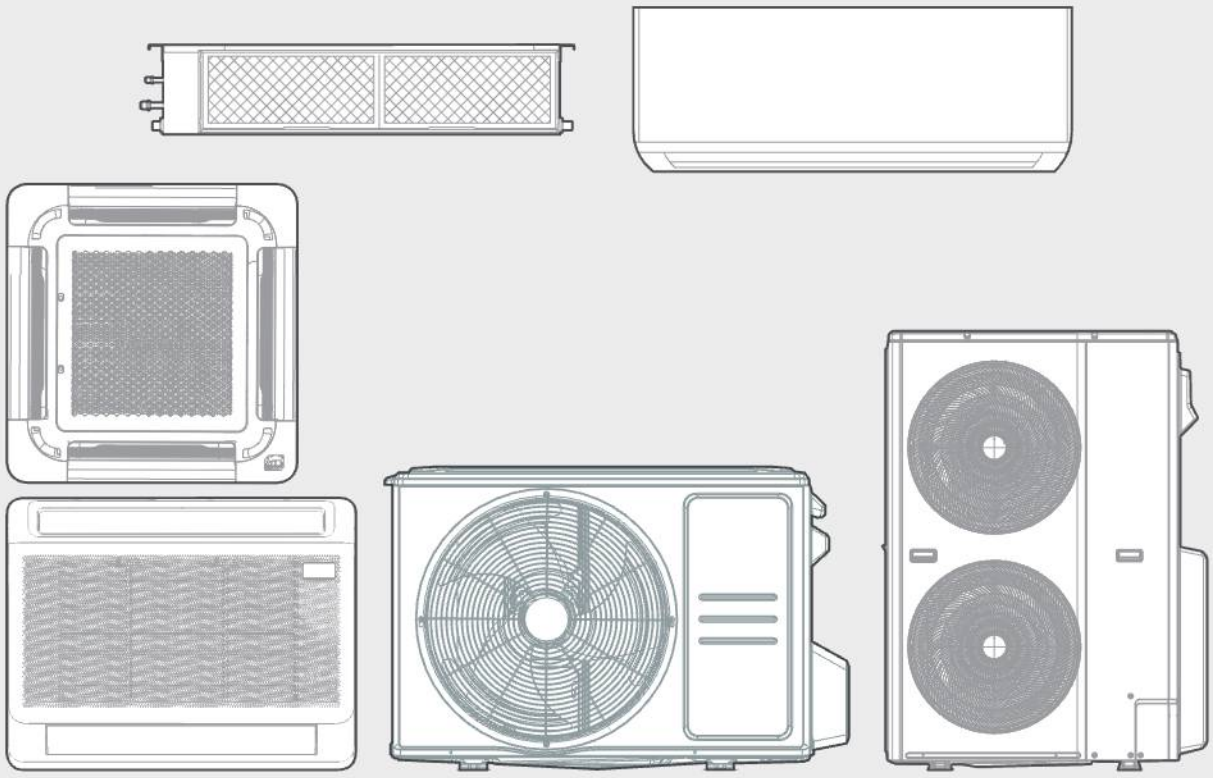

INVERTER ONE-TWO/ONE-THREE/ONE-FOUR/ONE-FIVE/ONE-SIX SPLIT-TYPE AIR CONDITIONER

USER MANUAL

MODEL NUMBER:

MULMI0250B
MULMI0371B
MULMI0490B
MULMI0513B
MULMI0619C

Warning notices: Before using this product, please read this manual carefully and keep it for future reference.
The design and specifications are subject to change without prior notice for product improvement.
Consult with your dealer or manufacturer for details.
The diagram above is just for reference. Please take the appearance of the actual product as the standard.

THANK YOU LETTER

Thank you for choosing Midea! Before using your new Midea product, please read this manual thoroughly to ensure that you know how to operate the features and functions that your new appliance offers in a safe way.

CONTENTS

THANK YOU LETTER 01

SAFETY PRECAUTIONS 02

PRODUCT OVERVIEW 07

OPERATION INSTRUCTIONS 10

MANUAL OPERATIONS AND MAINTENANCE 12

TROUBLESHOOTING 13

PRODUCT INSTALLATION 16

SPECIFICATIONS 19

INSTALL OUTDOOR UNIT 20

REFRIGERANT PIPING CONNECTION 24

WIRING PRECAUTIONS 26

AIR EVACUATION 41

NOTE ON ADDING REFRIGERANT 42

TEST RUN 44

FUNCTION OF AUTOMATIC WIRING/PIPING CORRECTION 45

TRADEMARKS, COPYRIGHTS AND LEGAL STATEMENT 46

DISPOSAL AND RECYCLING 46

DATA PROTECTION NOTICE 47

SAFETY PRECAUTIONS

It's really important you read Safety Precautions Before Operation and Installation Incorrect installation due to ignoring instructions can cause serious damage or injury. The seriousness of potential damage or injuries is classified as either a WARNING or CAUTION.

Explanation of Symbols

	**Warning of electrical voltage** This symbol indicates that there is a danger to life and health of persons due to voltage.
	**Warning** The signal word indicates a hazard with a medium level of risk which, if not avoided, may result in death or serious injury.
	**Caution** The signal word indicates a hazard with a low degree of risk which, if not avoided, may result in minor or moderate injury.
	**Attention** The signal word indicates important information (e.g., damage to property), but not danger.
	**Observe instructions** This symbol indicates that a service technician should only operate and maintain this appliance in accordance with the operating instructions.

Read these operating instructions carefully and attentively before using/commissioning the unit and keep them in the immediate vicinity of the installation site or unit for later use!

⚠ WARNING

This appliance can be used by children aged from 8 years and above and persons with reduced physical, sensory or mental capabilities or lack of experience and knowledge if they have been given supervision or instruction concerning use of the appliance in a safe way and understand the hazards involved. Children shall not play with the appliance. Cleaning and user maintenance shall not be made by children without supervision (European Union countries).

This appliance is not intended for use by persons (including children) with reduced physical, sensory or mental capabilities, or lack of experience and knowledge, unless they have been given supervision or instruction concerning use of the appliance by a person responsible for their safety. Children should be supervised to ensure that they do not play with the appliance.

⚠ WARNING FOR PRODUCT USE

If an abnormal situation arises (like a burning smell), immediately turn off the unit and disconnect the power. Call your dealer for instructions to avoid electric shock, fire or injury.

Do not insert fingers, rods or other objects into the air inlet or outlet. This may cause injury, since the fan may be rotating at high speeds.

Do not use flammable sprays such as hair spray, lacquer or paint near the unit. This may cause fire or combustion.

Do not operate the air conditioner in places near or around combustible gases. Emitted gas may collect around the unit and cause explosion.

Do not operate your air conditioner in a wet room such as a bathroom or laundry room. Too much exposure to water can cause electrical components to short circuit.

Do not expose your body directly to cool air for a prolonged period of time.

Do not allow children to play with the air conditioner. Children must be supervised around the unit at all times.

If the air conditioner is used together with burners or other heating devices, thoroughly ventilate the room to avoid oxygen deficiency.

In certain functional environments, such as kitchens, server rooms, etc., the use of specially designed air-conditioning units is highly recommended.

⚠ ELECTRICAL WARNINGS

Only use the specified supply cord. If the supply cord is damaged, it must be replaced by the manufacturer, its service agent or similarly qualified persons in order to avoid a hazard.

Keep power plug clean, Remove any dust or grime that accumulates on or around the plug. Dirty plugs can cause fire or electric shock.

Do not pull supply cord to unplug unit. Hold the plug firmly and pull it from the outlet. Pulling directly on the cord can damage it, which can lead to fire or electric shock.

Do not modify the length of the power supply cord or use an extension cord to power the unit.

Do not share the electrical outlet with other appliances. Improper or insufficient power supply can cause fire or electrical shock.

For all electrical work, follow all local and national wiring standards, regulations, and the Installation Manual. Connect cables tightly, and clamp them securely to prevent external forces from damaging the terminal. Improper electrical connections can overheat and cause fire, and may also cause shock. All electrical connections must be made according to the Electrical Connection Diagram located on the panels of the indoor and outdoor units.

All wiring must be properly arranged to ensure that the control board cover can close properly. If the control board cover is not closed properly, it can lead to corrosion and cause the connection points on the terminal to heat up, catch fire, or cause electrical shock.

Disconnection must be incorporated in the fixed wiring in accordance with the wiring rules.

If the appliances that are intended to be permanently connected to fixed wiring, an all-pole disconnection device which has at least 3mm clearances in all poles, the installation of a residual current device(RCD)having a rated residual operating current not exceeding 30 mA, and disconnection must be incorporated in the fixed wiring in accordance with the wiring rules.

TAKE NOTE OF FUSE SPECIFICATIONS

The air conditioner's circuit board (PCB) is designed with a fuse to provide overcurrent protection. The specifications of the fuse are printed on the circuit board, such as:
T20A/ 250VAC (for < 24000Btu/h units), T30A/ 250VAC (for > 24000Btu/h units)
NOTE: For the units with R32 refrigerant, only the blast-proof ceramic fuse can be used.

⚠ WARNINGS FOR PRODUCT INSTALLATION

Installation must be performed by an authorized dealer or specialist. Defective installation can cause water leakage, electrical shock, or fire.
Installation must be performed according to the installation instructions.
(In North America, installation must be performed in accordance with the requirement of NEC and CEC by authorized personnel only).
Improper installation can cause water leakage, electrical shock, or fire.
Contact an authorized service technician for repair or maintenance of this unit.
This appliance shall be installed in accordance with national wiring regulations.
Only use the included accessories, parts, and specified parts for installation.
Using non-standard parts can cause water leakage, electrical shock, fire, and can cause the unit to fail.
Install the unit in a firm location that can support the unit's weight. If the chosen location cannot support the unit's weight, or the installation is not done properly, the unit may drop and cause serious injury and damage.
Install drainage piping according to the instructions in this manual. Improper drainage may cause water damage to your home and property.
For units that have an auxiliary electric heater, do not install the unit within 1 meter (3 feet) of any combustible materials.
Do not install the unit in a location that may be exposed to combustible gas leaks. If combustible gas accumulates around the unit, it may cause fire.
Do not turn on the power until all work has been completed.
When moving or relocating the air conditioner, consult experienced service technicians for disconnection and reinstallation of the unit.
How to install the appliance to its support, please read the information for details in "indoor unit installation" and "outdoor unit installation" sections.

⚠ CAUTION

Turn off the air conditioner and disconnect the power if you are not going to use it for a long time.
Turn off and unplug the unit during storms.
Make sure that water condensation can drain unhindered from the unit.
Do not operate the air conditioner with wet hands. This may cause electric shock.
Do not use device for any other purpose than its intended use.
Do not climb onto or place objects on top of the outdoor unit.
Do not allow the air conditioner to operate for long periods of time with doors or windows open, or if the humidity is very high.

CLEANING AND MAINTENANCE WARNINGS

Turn off the device and disconnect the power before cleaning. Failure to do so can cause electrical shock.

Do not clean the air conditioner with excessive amounts of water.

Do not clean the air conditioner with combustible cleaning agents. Combustible cleaning agents can cause fire or deformation.

Note about Fluorinated Gases

This air-conditioning unit contains fluorinated greenhouse gases. For specific information on the type of gas and the amount, please refer to the relevant label on the unit itself or the " Owner's Manual - Product Fiche " in the packaging of the outdoor unit. (European Union products only)
Installation, service, maintenance and repair of this unit must be performed by a certified technician.
Product uninstallation and recycling must be performed by a certified technician.
For equipment that contains fluorinated greenhouse gases in quantities of 5 tonnes of CO_2 equivalent or more, but of less than 50 tonnes of CO_2 equivalent, If the system has a leak-detection system installed, it must be checked for leaks at least every 24 months.
When the unit is checked for leaks, proper record-keeping of all checks is strongly recommended.

⚠ WARNING FOR USING R32 REFRIGERANT

When flammable refrigerant are employed, appliance shall be stored in a well-ventilated area where the room size corresponds to the room area as specific for operation.
Appliance shall be installed, operated and stored in a room with a floor area larger than X m^2 .
Appliance shall not be installed in an unvertilated space, if that space is smaller than X m^2 (Please see the SAFETY MANUAL).
The minimum room area and maximum refrigerant charge amount can be found in the SAFETY MANUAL packed with indoor unit.
When mechanical connectors are reused indoors, sealing parts shall be renewed.
When flared joints are reused indoors, the flare part shall be re-fabricated.

European Disposal Guidelines

This marking shown on the product or its literature, indicates that waste electrical and electrical equipment should not be mixed with general household waste.



Correct Disposal of This Product

(Waste Electrical & Electronic Equipment)

This appliance contains refrigerant and other potentially hazardous materials. When disposing of this appliance, the law requires special collection and treatment.
Do not dispose of this product as household waste or unsorted municipal waste.
When disposing of this appliance, you have the following options:

- Dispose of the appliance at designated municipal electronic waste collection facility.
- When buying a new appliance, the retailer will take back the old appliance free of charge.
- The manufacturer will take back the old appliance free of charge.
- Sell the appliance to certified scrap metal dealers.

Special notice

Disposing of this appliance in the forest or other natural surroundings endangers your health and is bad for the environment. Hazardous substances may leak into the ground water and enter the food chain.

SPECIFICATIONS

Product Model	MULMI0250B	MULMI0371B	MULMI0490B
Power source	220-240V~ 50Hz, 1Ph		
Cooling capacity	5.25kW	7.1kW	9.15kW
Heating capacity	5.50kW	7.5kW	9.60kW
Rated current	12.0A	17.5A	19.0A
Rated power input	3050W	4000W	4150W
Outdoor unit resistance class	IPX4		

Product Model	MULMI0513B	MULMI0619C
Power source	220-240V~ 50Hz, 1Ph	
Cooling capacity	13.5kW	19.0kW
Heating capacity	14.0kW	21.5kW
Rated current	30.0A	30.4A
Rated power input	6900W	6992W
Outdoor unit resistance class	IPX4	

PRODUCT OVERVIEW

(A) Wall-mounted type

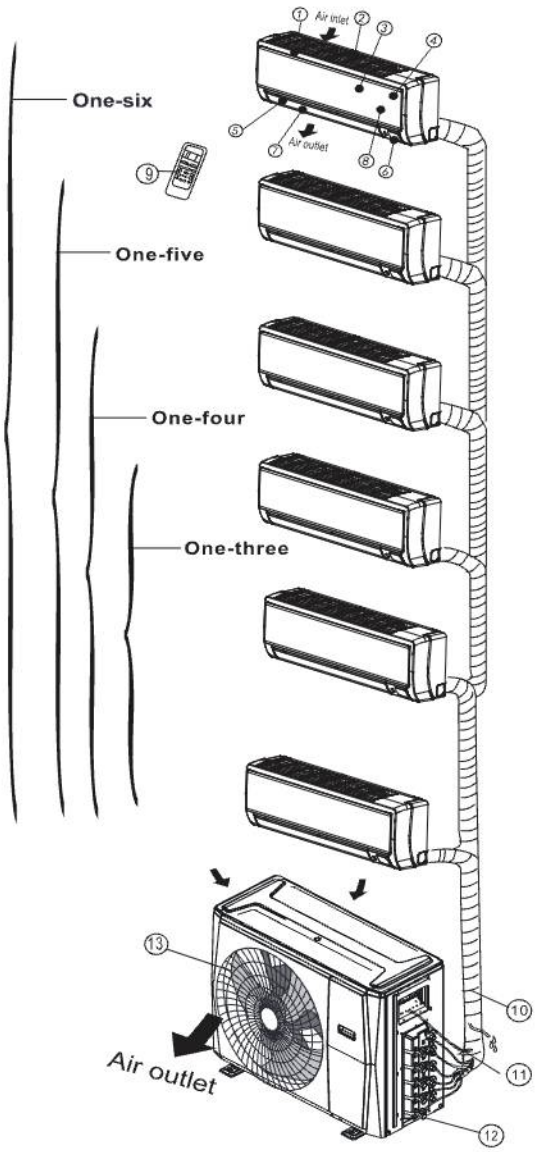

Indoor unit

1. Panel frame
2. Rear air intake grille
3. Front panel
4. Air purifying filter & Air filter (behind)
5. Horizontal louver
6. LCD display window
7. Vertical louver
8. Manual control button (behind)
9. Remote controller holder

Outdoor unit

10. Drain hose, refrigerant connecting pipe
11. Connective cable
12. Stop valve
13. Fan hood

(B) Duct / Ceiling type

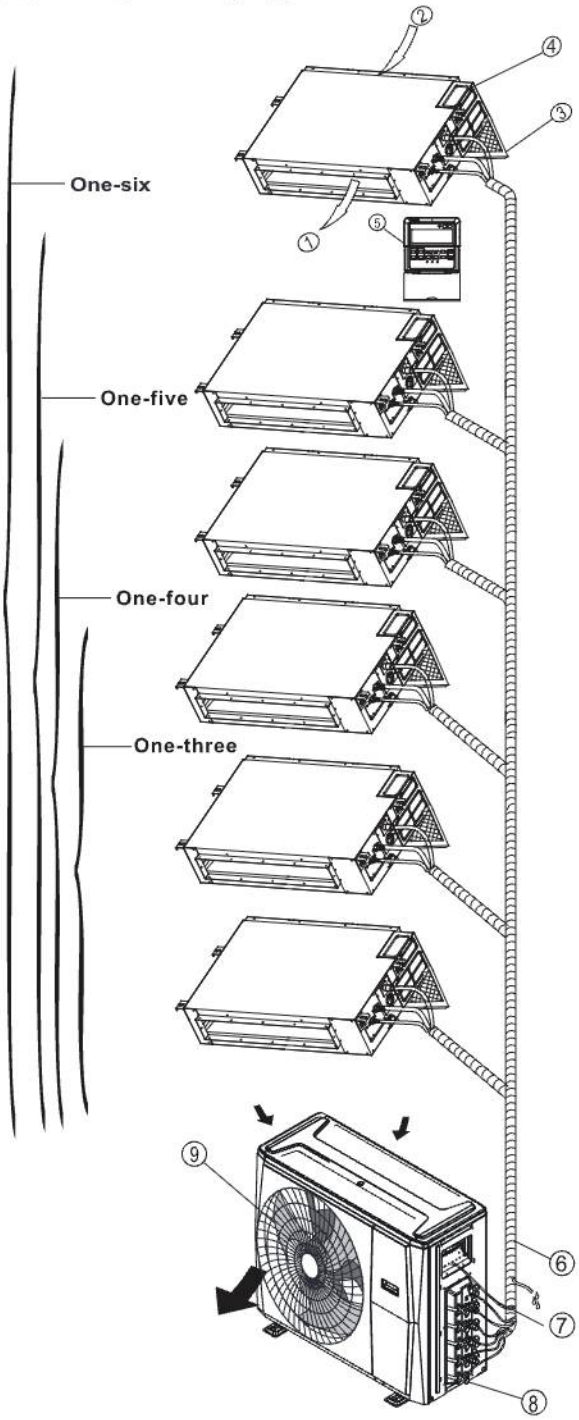

Indoor unit

1. Air outlet
2. Air inlet
3. Air filter
4. Electric control cabinet
5. Wire controller

Outdoor unit

6. Drain hose, refrigerant connecting pipe
7. Connective cable
8. Stop valve
9. Fan hood

(C) Floor and standing type(Console)

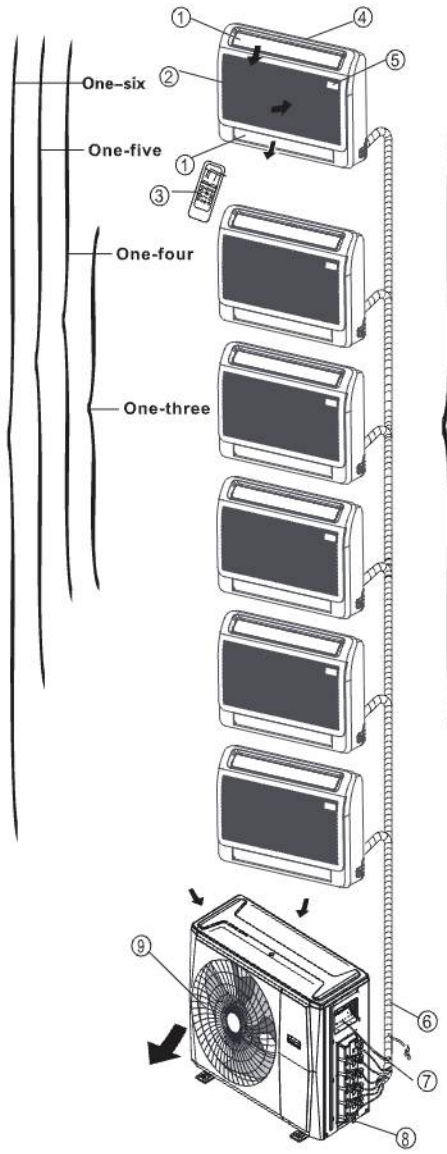

Indoor unit

1. Air flow louver (at air outlet)
2. Air inlet
3. Remote controller
4. Installation part
5. Display panel

Outdoor unit

6. Drain hose, refrigerant connecting piping
7. Connective cable
8. Stop valve
9. Fan hood

(D) Compact four-way cassette type

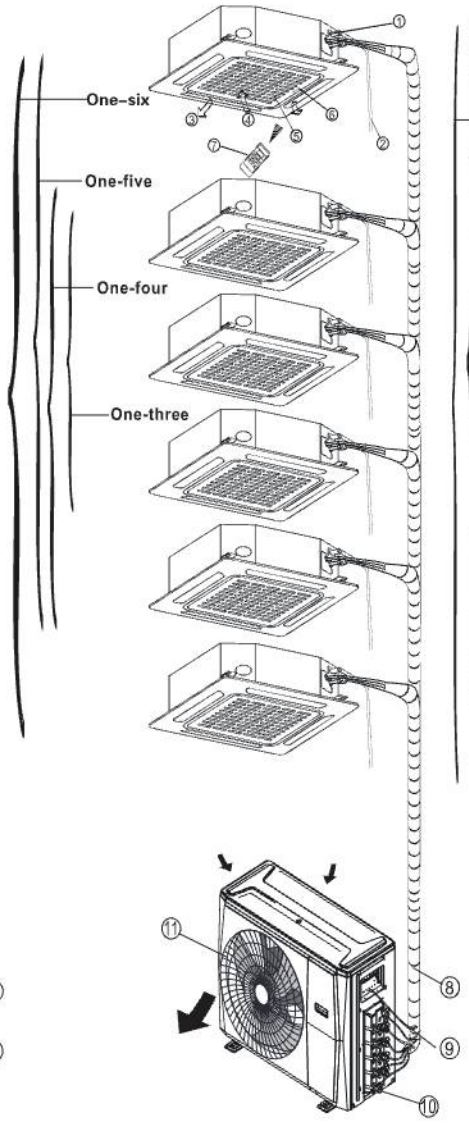

Indoor unit

1. Drain pump (drain water from indoor unit)
2. Drain hose
3. Air outlet
4. Air inlet
5. Air-in grill
6. Display panel
7. Remote controller

Outdoor unit

8. Refrigerant connecting piping
9. Connecting cable
10. Stop valve
11. Fan hood

(E) One-way cassette type

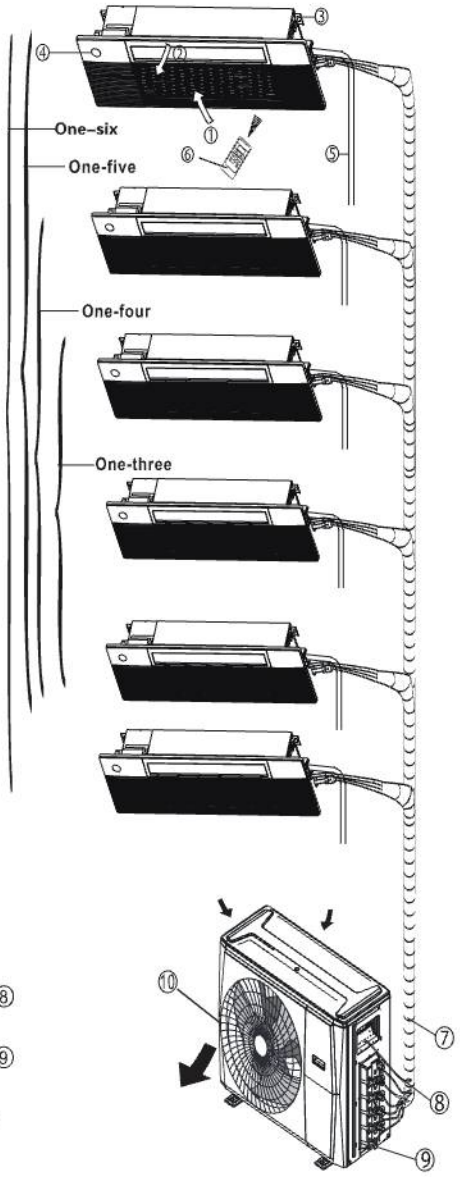

Indoor unit

1. Air inlet (with air filter in it)
2. Air flow louver (at air outlet)
3. Installation part
4. Display panel
5. Drain pipe
6. Remote controller

Outdoor unit

7. Refrigerant connecting piping
8. Connecting cable
9. Stop valve
10. Fan hood

NOTE:

- For multi-split type air conditioners, one outdoor unit can be matched to different types of indoor units. All of the pictures in this manual are for demonstration purposes only. Your air conditioner may be slightly different, if similar in shape.
- Necessity to allow disconnection of the appliance from the supply after installation, unless the appliance incorporates a switch complying. The disconnection may be achieved by having the plug accessible or by incorporating a switch in the fixed wiring in accordance with the wiring rules.

Operating Conditions

When your air conditioner is used outside of the following temperature ranges, certain safety protection features may activate and cause the unit to disable.

Operating Temperature

	COOL Mode	HEAT Mode	DRY Mode
Room Temp.	17°C~32°C(62°F~90°F)	0°C~30°C(32°F~86°F)	10°C~32°C(50°F~90°F)
	16°C~32°C(60°F~90°F) For stepless speed regulation models.		
Outdoor Temp.	0°C~50°C(32°F~122°F)	-15°C~24°C(5°F~75°F)	0°C~50°C(32°F~122°F)
	-15°C~50°C(5°F~122°F) For models with low-temp. cooling systems.		
	0°C~52°C(32°F~126°F) For special tropical models	-30°C - 24°C(-22°F - 75°F) (For North America market 36K hyper heat unit)	0°C~52°C(32°F~126°F) For special tropical models

FOR OUTDOOR UNITS WITH AUXILIARY ELECTRIC HEATER

When outside temperature is below 0°C (32°F), we strongly recommend keeping the unit plugged in at all time to ensure smooth ongoing performance.

NOTE: Room relative humidity less than 80%. If the air conditioner operates in excess of this figure, the surface of the air conditioner may attract condensation. Please sets the vertical air flow louver to its maximum angle (vertically to the floor), and set HIGH fan mode.

To further optimize the performance of your unit, do the following:

- Keep doors and windows closed.
- Limit energy usage by using TIMER ON and TIMER OFF functions.
- Do not block air inlets or outlets.
- Regularly inspect and clean air filters.

OPERATION INSTRUCTIONS

Features

Protection of the air conditioner
Compressor protection
- The compressor cannot restart for 3 minutes after it stops.

Anti-cold air
(Cooling and heating models only)
- The unit is designed not to blow cold air on HEAT mode, when the indoor heat exchanger is in one of the following three situations and the set temperature has not been reached.
  A) When heating has just started.
  B) During defrosting.
  C) Low temperature heating.
- The indoor or outdoor fan stop running when defrosting (Cooling and heating models only).

Defrosting (Cooling and heating models only)
- Frost may be generated on the outdoor unit during a heat cycle when outdoor temperature is low and humidity is high resulting in lower heating efficiency in the air conditioner.
- Under these conditions, the air conditioner will stop heating operations and start defrosting automatically.
- The time to defrost may vary from 4 to 10 minutes, depending the outdoor temperature and the amount of frost buildup on the outdoor unit.

Auto-Restart (some models)

In case of power failure, the system will immediately stop. When power returns, the Operation light on the indoor unit will flash. To restart the unit, press the **ON/OFF** button on the remote control. If the system has an auto restart function, the unit will restart using the same settings.

The air conditioner turns to FAN ONLY mode from COOL or HEAT (for cooling and heating models only) mode.

When an indoor unit reaches the set temperature, it turns to FAN only mode. When all units reach the set temperature, the compressor automatically shuts down. Fan speed of indoor unit depends on the indoor unit's parameter settings, selectable options include: fan off, blowing at the preset speed, gentle breeze, and intermittent airflow.The compressor will start again when the indoor temperature rises on COOL mode or falls on HEAT mode to the set point.

Droplets of water may form on the surface of the indoor unit when cooling occurs in relatively high humidity (defined as higher than 80%). Adjust the horizontal louver to the maximum air outlet position and select HIGH fan speed.

White mist emerging from the indoor unit
- A white mist may be generated due to a large temperature difference between air inlet and air outlet on COOL mode in places with high relative humidity.
- A white mist may be generated due to moisture created in the defrosting process when the air conditioner restarts in HEAT mode operation after defrosting.

Noise coming from the air conditioner
- You may hear a low hissing sound when the compressor is running or has just stopped running. This sound is the sound of the refrigerant flowing or coming to a stop.
- You may also hear a low "squeaking" sound when the compressor is running or has just stopped running. This is caused by tempera heat expansion and cold contraction of the plastic parts in the unit when the temperature is changing.
- A noise may be heard due to the louver restoring itself to its original position when power is first turned on.

Dust blowing out from the indoor unit.

This is happens when the air conditioner has not been used for a long time or during its first use.

Smell emitting from the indoor unit.

This is caused by the indoor unit giving off smells permeated from building materials, furniture,or smoke.

Heating mode (For cooling and heating models only)

The air conditioner draws in heat from the outdoor unit and releases it via the indoor unit during heating. When the outdoor temperature falls, heat drawn in by the air conditioner decreases accordingly. At the same time, heat loading of the air conditioner increases due to larger difference between indoor and outdoor temperature. If a comfortable temperature cannot be achieved with the air conditioner alone, it is recommended that you use a supplementary heating device.

Lightning or a car wireless telephone operating nearby may cause the unit to malfunction. Disconnect the unit from its power source and then re-connect the unit with the power source again. Push the ON/OFF button on the remote controller to restart operations.

Energy Saving Tips

- **DO NOT** set the unit to excessive temperature levels.
- While cooling, close the curtains to avoid direct sunlight.
- Doors and windows should be kept closed to keep cool or warm air in the room.
- **DO NOT** place objects near the air inlet and outlet of the unit. This will reduce the efficiency of the unit.
- Set a timer and use the built-in SLEEP/ECONOMY mode if applicable.
- If you don't plan to use the unit for a long time, remove the batteries from the remote control.
- Clean the air filter every two weeks. A dirty filter can reduce cooling or heating efficiency.
- Adjust louvers properly and avoid direct airflow.

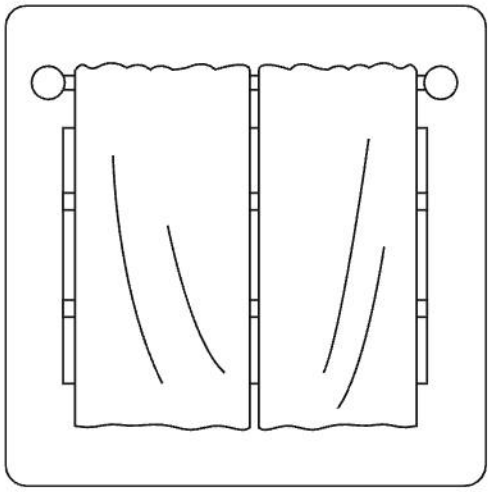

Closing curtains during heating also helps keep the heat in

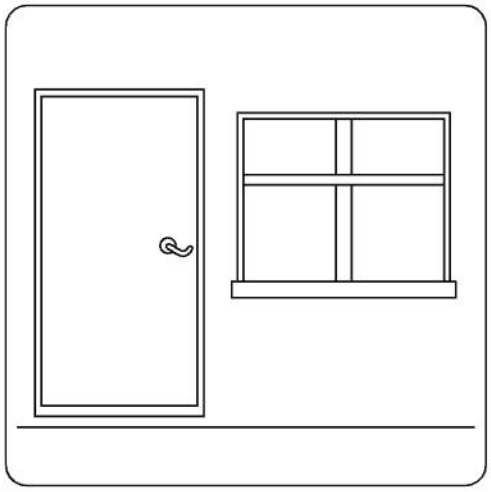

Doors and windows should be kept closed

MANUAL OPERATIONS AND MAINTENANCE

Operation mode selection

While two or more indoor units are simultaneously operating, make sure the modes do not conflict with each other. The heat mode claims precedence over all other modes. If the unit intially started to operate in HEAT mode, the other units can operate in HEAT mode only. For example: If the unit intially started operates under COOL (or FAN) mode, the other units can operate under any mode except HEAT. If one of the unit selects HEAT mode, the other operating units will stop operation and diplay "--" (for units with display window only) or the auto and operation indication light will flash rapidly, the defrost indication light will turn off, and the timer indication light will remain on (for units without a display window). Alternatively, the defrost and alarm indication light (if applicable) wil light up, or the operation indication light will flash rapidly, and the timer indication light will turn off (for the floor and standing type).

Maintenance

If you plan to leave the unit idle for a long time, perform the following tasks:

1. Clean the indoor unit and air filter.
2. Select FAN ONLY mode and let the indoor fan run for a time to dry the inside of the unit.
3. Disconnect the power supply and remove the battery from the remote control.
4. Check components of the outdoor unit periodically. Contact a local dealer or a customer service centre if the unit requires servicing.

NOTE: Always TURN OFF your AC system and disconnect its power supply before cleaning or maintenance.

Optimal operation

To achieve optimal performance, please note the following:

- Adjust the direction of the air flow so that it is notblowing directly on people.
- Adjust the temperature to achieve the highest possible level of comfort. Do not adjust the unit to excessive temperature levels.
- Close doors and windows in COOL mode or HEAT mode.
- Use the TIMER ON button on the remote controller to select a time you want to start your air conditioner.
- Do not place any object near the air inlet or air outlet, as the efficiency of the air conditioner may be reduced and the air conditioner may stop running.
- Clean the air filter periodically, otherwise cooling or heating per formance may be reduced.
- Do not operate unit with horizontal louvre in closed position.

Suggestion:
For units that feature an electric heater, when the outside ambient temperature is below 0°C (32°F), it is strongly recommended that you to keep the machine plugged in so as to guarantee smooth operation.

When the air conditioner is to be used again:

- Use a dry cloth to wipe off the dust accumulated on the rear air intake grille in order to avoid the dust being dispersed from the indoor unit.
- Check that the wiring is not broken off or disconnected.
- Check that the air filter is installed.
- Check if the air outlet or inlet is blocked after the air conditioner has not been used for a long time.

TROUBLESHOOTING

⚠ CAUTION

If any of the following conditions occurs, turn off your unit immediately!
- The supply cord is damaged or abnormally warm
- You smell a burning odor
- The unit emits loud or abnormal sounds
- A power fuse blows or the circuit breaker frequently trips
- Water or other objects fall into or out of the unit

DO NOT ATTEMPT TO FIX THESE YOURSELF! CONTACT AN AUTHORIZED SERVICE PROVIDER IMMEDIATELY

Common Issues

The following problems are not a malfunction and in most situations will not require repairs.

Issue	Possible Causes
Unit does not turn on when pressing ON/OFF button	The Unit has a 3-minute protection feature that prevents the unit from overloading. The unit cannot be restarted within three minutes of being turned off.
	Cooling and Heating Models: If the Operation light and PRE-DEF (Pre-heating / Defrost) indicators are lit up, the outdoor temperature is too cold and the unit's anti-cold wind is activated in order to defrost the unit.
	In Cooling-only Models: If the Fan Only" indicator is lit up, the outdoor temperature is too cold and the unit's anti-freeze protection is activated in order to defrost the unit.
The unit changes from COOL/HEAT mode to FAN mode	The unit may change its setting to prevent frost from forming on the unit. Once the temperature increases, the unit will start operating in the previously selected mode again.
	The set temperature has been reached, at which point the unit turns off the compressor. The unit will continue operating when the temperature fluctuates again.
The indoor unit emits white mist	In humid regions, a large temperature difference between the room's air and the conditioned air can cause white mist.
Both the indoor and outdoor units emit white mist	When the unit restarts in HEAT mode after defrosting, white mist may be emitted due to moisture generated from the defrosting process.
The indoor unit makes noises	A squeaking sound is heard when the system is OFF or in COOL mode. The noise is also heard when the drain pump (optional) is in operation.
	A squeaking sound may occur after running the unit in HEAT mode due to expansion and contraction of the unit's plastic parts.
Both the indoor unit and outdoor unit make noises	A low hissing sound may occur during operation. This is normal and is caused by refrigerant gas flowing through both indoor and outdoor units.
	A low hissing sound may be heard when the system starts, has just stopped running or is defrosting. This noise is normal and is caused by the refrigerant gas stopping or changing direction.

Issue	Possible Causes
The outdoor unit makes noises	The unit will make different sounds based on its current operating mode.
Dust is emitted from either the indoor or outdoor unit	The unit may accumulate dust during extended periods of non-use, which will be emitted when the unit is turned on. This can be mitigated by covering the unit during long periods of inactivity.
The unit emits a bad odor	The unit may absorb odors from the environment (such as furniture, cooking, cigarettes, etc.) which will be emitted during operations.
	The unit's filters have become moldy and should be cleaned.
The fan of the outdoor unit does not operate	During operation, the fan speed is controlled to optimize product operation.

NOTE: If problem persists, contact a local dealer or your nearest customer service center. Provide them with a detailed description of the unit malfunction as well as your model number.

When troubles occur, please check the following points before contacting a repair company.

Problem	Possible Causes	Solution
Poor Cooling Performance	Temperature setting may be higher than ambient room temperature	Lower the temperature setting
	The heat exchanger on the indoor or outdoor unit is dirty	Clean the affected heat exchanger
	The air filter is dirty	Remove the filter and clean it according to instructions
	The air inlet or outlet of either unit is blocked	Turn the unit off, remove the obstruction and turn it back on
	Doors and windows are open	Make sure that all doors and windows are closed while operating the unit
	Excessive heat is generated by sunlight.	Close windows and curtains during periods of high heat or bright sunshine.
	Low refrigerant due to leak or long-term use	Check for leaks, re-seal if necessary and top off refrigerant

Problem	Possible Causes	Solution
The unit is not working	Power failure	Wait for the power to be restored
	The power is turned off	Turn on the power
	The fuse is burned out	Replace the fuse
	Remote control batteries are dead	Replace batteries
	The Unit's 3-minute protection has been activated	Wait three minutes after restarting the unit
The unit starts and stops frequently	System circuit is blocked	Determine which circuit is blocked and replace the malfunctioning piece of equipment
	There's too much or too little refrigerant in the system	Check for leaks and recharge the system with refrigerant.
	Incompressible gas or moisture has entered the system.	Evacuate and recharge the system with refrigerant
	There is air, incompressible gas or foreign material in the refrigeration system.	Evacuate and recharge the system with refrigerant.
	The compressor is broken	Replace the compressor
	The voltage is too high or too low	Install a manostat to regulate the voltage
Poor heating performance	The outdoor temperature is lower than 7°C (44.5°F)	Check for leaks and recharge the system with refrigerant
	Cold air is entering through doors and windows	Make sure that all doors and windows are closed during use
	Low refrigerant due to leak or long-term use	Check for leaks, re-seal if necessary and top off refrigerant

PRODUCT INSTALLATION

ACCESSORIES

The air conditioning system comes with the following accessories. Use all of the installation parts and accessories to install the air conditioner. Improper installation may result in water leakage, electrical shock and fire, or cause the equipment to fail. The items are not included with the air conditioner must be purchased separately.

Name of Accessories	Q'ty (pc)	Shape	Name of Accessories	Q'ty (pc)	Shape
Manual	2~4		**Drain joint (some models)**	1	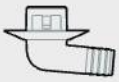
Installation plate (some models)	1		**Seal ring (some models)**	1	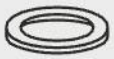
Plastic expansion sheath (some models)	5~8 (depending on models)		**Magnetic ring (Hitch it on the connective cable between indoor unit and outdoor unit after installation.) (some models)**	Varies by model	
Self-Tapping Screw A (some models)	5~8 (depending on models)				
Transfer connector (packed with the indoor or outdoor unit, depending on models) NOTE: Pipe size may differ from appliance to appliance. To meet different pipe size requirements, sometimes the pipe connections need a transfer connector installed on the outdoor unit .	Optional part (one piece per one indoor unit)	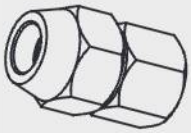	**Cord protection rubber ring (If the cord clamp cannot fasten on a small cord, use the cord protection rubber ring [supplied with accessories] to wrap around the cord. Then fix it in place with the cord clamp.) (some models)**	1	
	Optional part (0-12 pieces for outdoor unit, depending on models)				

Optional accessories

There are two types of remote controls: wired and wireless.
Select a remote controller based on customer preferences and requirements and install in an appropriate place.
Refer to catalogues and technical literature for guidance on selecting a suitable remote controller.

Name	Shape		Quantity (PC)
Connecting pipe assembly	Liquid side	Ø 6.35mm(1/4in)	Parts you must purchase separately. Consult the dealer about the proper pipe size of the unit you purchased.
		Ø 9.52mm(3/8in)	
	Gas side	Ø 9.52mm(3/8in)	
		Ø 12.7mm(1/2in)	
		Ø16mm(5/8in)	

INSTALLATION SUMMARY

1

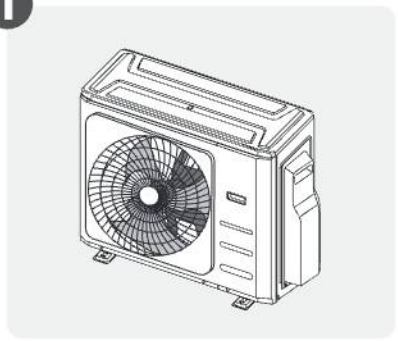

Install the outdoor unit

2

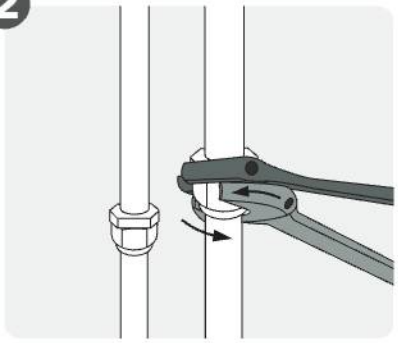

Connect the refrigerant pipes

3

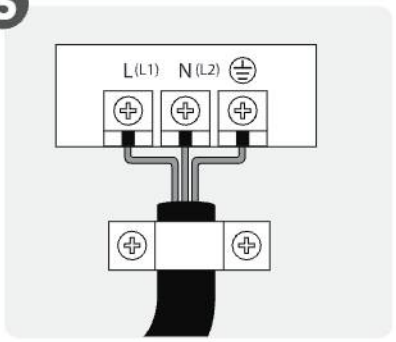

Connect the wires

4

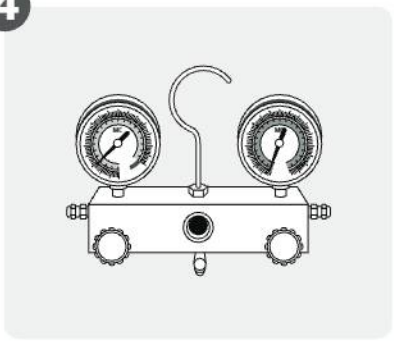

Evacuate the refrigeration system

5



Perform a test run

Installation Diagram

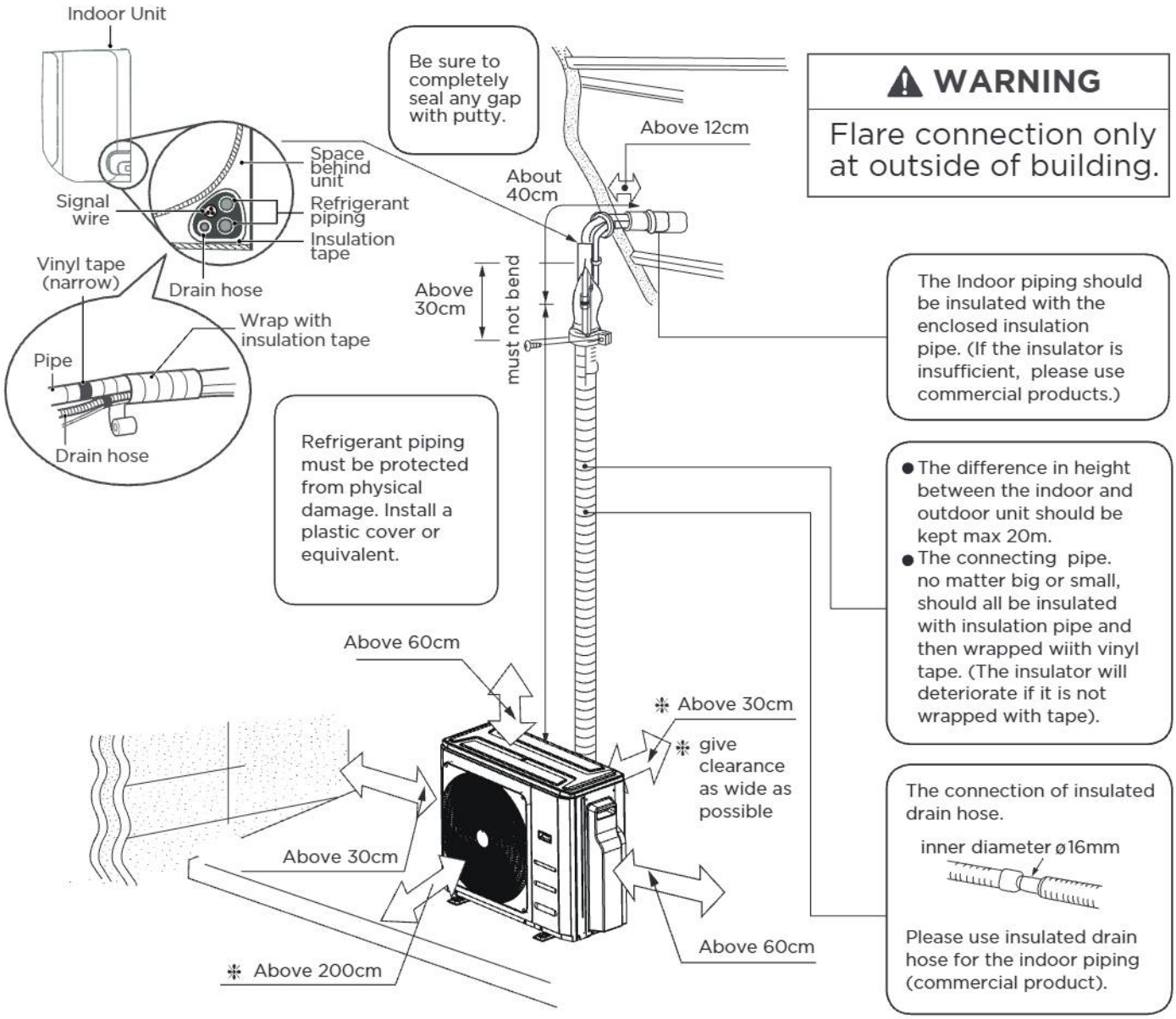

⚠ WARNING

Flare connection only at outside of building.

The Indoor piping should be insulated with the enclosed insulation pipe. (If the insulator is insufficient, please use commercial products.)

- The difference in height between the indoor and outdoor unit should be kept max 20m.
- The connecting pipe. no matter big or small, should all be insulated with insulation pipe and then wrapped wiith vinyl tape. (The insulator will deteriorate if it is not wrapped with tape).

The connection of insulated drain hose.

inner diameter ø16mm

Please use insulated drain hose for the indoor piping (commercial product).

NOTE: The installation must be performed in accordance with the requirement of local and national standards. The installation may be slightly different in different areas.

⚠ CAUTION

- To prevent wall damage, use a stud finder to locate studs.
- A minimum pipe run of 3 meters is required to minimize vibration & excessive noise.
- This illustration is for demonstration purposes only.
- The actual shape of your air conditioner may be slightly different.
- Copper lines must be independently insulated.

SPECIFICATIONS

Number of units that can be used together	Connected units	1-6 units
Compressor stop/start frequency	Stop time	3 min or more
Power source voltage	voltage fluctuation	within ±10% of rated voltage
	voltage drops during start	within ±15% of rated voltage
	interval unbalance	within ±3% of rated voltage

Models without quick connectors **Unit: m/ft.**

	1 drive 2	1 drive 3	1 drive 4	1 drive 5	1 drive 6
Max. length for all rooms	40/131	60/197	80/262	80/262	80/262
Max. length for one indoor unit	25/82	30/98	35/115	35/115	35/115
Max. height different between indoor and outdoor unit	15/49	15/49	15/49	15/49	15/49
Max. height different between indoor units	10/33	10/33	10/33	10/33	10/33

NOTE The maximum pipe length for the Australian 19.5kW R410A one-to-six unit can be extended to 100m.

Models with quick connectors **Unit: m/ft.**

	1 drive 2	1 drive 3	1 drive 4	1 drive 5	1 drive 6
Max. length for all rooms	37.5/123	52.5/172	67.5/221	67.5/221	——
Max. length for one indoor unit	22.5/73	22.5/73	22.5/73	22.5/73	——
Max. height different between indoor and outdoor unit	10/33	10/33	10/33	10/33	——
Max. height different between indoor units	7.5/24	7.5/24	7.5/24	7.5/24	——

When installing multiple indoor units with a single outdoor unit, ensure that the length of the refrigerant pipe and the drop height between the indoor and outdoor units meet the requirements illustrated in the following diagram:

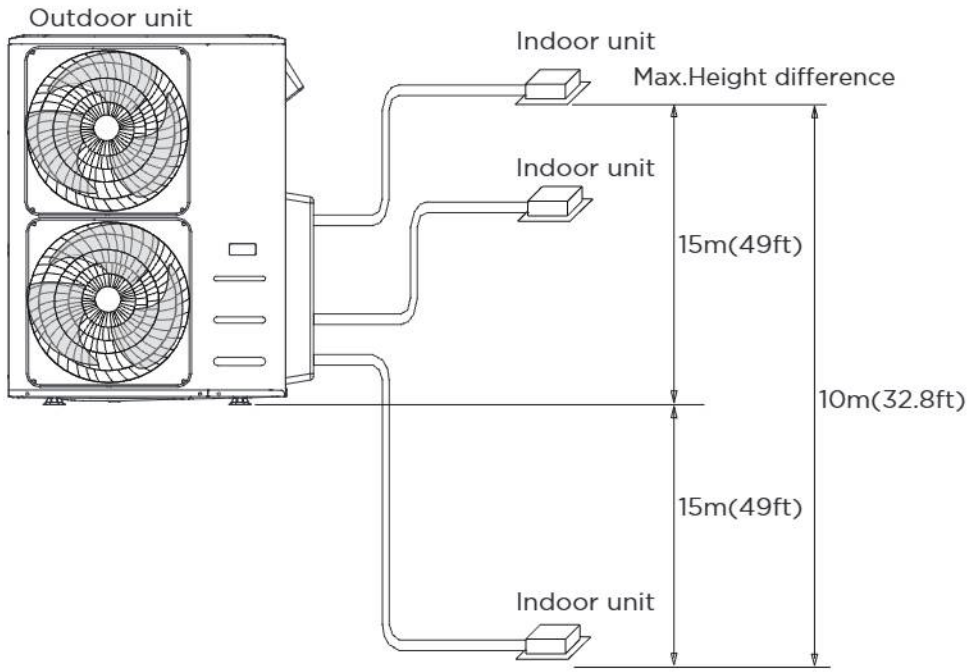

INSTALL OUTDOOR UNIT

1 Select installation location

NOTE : PRIOR TO INSTALLATION

Before installing the outdoor unit, you must choose an appropriate location. The following are standards that will help you choose an appropriate location for the unit.

Proper installation locations meet the following standards:

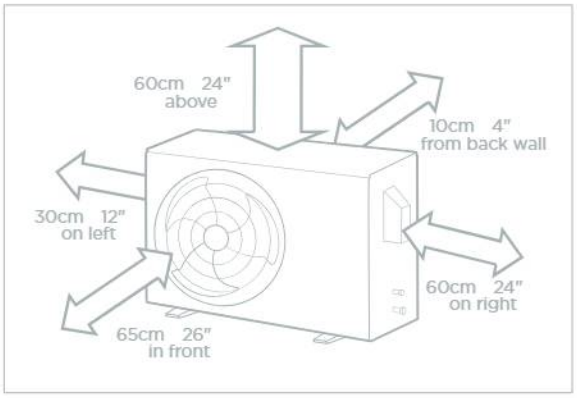

☑ Meets all spatial requirements shown in Installation Clearance Requirements above.



☑ Good air circulation and ventilation.

☑ Firm and solid—the location can support the unit and will not vibrate.

☑ Noise from the unit will not disturb other people.



☑ Protected from prolonged periods of direct sunlight or rain.



☑ Where snowfall is anticipated, take appropriate measures to prevent ice buildup and coil damage.

NOTE Install the unit by following local codes and regulations, there may be differ slightly between different regions.

⚠ CAUTION:

SPECIAL CONSIDERATIONS FOR EXTREME WEATHER

If the unit is exposed to heavy wind:

Install unit so that air outlet fan is at a 90° angle to the direction of the wind. If needed, build a barrier in front of the unit to protect it from extremely heavy winds. See Figures below.

If the unit is frequently exposed to heavy rain or snow:

Build a shelter above the unit to protect it from the rain or snow. Be careful not to obstruct air flow around the unit.

If the unit is frequently exposed to salty air (seaside):

Use outdoor unit that is specially designed to resist corrosion.

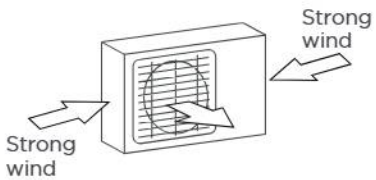

90° angle to the direction of the wind

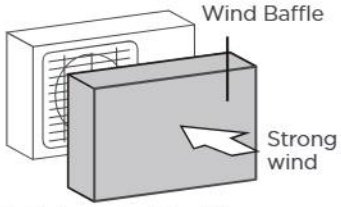

Build a wind Baffle to protect the unit

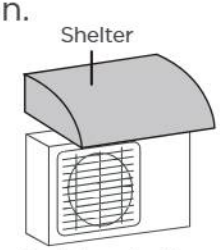

Build a shelter to protect the unit

DO NOT install unit in the following locations:

- ⊘ Near an obstacle that will block air inlets and outlets
- ⊘ Near a public street, crowded areas, or where noise from the unit will disturb others.
- ⊘ Near animals or plants that will be harmed by hot air discharge.
- ⊘ Near any source of combustible gas.
- ⊘ In a location that is exposed to large amounts of dust
- ⊘ In a location exposed to an excessive amounts of salty air.

2 Install drain joint (Heat pump unit only)

Before bolting the outdoor unit in place, you must install the drain joint at the bottom of the unit.

Note that there are two different types of drain joints depending on the type of outdoor unit.

If the drain joint comes with a rubber seal (see **Fig.A**), do the following:

1. Fit the rubber seal on the end of the drain joint that will connect to the outdoor unit.
2. Insert the drain joint into the hole in the base pan of the unit.
3. Rotate the drain joint 90° until it clicks in place facing the front of the unit.
4. Connect a drain hose extension (not included) to the drain joint to redirect water from the unit during heating mode.

If the drain joint doesn't come with a rubber seal (see **Fig. B**), do the following:

1. Insert the drain joint into the hole on the base pan, press firmly to ensure it is properly installed and will not become loose.
2. Connect a drain hose extension (not included) to the drain joint to redirect water from the unit during heating mode.

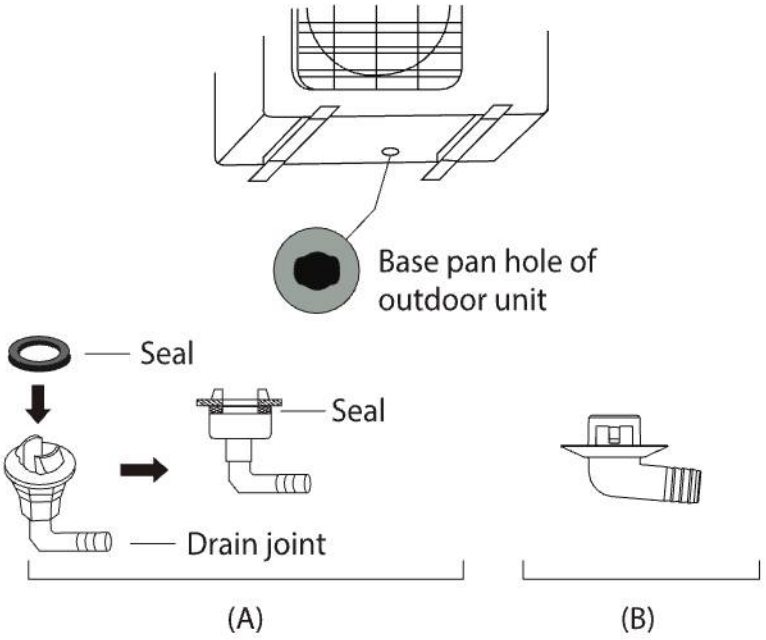

IN COLD CLIMATES

In cold climates, make sure that the drain hose is as vertical as possible to ensure swift water drainage. If water drains too slowly, it can freeze in the hose and flood the unit.

3 Anchor Outdoor Unit

⚠ WARNING

WHEN DRILLING INTO CONCRETE, EYE PROTECTION IS RECOMMENDED AT ALL TIME.

The outdoor unit can be anchored to the ground or to a wall-mounted bracket with bolt (M10). Prepare the installation base of the unit according to the dimensions below.

The following is a list of different outdoor unit sizes and the distance between their mounting feet. Prepare the installation base of the unit according to the dimensions below.

Outdoor Unit Types and Specifications (Split Type Outdoor Unit)

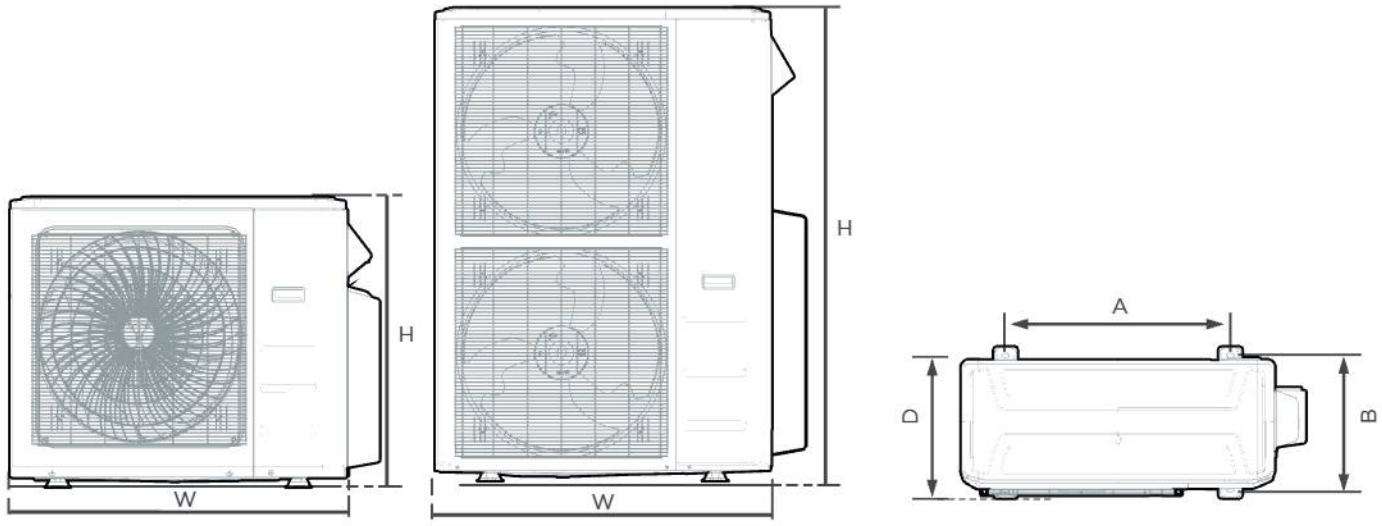

Front view

Top view

(unit: mm/inch)

Outdoor Unit Dimensions W x H x D	Mounting Dimensions	
	Distance A	Distance B
760 x 590 x 285 (29.9 x 23.2 x 11.2)	530 (20.85)	290 (11.4)
765 x 555 x 303 (30.1 x 21.8 x 11.9)	452 (17.8)	286 (11.3)
800 x 554 x 333 (31.5 x 21.8 x 13.1)	514 (20.24)	340 (13.39)
805 x 554 x 330 (31.7 x 21.8 x 12.9)	511 (20.1)	317 (12.5)
810 x 558 x 310 (31.9 x 22 x 12.2)	549 (21.6)	325 (12.8)
845 x 700 x 320 (33.27 x 27.5 x 12.6)	560 (22)	335 (13.2)
845 x 702 x 363 (33.27 x 27.6 x 14.3)	540 (21.26)	350 (13.8)
890 x 673 x 342 (35.0 x 26.5 x 13.5)	663 (26.1)	354 (13.9)
900 x 860 x 315 (35.4 x 33.85 x 12.4)	590 (23.2)	333 (13.1)
900 x 1170 x 350 (35.4 x 46 x 13.8)	590 (23.2)	378 (14.88)
938 x 1369 x 392 (36.93 x 53.9 x 15.43)	634 (24.96)	404 (15.9)
945 x 810 x 395 (37.2 x 31.9 x 15.55)	640 (25.2)	405 (15.95)
946 x 810 x 410 (37.2 x 31.9 x 16.14)	673 (26.5)	403 (15.87)
946 x 810 x 420 (37.2 x 31.9 x 16.53)	673 (26.5)	403 (15.87)
952 x 810 x 404 (37.5 x 31.9 x 15.9)	673 (26.5)	403 (15.87)
952 x 1333 x 410 (37.5 x 52.5 x 16.14)	634 (24.96)	404 (15.9)
952 x 1333 x 415 (37.5 x 52.5 x 16.34)	634 (24.96)	404 (15.9)
980 x 975 x 410 (38.58 x 38.39 x 16.14)	616 (24.25)	397 (15.63)
980 x 975 x 415 (38.58 x 38.39 x 16.34)	616 (24.25)	397 (15.63)
990 x 965 x 345 (38.98 x 38 x 13.58)	624 (24.58)	366 (14.4)
1054 x 1580 x 510 (41.49 x 62.2 x 20.07)	680 (26.77)	499 (19.64)

Rows of series installation

The relations between H, A and L are as follows.

	L	A
L ≤ H	L ≤ 1/2H	25 cm / 9.8” or more
	1/2H < L ≤ H	30 cm / 11.8” or more
L > H	Can not be installed	

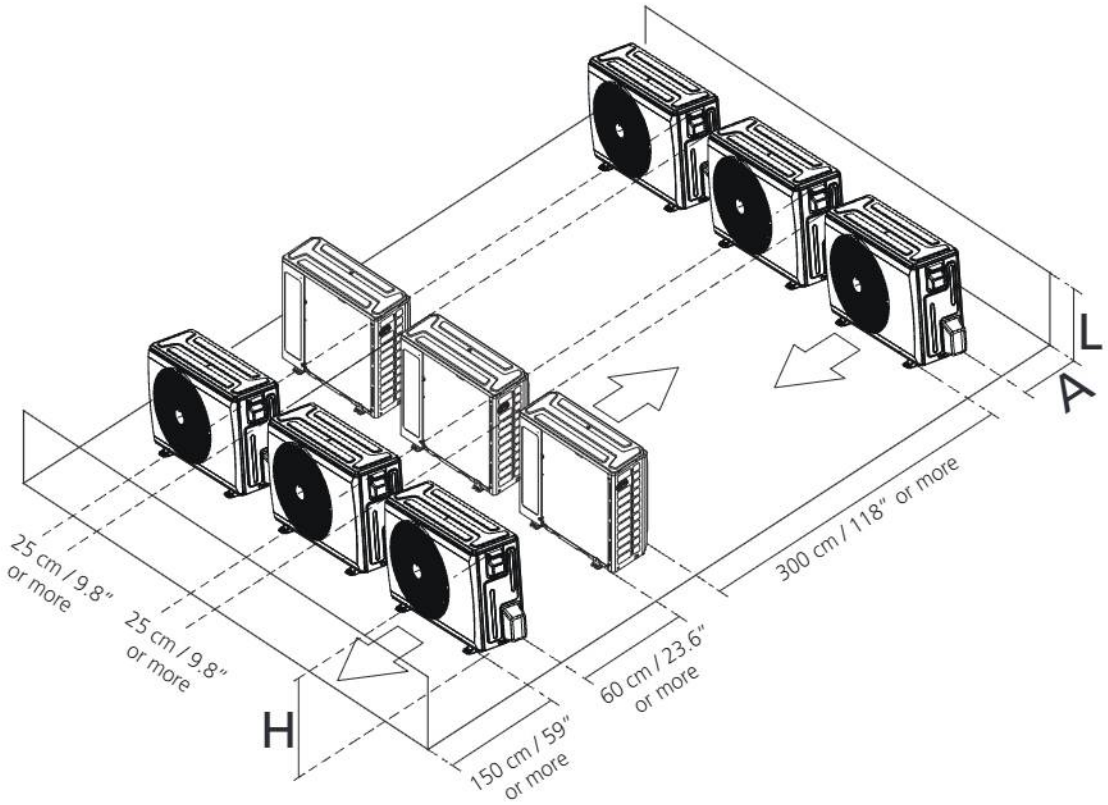

Notes On Drilling Hole In Wall

You must drill a hole in the wall for the refrigerant piping, and the signal cable that will connect the indoor and outdoor units.

1. Determine the location of the wall hole based on the location of the outdoor unit.
2. Using a 65-mm (2.5") core drill, drill a hole in the wall.

NOTE: When drilling the wall hole, make sure to avoid wires, plumbing, and other sensitive components.

3. Place the protective wall cuff in the hole. This protects the edges of the hole and helps seal it when you finish the installation process.

When Select a 24K or higher Indoor Unit

The 24K or higher indoor unit can only be connected with an A system. If there are two 24K or higher indoor units, they can be connected with A and B systems.

Connective pipe size of an A and B system

(unit: inch)

Indoor Unit capacity(Btu/h)	Liquid	Gas
6K7K/9K/12K	1/4	3/8
12K/18K	1/4	1/2
24K/36K	3/8	5/8

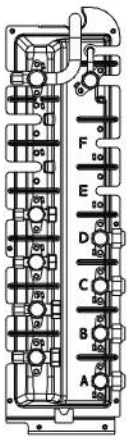

REFRIGERANT PIPING CONNECTION

NOTE :

NOTE: For quick-connect models, please refer to the internal machine manual for the installation method of the connecting pipe. The external machine manual does not repeat the instructions.

When connecting refrigerant piping, **DO NOT** let substances or gases other than the specified refrigerant enter the unit. The presence of other gases or substances will lower the unit's capacity, and can cause abnormally high pressure in the refrigeration cycle. This can cause explosion and injury.

Connection Instructions—Refrigerant Piping

⚠ CAUTION

- The branching pipe must be installed horizontally. An angle of more than 10° may cause malfunction.
- **DO NOT** install the connecting pipe until both indoor and outdoor units have been installed. Insulate both the gas and liquid piping to prevent condensation.

Step 1: Cut pipes

When preparing refrigerant pipes, take extra care to cut and flare them properly. This will ensure efficient operation and minimize the need for future maintenance.

- Measure the distance between the indoor and outdoor units.
- Using a pipe cutter, cut the pipe a little longer than the measured distance.
- Make sure that the pipe is cut at a perfect 90° angle.

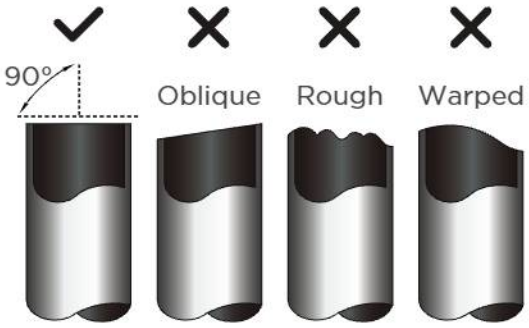

DO NOT DEFORM PIPE WHILE CUTTING

Be extra careful not to damage, dent, or deform the pipe while cutting. This will drastically reduce the heating efficiency of the unit.

Step 2: Remove burrs

Burrs can affect the air-tight seal of refrigerant piping connection. They must be completely removed.

- Hold the pipe at a downward angle to prevent burrs from falling into the pipe.
- Using a reamer or deburring tool, remove all burrs from the cut section of the pipe.

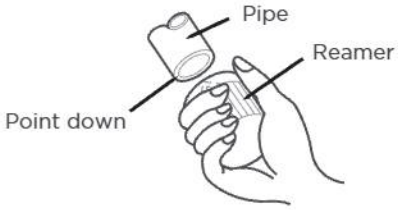

Step 3: Flare pipe ends

Proper flaring is essential to achieve an airtight seal.

- After removing burrs from cut pipe, seal the ends with PVC tape to prevent foreign materials from entering the pipe.
- Sheath the pipe with insulating material.
- Place flare nuts on both ends of pipe. Make sure they are facing in the right direction, because you can't put them on or change their direction after flaring.

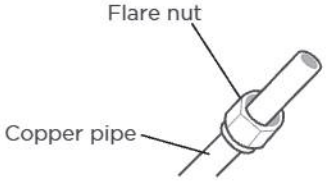

- Remove PVC tape from ends of pipe when ready to perform flaring work.
- Clamp flare from on the end of the pipe. The end of the pipe must extend beyond the flare form.

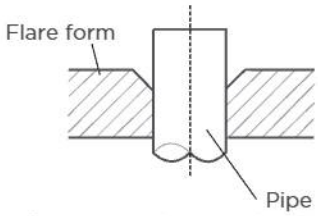

- Place flaring tool onto the form.
- Turn the handle of the flaring tool clockwise until the pipe is fully flared. Flare the pipe in a accordance with the dimensions.

PIPING EXTENSION BEYOND FLARE FORM

Pipe gauge	Tightening torque	Flare dimension(A) (Unit:mm/Inch)		Flare shape
		Min.	Max.	
Ø 6.35 (Ø 1/4")	18-20 N·m (180-200kgf.cm)	8.4/0.33	8.7/0.34	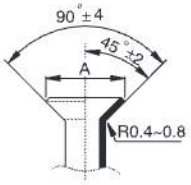
Ø 9.52 (Ø3/8")	32-39 N·m (320-390kgf.cm)	13.2/0.52	13.5/0.53	
Ø 12.7 (Ø 1/2")	49-59 N·m (490-590kgf.cm)	16.2/0.64	16.5/0.65	
Ø 16 (Ø 5/8")	57-71 N·m (570-710kgf.cm)	19.2/0.76	19.7/0.78	
Ø 19 (Ø 3/4")	67-101 N·m (670-1010kgf.cm)	23.2/0.91	23.7/0.93	
Ø 22 (Ø 7/8")	85-110 N·m (850-1100kgf.cm)	26.4/1.04	26.9/1.06	

- Remove the flaring tool and flare form, then inspect the end of the pipe for cracks and even flaring.

Step 4: Connect pipes

Connect the copper pipes to the indoor unit first, then connect it to the outdoor unit. You should first connect the low-pressure pipe, then the highpressure pipe.

- When connecting the flare nuts, apply a thin coat of refrigeration oil to the flared ends of the pipes.
- Align the center of the two pipes that you will connect.

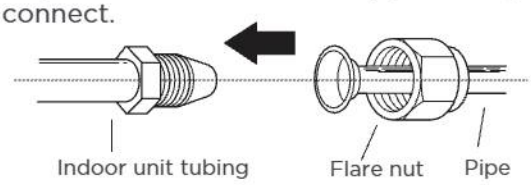

- Tighten the flare nut snugly by hand.
- Using a wrench, grip the nut on the unit tubing.
- While firmly gripping the nut, use a torque wrench to tighten the flare nut according to the torque values in above table.

NOTICE

Use both a spanner and a torque wrench when connecting or disconnecting pipes to/from the unit.

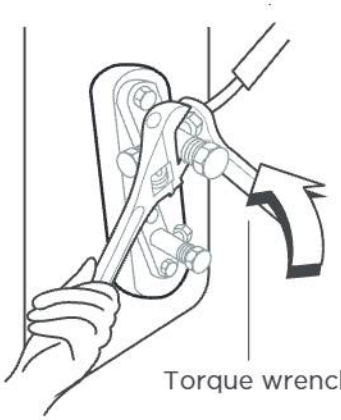

⚠ CAUTION

Ensure to wrap insulation around the piping. Direct contact with the bare piping may result in burns or frostbite.

- Make sure the pipe is properly connected. Over tightening may damage the bell mouth and under tightening may lead to leakage.

NOTICE

MINIMUM BEND RADIUS

Carefully bend the tubing in the middle according to the diagram below.

DO NOT bend the tubing more than 90° or more than 3 times.

Use appropriate tool

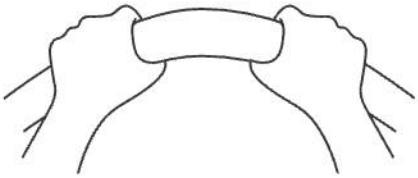

min-radius 10cm(3.9")

- After connecting the copper pipes to the indoor unit, wrap the power cable, signal cable and the piping together with binding tape.

NOTICE

DO NOT intertwine signal cable with other wires. While bundling these items together.

DO NOT intertwine or cross the signal cable with any other wiring.

- Thread this pipeline through the wall and connect it to the outdoor unit.
- Insulate all the piping, including the valves of the outdoor unit.
- Open the stop valves of the outdoor unit to start the flow of the refrigerant between the indoor and outdoor unit.

⚠ CAUTION

Check to make sure there is no refrigerant leak after completing the installation work. If there is a refrigerant leak, ventilate the area immediately and evacuate the system (refer to the Air Evacuation section of this manual).

WIRING PRECAUTIONS

⚠ WARNING

BEFORE PERFORMING ANY ELECTRICAL WORK, READ THESE WARNINGS.

All wiring must comply with local and national electrical codes, regulations and must be installed by a licensed electrician.
All electrical connections must be made according to the Electrical Connection Diagramlocated on the panels of the indoor and outdoor units.
If there is a serious safety issue with the power supply, stop work immediately. Explain your reasoning to the client, and refuse to install the unit until the safety issue is properly resolved.
Power voltage should be within 90-110% of rated voltage. Insufficient power supply can cause malfunction, electrical shock, or fire.
Installation of an external surge suppressor at the outdoor disconnect is recommended.
If connecting power to fixed wiring, a switch or circult breaker that disconnects all poles and has a contact separation of at least 1/8in (3mm) must be incorporated in the fixed wiring. The qualified technician must use an approved circuit breaker or switch.
Only connect the unit to an individual branch circuit. Do not connect another appliance to that outlet.
Make sure to properly ground the air conditioner. Every wire must be firmly connected. Loose wiring can cause the terminal to overheat, resulting in product malfunction and possible fire.
Do not let wires touch or rest against refrigerant tubing, the compressor, or any moving parts within the unit.
If the unit has an auxiliary electric heater, it must be installed at least 1 meter (40in) away from any combustible materials.
To avoid getting an electric shock, never touch the electrical components soon after the power supply has been turned off. After turning off the power, always wait 10 minutes or more before you touch the electrical components.
Make sure that you do not cross your electrical wiring with your signal wiring. This may cause distortion, interference or possibly damage to circuit boards.
The unit must be connected to the main outlet. Normally, the power supply must have a impedance of 32 ohms.
No other equipment should be connected to the same power circuit.
Connect the outdoor wires before connecting the indoor wires.

⚠ WARNING

BEFORE PERFORMING ANY ELECTRICAL OR WIRING WORK, TURN OFF THE MAIN POWER TO THE SYSTEM.

NOTE ON CIRCUIT BREAKER

A circuit breaker or leakage protection switch with protective device shall be used(purchased separately).

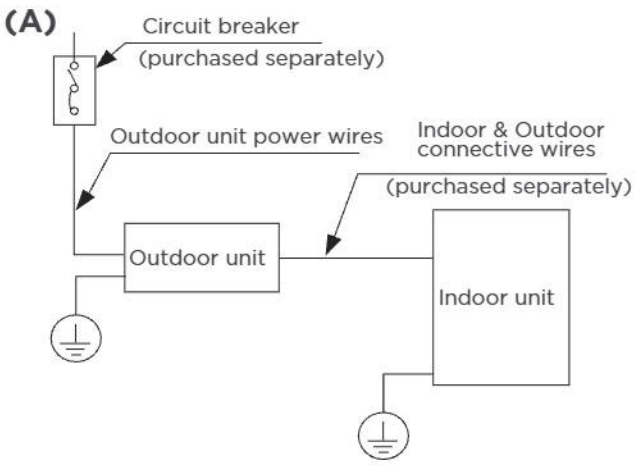

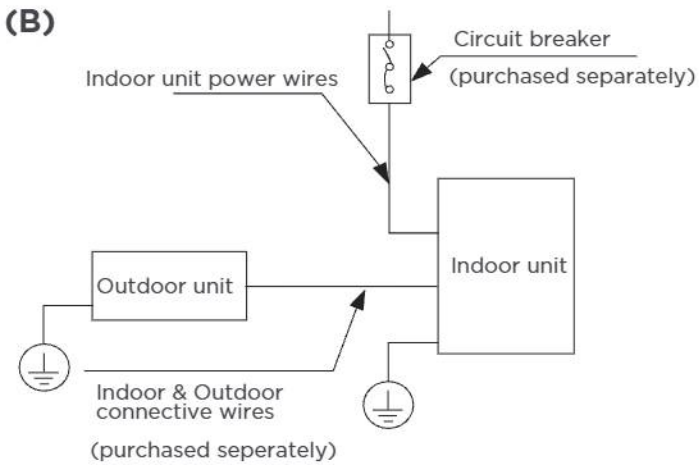

(C)

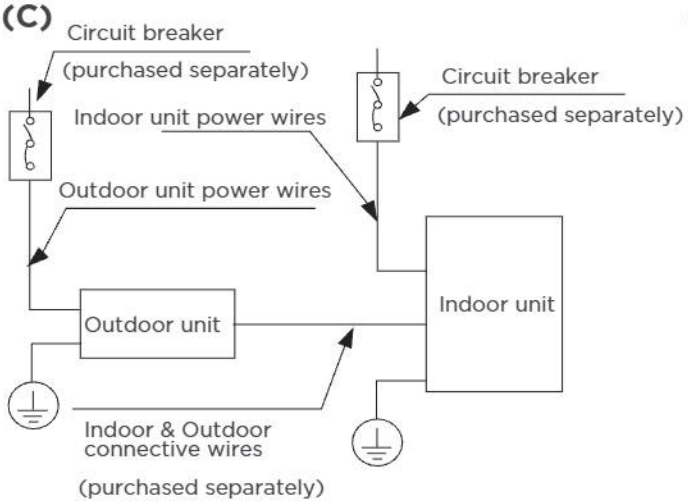

(D) Only for the North American

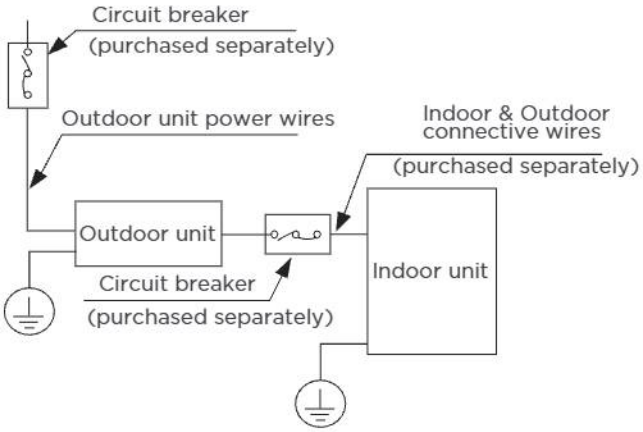

NOTE: The cographs are for explanation purpose only. Your machine may be slightly different. The actual shape shall prevail.

OUTDOOR UNIT WIRING

⚠ WARNING

Before performing any electrical or wiring work, turn off the main power to the system.

1. Prepare the cable for connection

a. You must first choose the right cable size. Be sure to use H07RN-F cables.

NOTE: In North America, choose the cable type according to the local electrical codes and regulations.

Minimum Cross-Sectional Area of Power and Signal Cables-For reference (Not applicable for North America)

Rated Current of Appliance (A)	Nominal Cross-Sectional Area (mm²)
> 3 and ≤ 6	0.75
> 6 and ≤ 10	1
> 10 and ≤ 16	1.5
> 16 and ≤ 25	2.5
> 25 and ≤ 32	4
> 32 and ≤ 40	6

CHOOSE THE RIGHT CABLE SIZE

The size of the power supply cable, signal cable, fuse, and switch needed is determined by the maximum current of the unit. The maximum current is indicated on the nameplate located on the side panel of the unit. Refer to this nameplate to choose the right cable, fuse, or switch.
NOTE: In North America, please choose the right cable size according to the Minimum Circuit Ampacity indicated on the nameplate of the unit.

b. Using wire strippers, strip the rubber jacketfrom both ends of the signal cable to reveal approximately 15cm (5.9") of wire.
c. Strip the insulation from the ends.
d. Using a wire crimper, crimp u-lugs on the ends.

NOTE: When connecting the wires, strictly follow the wiring diagram found inside the electrical box cover.

2. Remove the electric cover of the outdoor unit. If there is no cover on the outdoor unit, take off the bolts from the maintenance boardand remove the protection board.

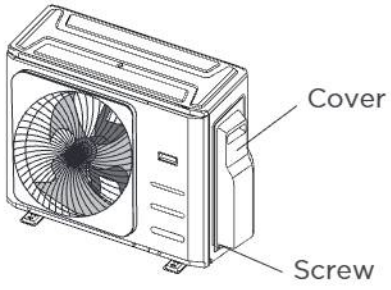

3. Connect the u-lugs to the terminals
   Match the wire colors/labels with the labels on the terminal block. Firmly screw the u-lug of each wire to its corresponding terminal.
4. Clamp down the cable with the cable clamp.
5. Insulate unused wires with electrical tape. Keep them away from any electrical or metal parts.
6. Reinstall the cover of the electric control box. Some models have knock-out panel on the electric cover, it can be cut off to lead out supply cords if necessary.

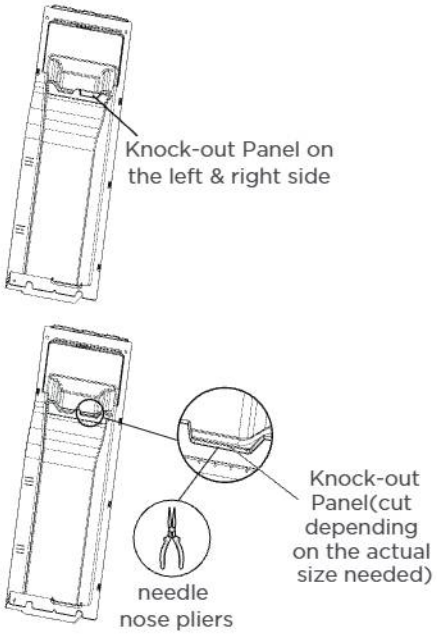

Harmonic declaration

"The equipment M4OB-36HFN8-Q complies with IEC 61000-3-12 provided that the shortcircuit power Ssc is greater than or equal to 4787737.5 at the interface point between the user's supply and the public system. It is the responsibility of the installer or user of the equipment to ensure, by consultation with the distribution network operator if necessary, that the equipment is connected only to a supply with a short-circuit power Ssc greater than or equal to 4787737.5."

"The equipment M5OD-42HFN8-Q complies with IEC 61000-3-12 provided that the shortcircuit power Ssc is greater than or equal to 3190042.5 at the interface point between the user's supply and the public system. It is the responsibility of the installer or user of the equipment to ensure, by consultation with the distribution network operator if necessary, that the equipment is connected only to a supply with a shortcircuit power Ssc greater than or equal to 3190042.5."

Wiring Figure

⚠ CAUTION

Connect the connective cables to the terminals, as identified, with their matching numbers on the terminal block of the indoor and outdoor units. For example, Terminal L1(A) of the outdoor unit must connect with terminal L1/1 on the indoor unit. The outdoor unit can match different types of indoor unit, the numbers on the terminal block of the indoor unit may be slightly different. Please pay special attention while connecting the wire.

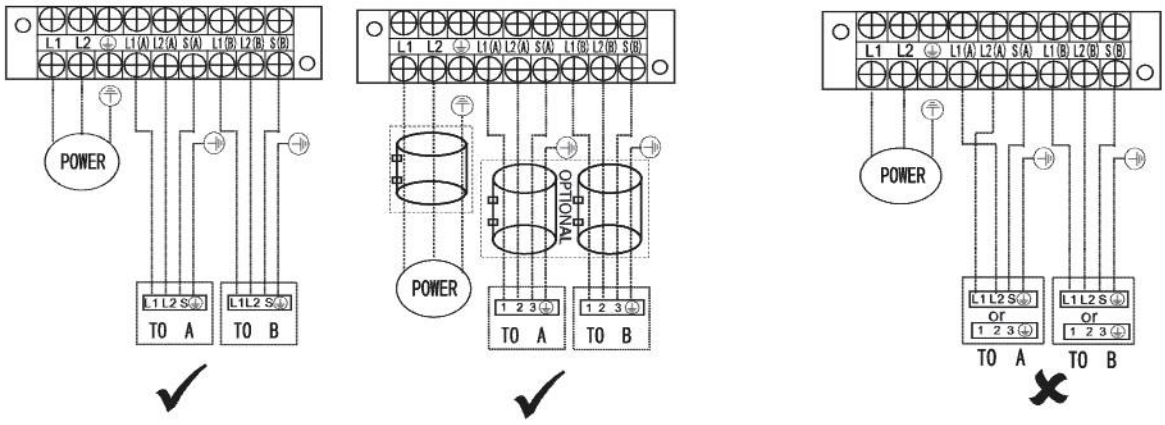

NOTE: For quick-connector models, please refer to "USER MANUAL" packed with the indoor unit. Refer to the following figures if end-users wish to perform their own wiring. Run the main supply cord through the lower line-outlet of the cord clamp. ---- This symbol indicates field wiring.

One-two models:

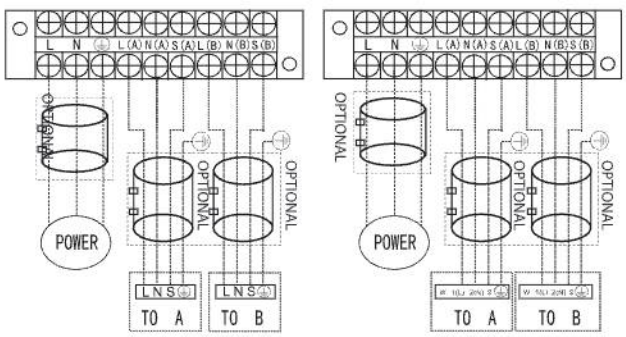

Model A

Model B

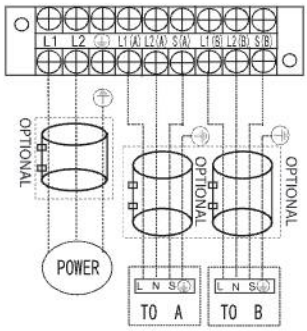

Model C

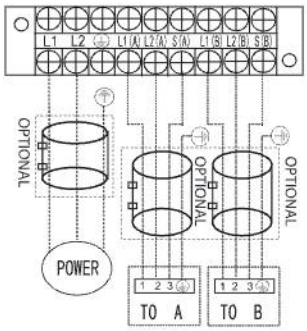

Model D

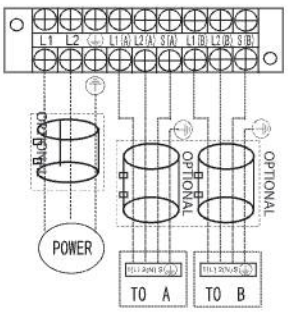

Model E

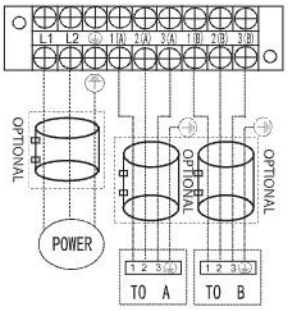

Model F

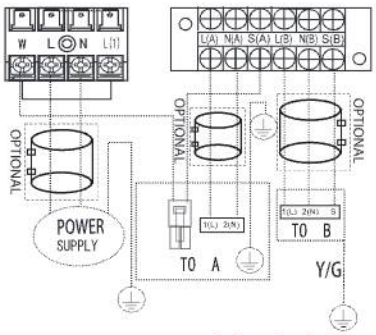

Model G

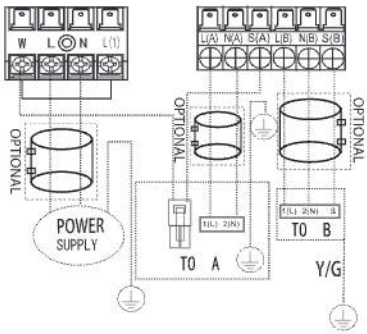

Model H



NOTE: Use the magnetic ring (not supplied, optional part) to hitch the connective cable of indoor and outdoor units after installation.
One magnetic ring is used for one cable.

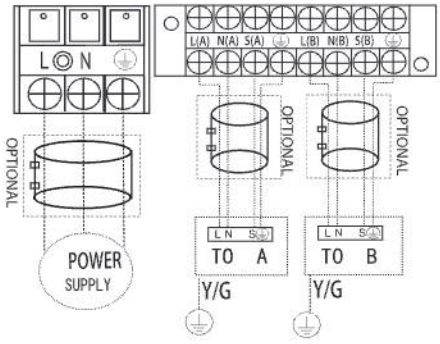

Model I

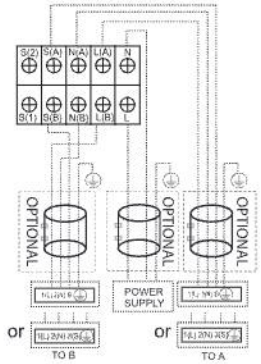

Model J

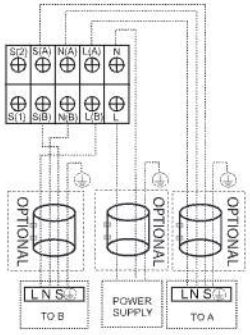

Model K

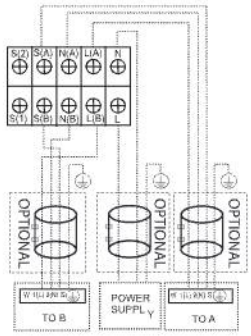

Model L

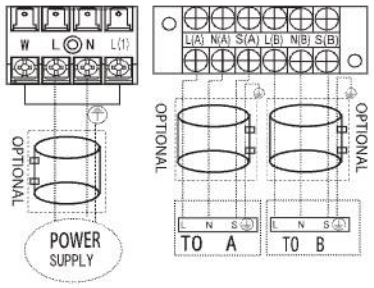

Model M

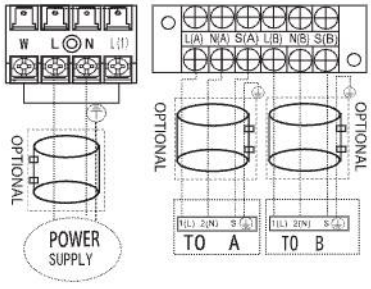

Model N

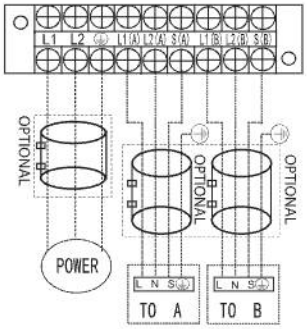

Model O

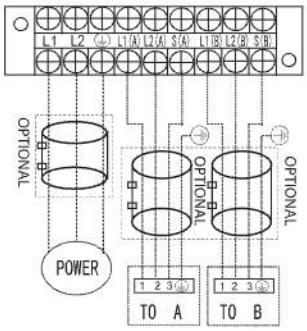

Model P

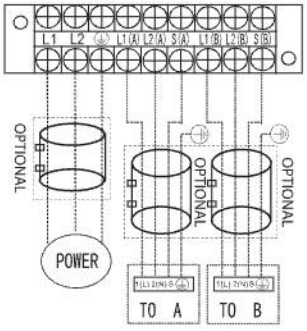

Model Q

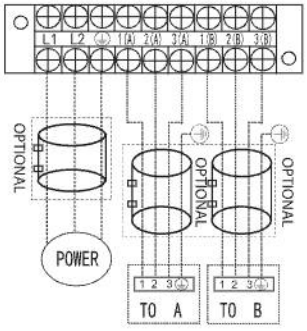

Model R

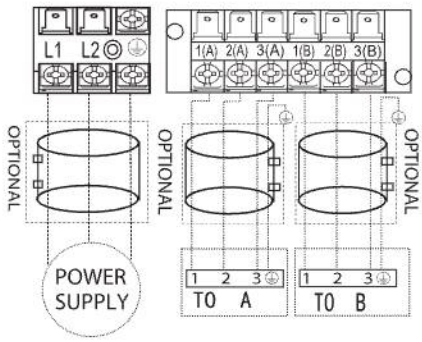

Model S

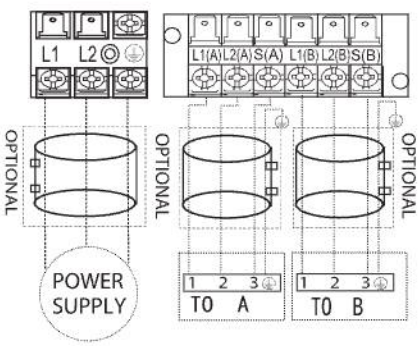

Model T

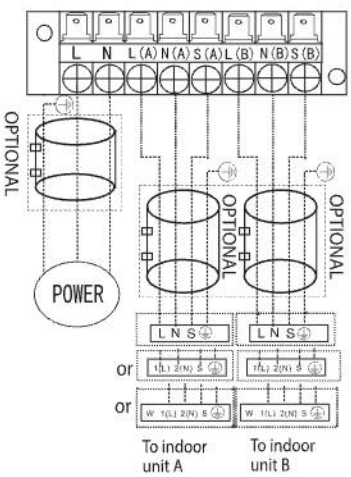

Model U

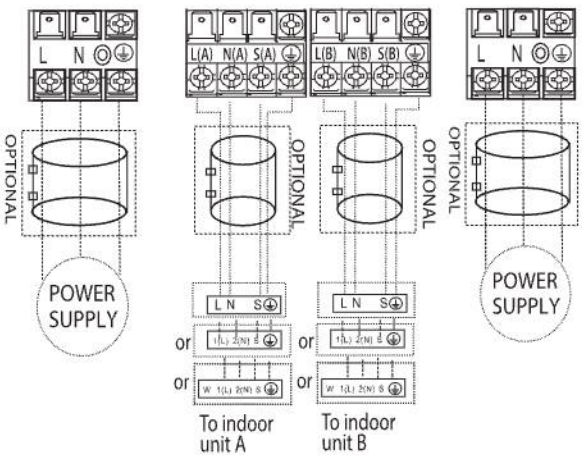

Model V

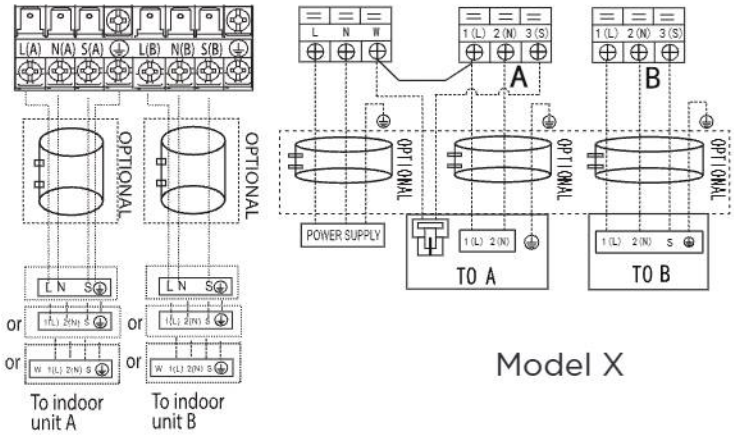

Model W

Model X

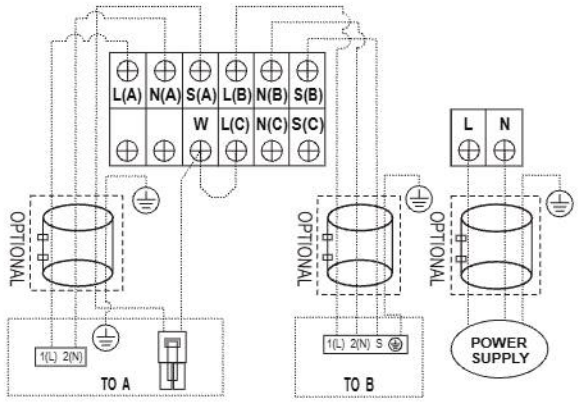

Model Y

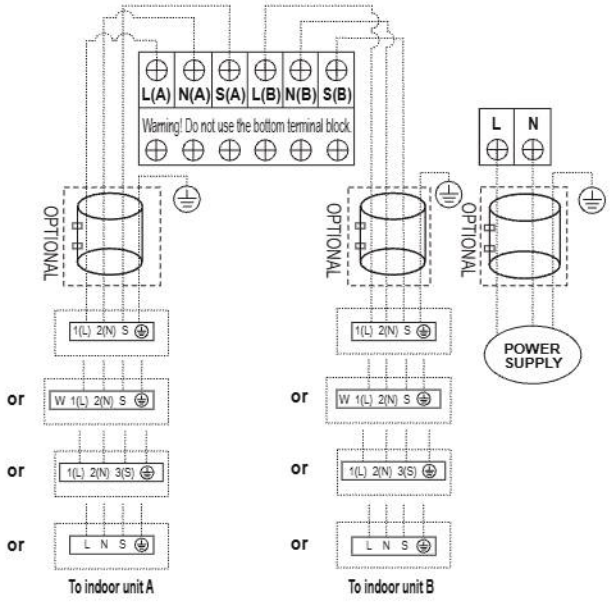

Model Z

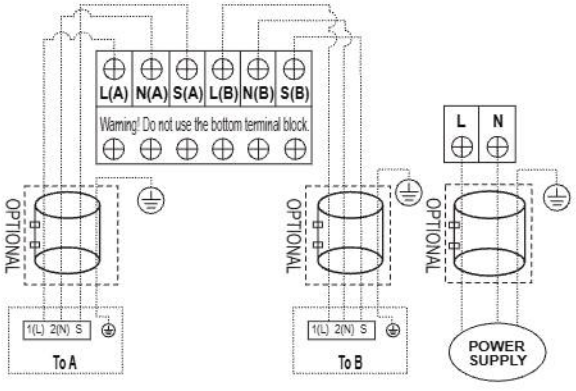

Model AA

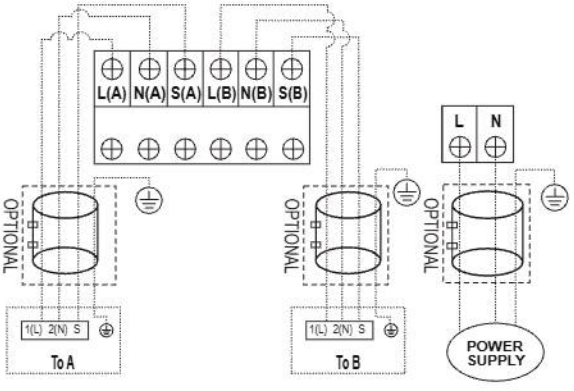

Model AB

One-three models:

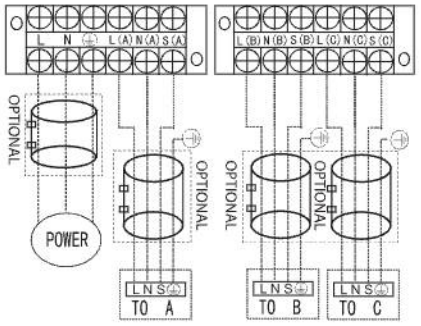

Model A

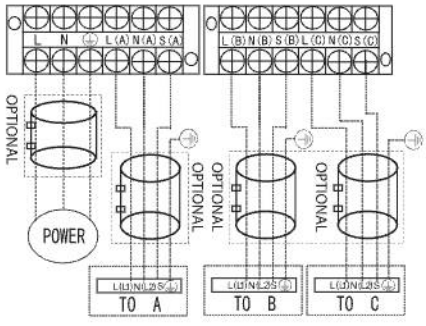

Model B

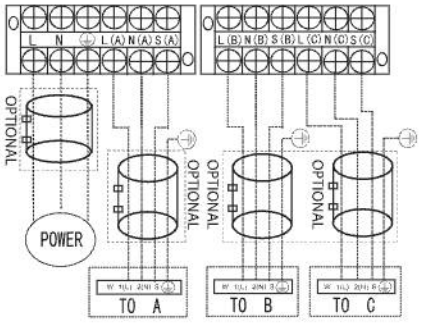

Model C

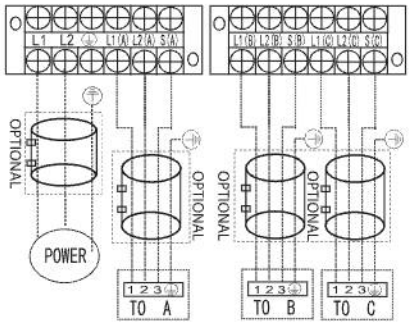

Model D

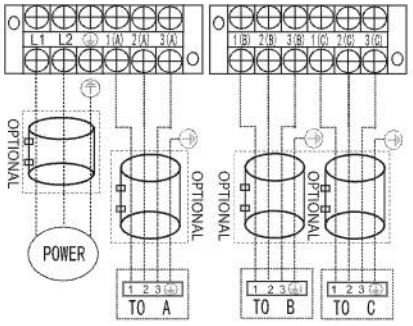

Model E

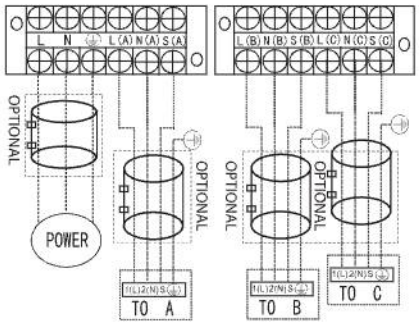

Model F

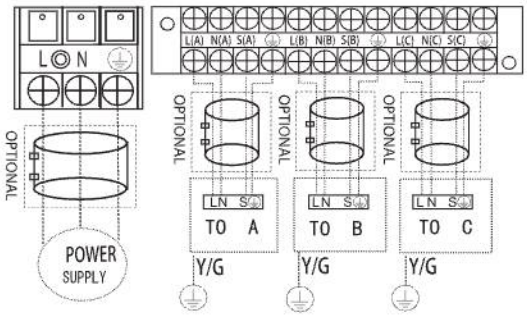

Model G

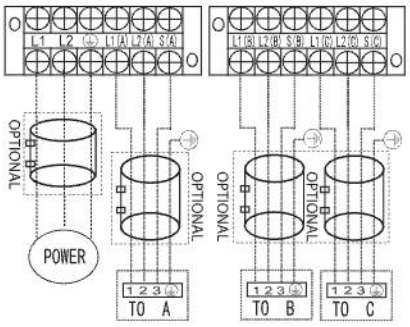

Model H

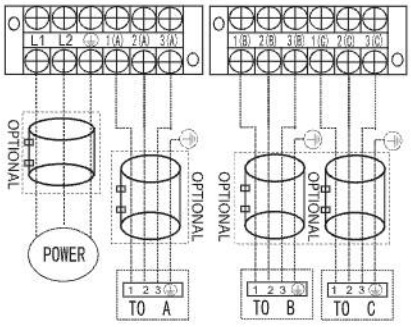

Model I

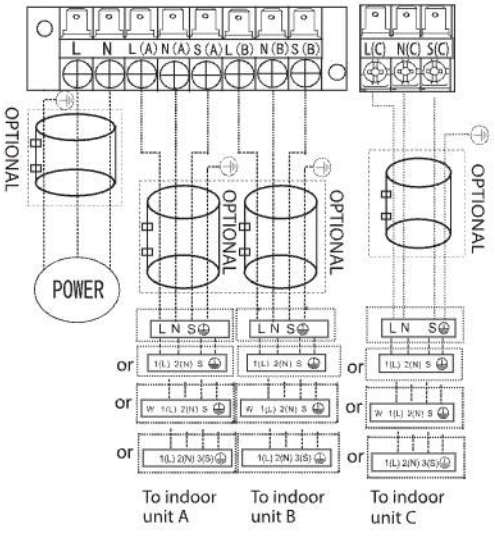

Model J

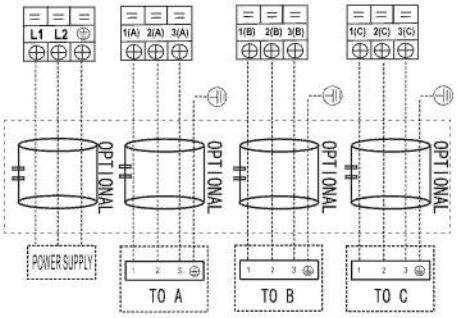

Model K

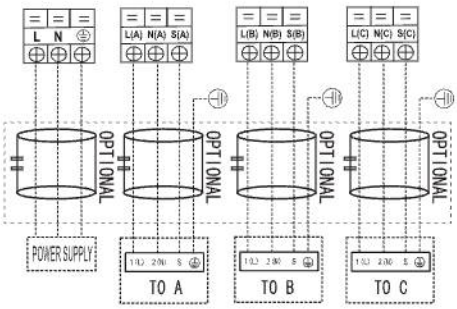

Model L

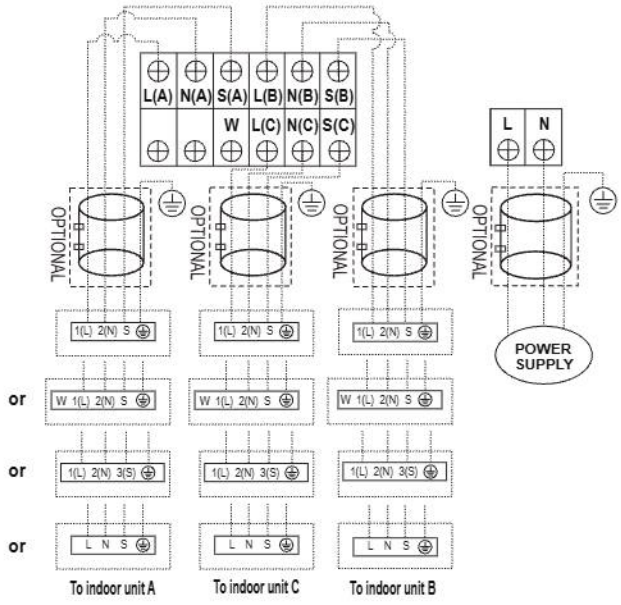

Model M

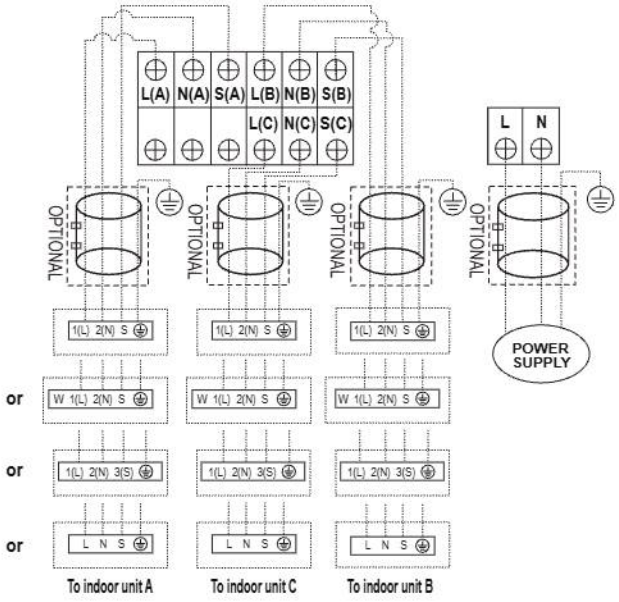

Model N

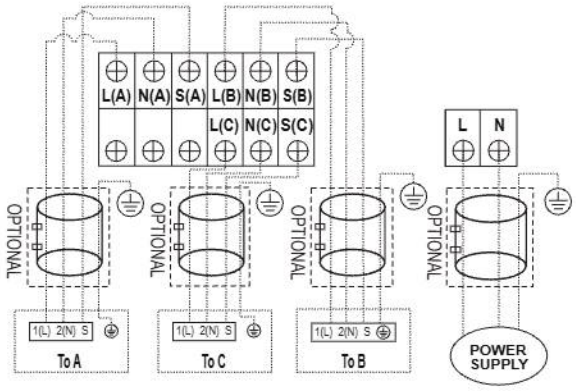

Model O

One-four models:

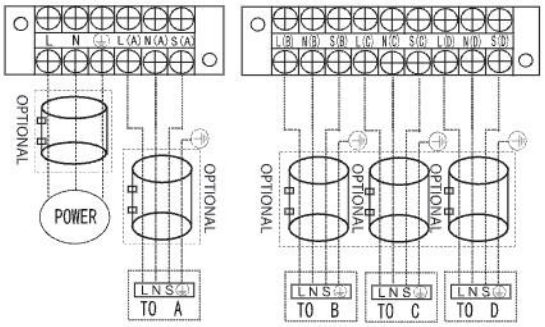

Model A

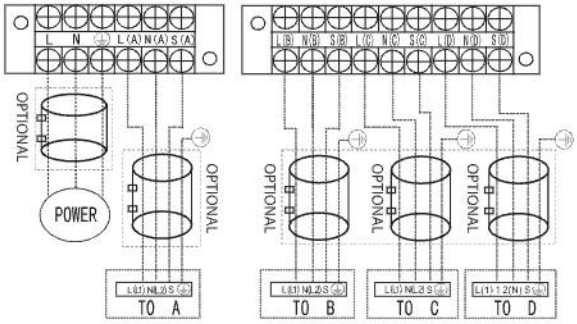

Model B

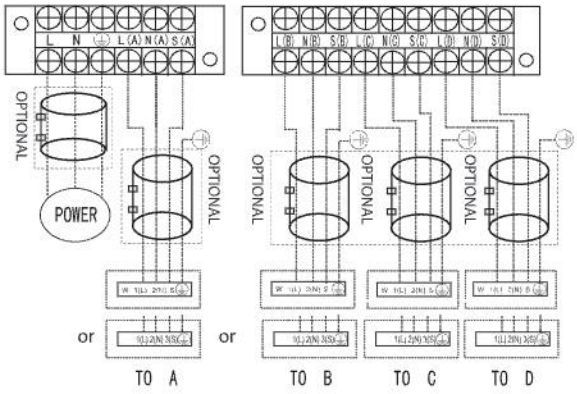

Model C

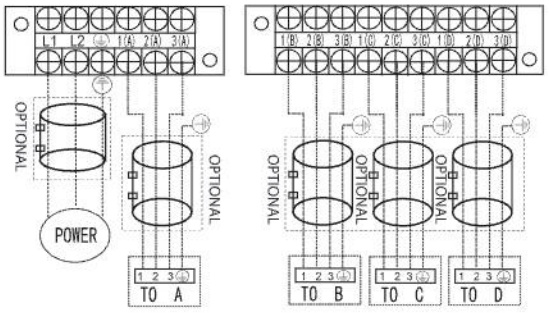

Model D

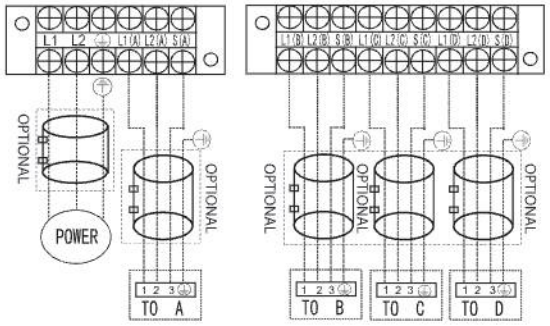

Model E

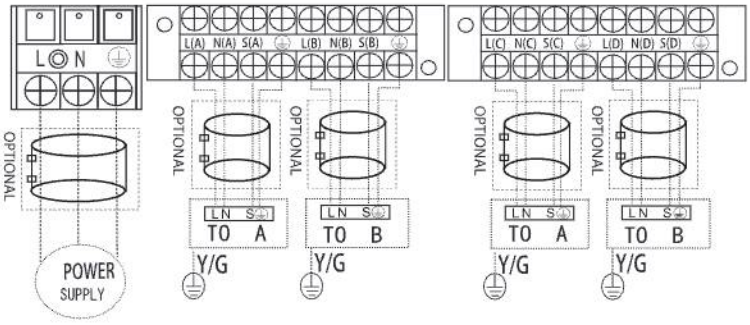

Model F

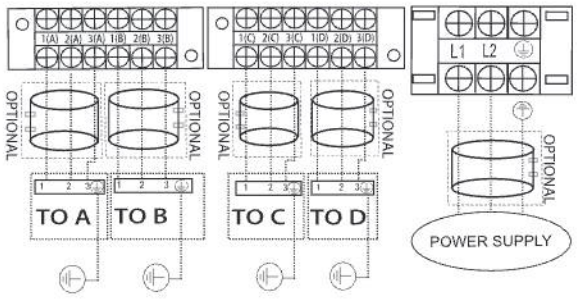

Model G

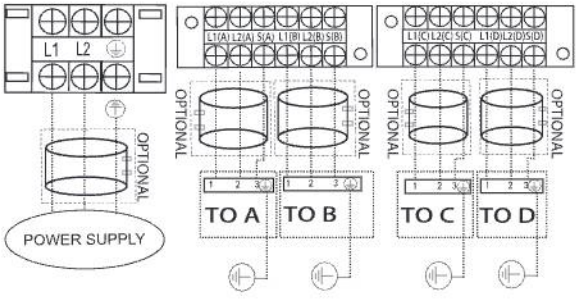

Model H

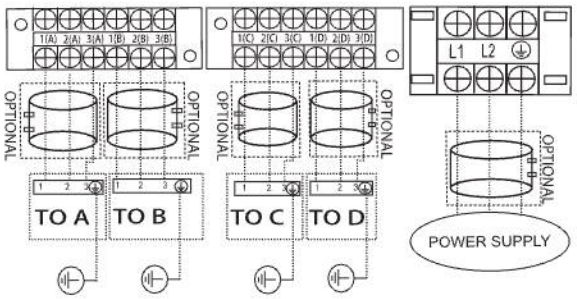

Model I

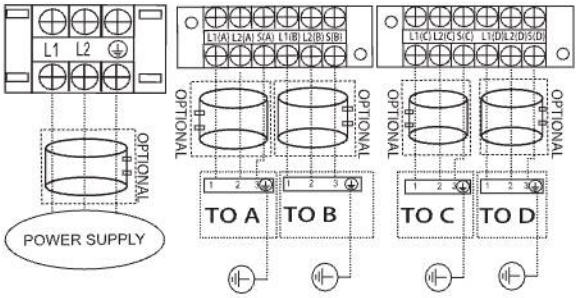

Model J

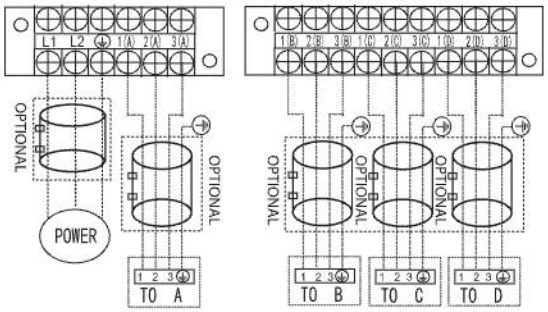

Model K

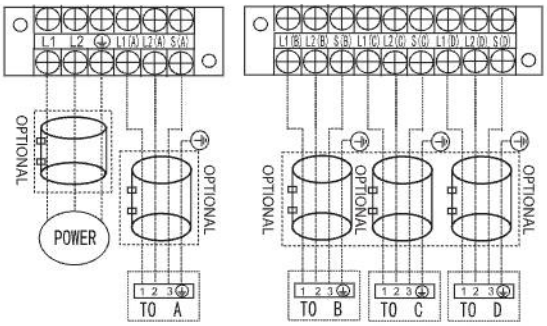

Model L

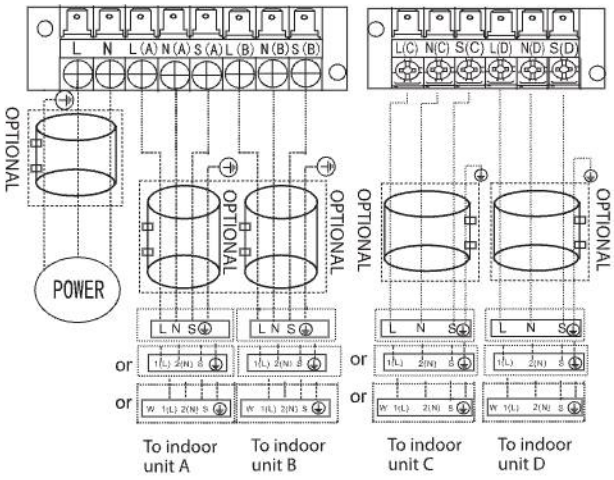

Model M

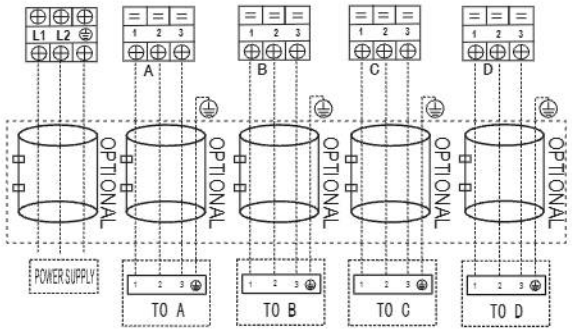

Model N

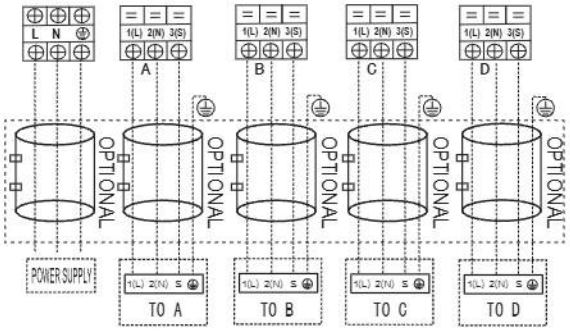

Model O

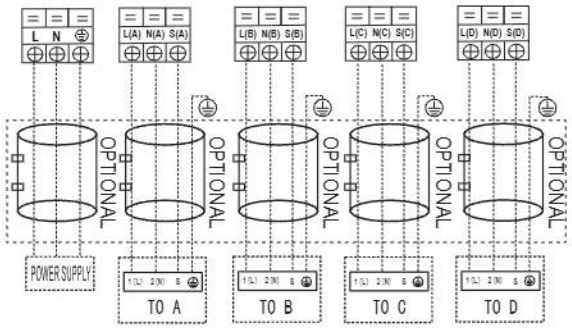

Model P

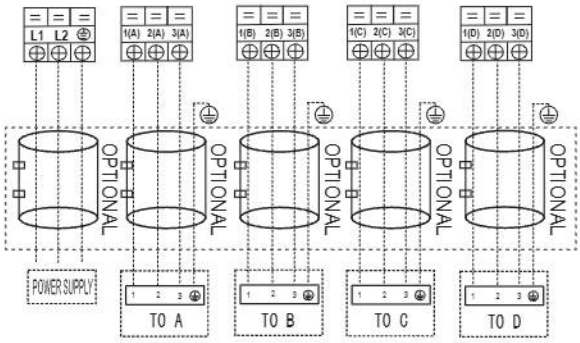

Model Q

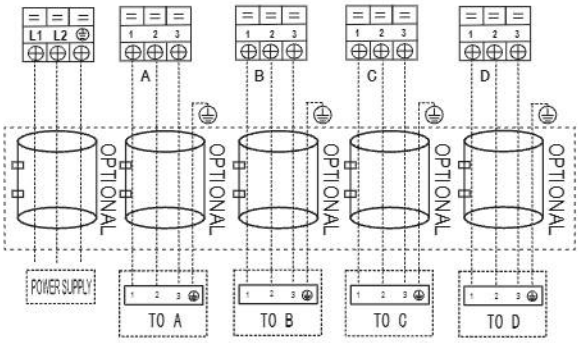

Model R

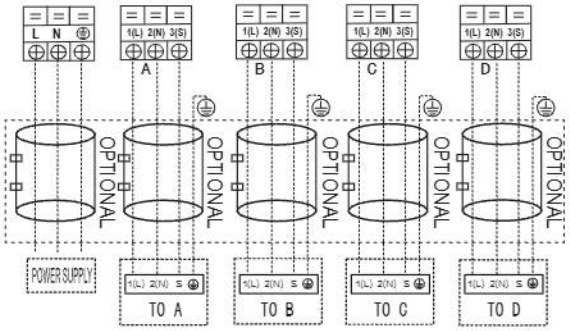

Model S

One-five models:

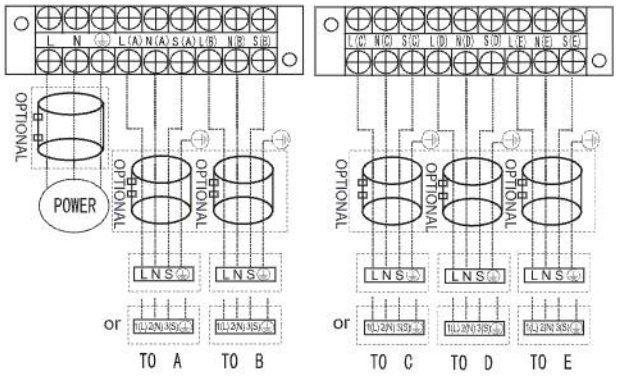

Model A

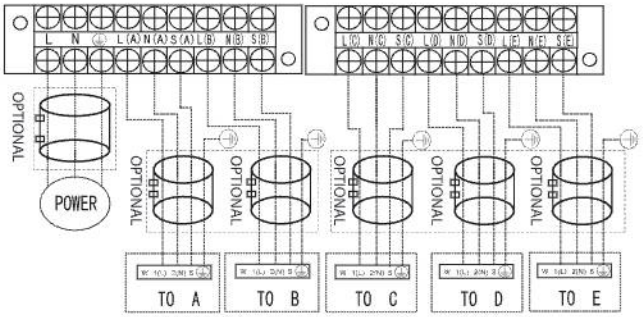

Model B

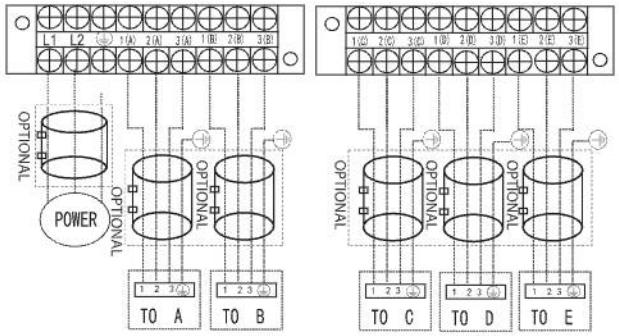

Model C

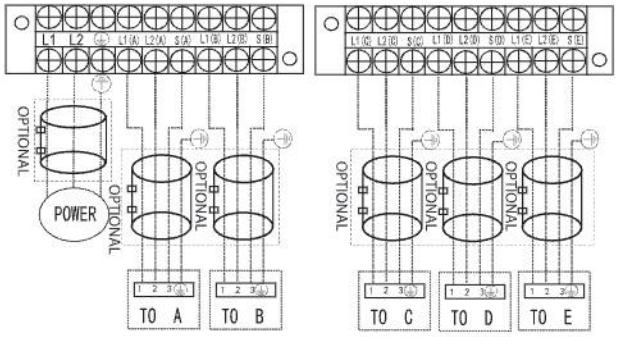

Model D

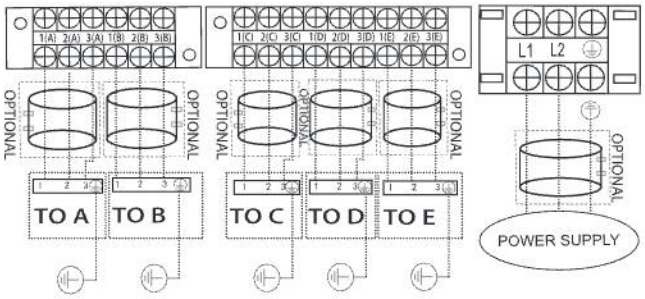

Model E

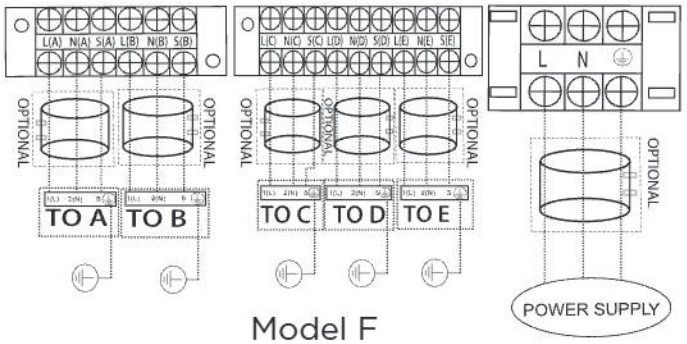

Model F

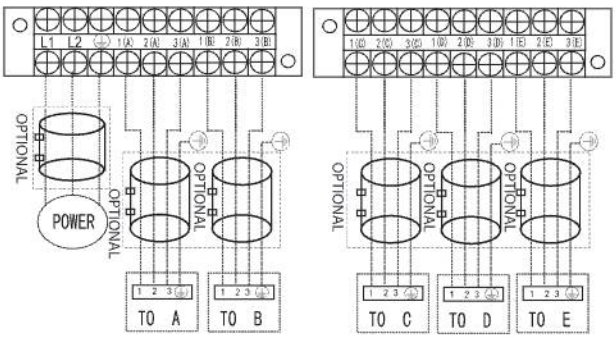

Model G

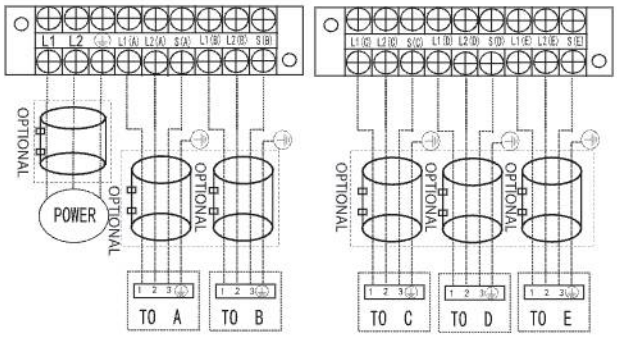

Model H

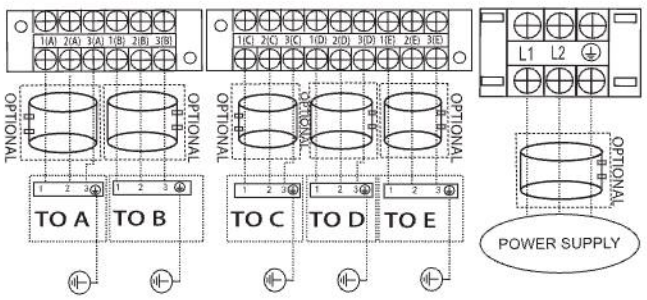

Model I

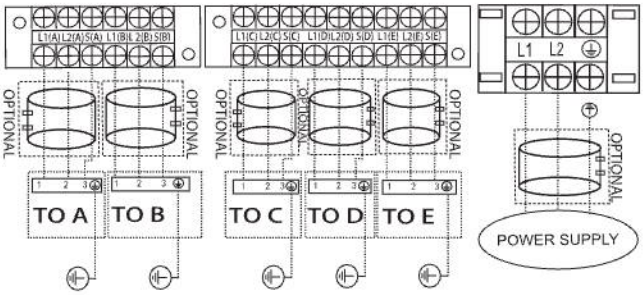

Model J

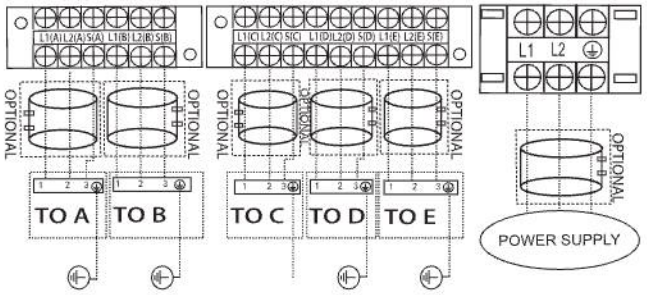

Model K

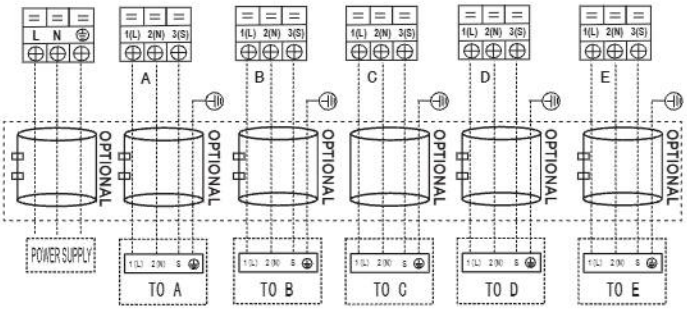

Model L

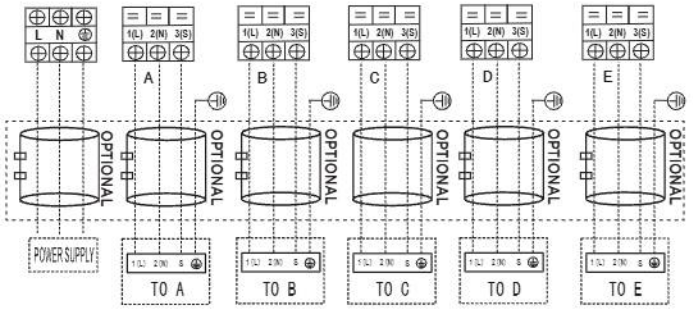

Model M

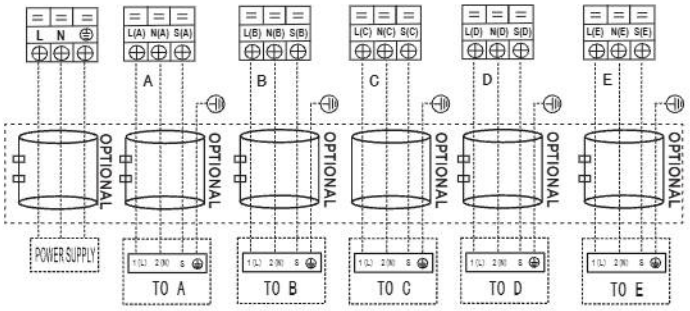

Model N

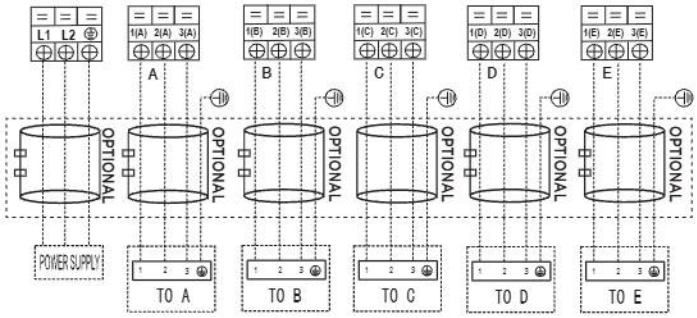

Model O

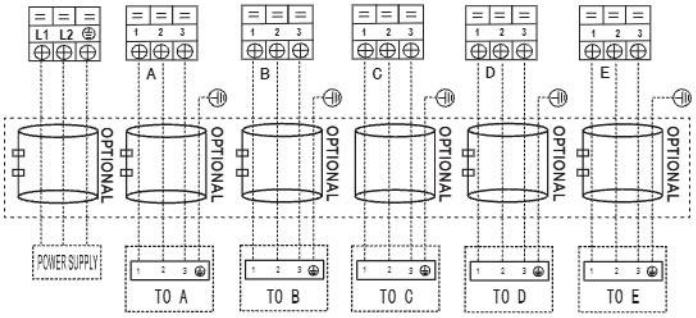

Model P

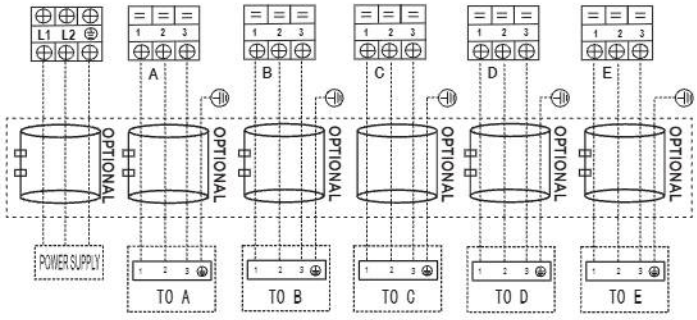

Model Q

One-six models:

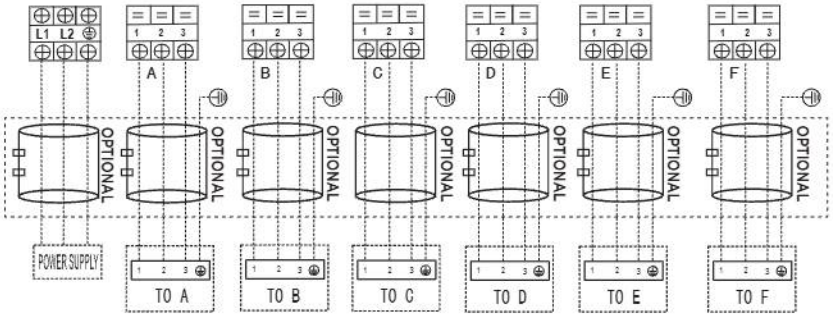

Model A

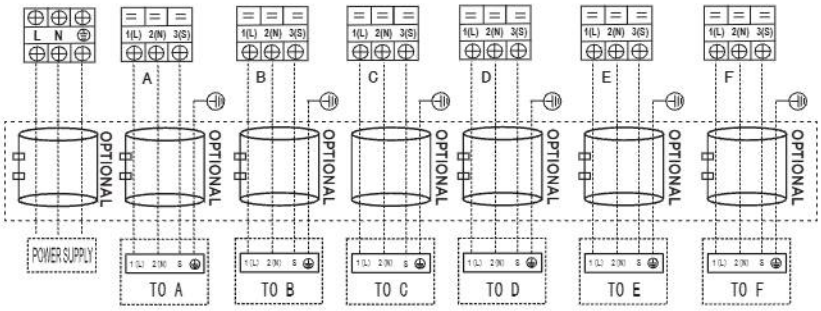

Model B

⚠ CAUTION

After confirmation of the above conditions, follow these guidelines when performing wiring:

Always have an individual power circuit specifically for the air conditioner.
Always follow the circuit diagram posted on the inside of the control cover.
Screws fastening the wiring in the casing of electrical fittings may come loose during transporation. Because loose screws may cause wire burn-ou, check that the screws are tightly fastened.

Check the specifications for the power source.
Confirm that electrical capacity is sufficient.
Confirm that starting voltage is maintained at more than 90 percent of the rated voltage marked on the name plate.

Confirm that the cable thickness is as specified in the power source specifications.

Always install an earth leakage circuit breaker in wet or moist areas.

The following can be caused by a drop in voltage: vibration of a magnetic switch, damaging the contact point, broken fuses, and disturbance of normal functioning.

Disconnection from a power supply must be incorporated into the fixed wiring. It must have an air gap contact separation of at least 3mm in each active (phase) conductors.

Before accessing terminals, all supply circuits must be disconnected.

NOTE:

To satisfy the EMC compulsory regulations, which is required by the international standard CISPR 14-1:2005/A2:2011 in specific countries or districts ,please make sure you apply the correct magnetic rings on your equipment according to the wiring diagram that adhere to the your equipment.
Please contact your distributor or installer to get further information and purchase magnetic rings (The supplier of magnetic ring is TDK model ZCAT3035-1330 or similar) .

AIR EVACUATION

NOTICE

When opening valve stems, turn the hexagonal wrench until it hits against the stopper. Do not try to force the valve to open further.

Preparations and precautions

Air and foreign matter in the refrigerant circuit can cause abnormal rises in pressure, which can damage the air conditioner, reduce its efficiency, and cause injury. Use a vacuum pump and manifold gauge to evacuate the refrigerant circuit, removing any non-condensable gas and moisture from the system. Evacuation should be performed upon initial installation and when unit is relocated.

BEFORE PERFORMING EVACUATION

- ☑ Check to make sure the connective pipes between the indoor and outdoor units are connected properly .
- ☑ Check to make sure all wiring is connected properly.

Evacuation Instructions

1. You can choose to evacuate all indoor unit systems directly through the main valve, which requires opening all branch valves of connected indoor units, or evacuate each indoor unit system sequentially through the corresponding branch valve, which requires opening the main valve.
2. Connect the charge hose of the manifold gauge to service port on the outdoor unit's low-pressure valve.
3. Connect another charge hose from the manifold gauge to the vacuum pump.
4. Open the Low-Pressure side of the manifold gauge. Keep the High-Pressure side closed.

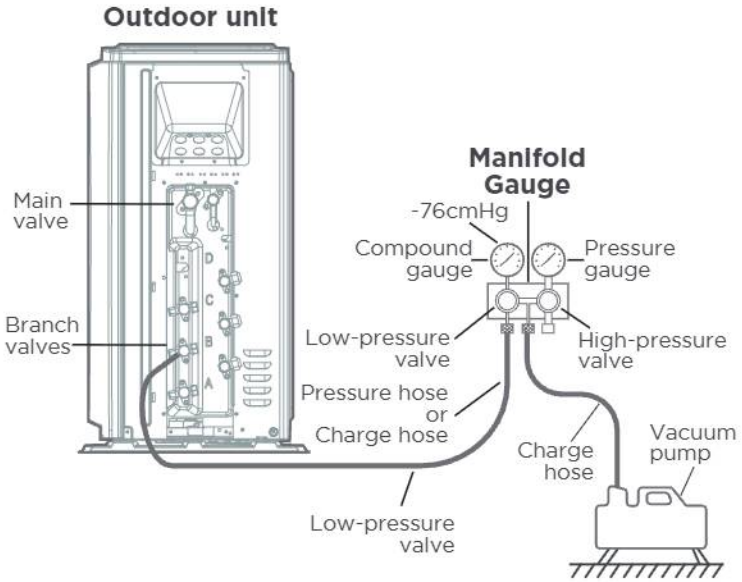

5. Turn on the vacuum pump to evacuate the system.
6. Run the vacuum for at least 15 minutes when choosing evacuation through each branch valves , or until the Compound Meter reads -76cmHG (-105Pa). When choosing evacuation through the main valve, run the vacuum for at least 30 minutes.
7. Close the Low-Pressure side of the manifold gauge, and turn off the vacuum pump.
8. Wait for 5 minutes, then check that there has been no change in system pressure.
9. If there is a change in system pressure, refer to Gas Leak Check section for information on how to check for leaks. If there is no change in system pressure, unscrew the cap from the packed valve (high-pressure valve).
10. Insert hexagonal wrench into the packed valve (high-pressure valve) and open the valve by turning the wrench in a 1/4 counterclockwise turn. Listen for gas to exit the system, then close the valve after 5 seconds. If choosing to evacuate from the main valve, open the high-pressure main valve using the method described above; if opting to evacuate from the branch valve, first fully open the high-pressure main valve, then open the corresponding branch valve following the same method.
11. Watch the Pressure Gauge for one minute to make sure that there is no change in pressure. The Pressure Gauge should read slightly higher than atmospheric pressure.
12. Remove the charge hose from the service port.

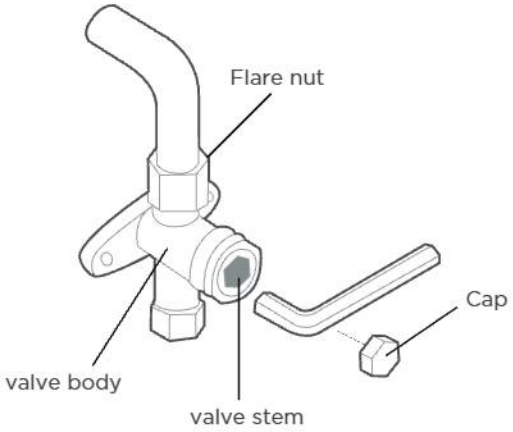

13. Using hexagonal wrench, fully open both the high-pressure and low-pressure valves.
14. Tighten valve caps on all three valves (service port, high-pressure, low-pressure) by hand. You may tighten it further using a torque wrench if needed.

NOTE ON ADDING REFRIGERANT

NOTICE

- Refrigerant charging must be performed after wiring, vacuuming, and the leak testing.
- **DO NOT** exceed the maximum allowable quantity of refrigerant or overcharge the system. Doing so can damage the unit or impact it's functioning.
- Charging with unsuitable substances may cause explosions or accidents. Ensure that the appropriate refrigerant is used.
- Refrigerant containers must be opened slowly. Always use protective gear when charging the system.
- **DO NOT** mix refrigerants types.
- For the R32 refrigerant model, make sure the condtions within the area have been made safe by control of flammable material when the refrigerant added into air conditioner.
- It is recommended to add refrigerant in cooling mode. During cooling operation, all branch valves connected to the indoor units and the main valve must be opened.

N=2(one-twin models), N=3(one-three models), N=4(one-four models), N=5(one-five models).
Depending on the length of connective piping or the pressure of the evacuated system, you made need to add refrigerant. Refer to table below for refrigerant amounts to be added:

ADDITIONAL REFRIGERANT PER PIPE LENGTH (For universal edition)

Connective Pipe Length(m)	Air Purging Method	Additional Refrigerant	
The standard pipe length One-to-two outdoor unit:15m/49.2ft One-to-three outdoor unit:22.5m/73.8ft One-to-four outdoor unit: 30m/98.4ft One-to-five outdoor unit: 37.5m/123ft One-to-six outdoor unit: 45m/147.6ft	Vacuum pump	N/A	
More than the standard pipe length	Vacuum pump	Liquid Side:Φ6.35(1/4") R32 (Total pipe length - The standard pipe length)×12g/m (Total pipe length - The standard pipe length)×0.13oz/ft	Liquid Side:Φ9.52(3/8") R32 (Total pipe length - The standard pipe length)×24g/m (Total pipe length - The standard pipe length)×0.26oz/ft
		Liquid Side:Φ6.35(1/4") R410A (Total pipe length - The standard pipe length)×15g/m (Total pipe length - The standard pipe length)×0.16oz/ft	Liquid Side:Φ9.52(3/8") R410A (Total pipe length - The standard pipe length)×30g/m (Total pipe length - The standard pipe length)×0.32oz/ft

ADDITIONAL REFRIGERANT PER PIPE LENGTH (For oceania region)

Connective Pipe Length(m)	Air Purging Method	Additional Refrigerant	
The standard pipe length One-to-two outdoor unit:20m/65.6ft One-to-three outdoor unit:30m/98.4ft One-to-four outdoor unit: 40m/131.2ft One-to-five outdoor unit: 50m/164.0ft One-to-six outdoor unit: 60m/196.9ft(R32 UNIT) One-to-six outdoor unit: 90m/295.27ft(R410A UNIT)	Vacuum pump	N/A	
More than the standard pipe length	Vacuum pump	Liquid Side:Φ6.35(1/4") R32 (Total pipe length - The standard pipe length)×12g/m (Total pipe length - The standard pipe length)×0.13oz/ft	Liquid Side:Φ9.52(3/8") R32 (Total pipe length - The standard pipe length)×24g/m (Total pipe length - The standard pipe length)×0.26oz/ft
		Liquid Side:Φ6.35(1/4") R410A (Total pipe length - The standard pipe length)×15g/m (Total pipe length - The standard pipe length)×0.16oz/ft	Liquid Side:Φ9.52(3/8") R410A (Total pipe length - The standard pipe length)×30g/m (Total pipe length - The standard pipe length)×0.32oz/ft

NOTE: The standard pipe length refers to the pipe length for which refrigerant has been added when the machine leaves the factory, When the actual pipe length is not greater than this pipe length, there is no need to add refrigerant. Total pipe length refers to the actual total length of the pipe used. Whether to add refrigerant is determined by the total pipe length, regardless of the number of connected indoor units.

Safety And Leakage Check

Electrical safety check

Perform the electrical safety check after completing installation. Cover the following areas:

1. Insulated resistance
   The insulated resistance must be more than 2MΩ.
2. Grounding work
   After finishing grounding work, measure the grounding resistance by visual detection and using the grounding resistance tester. Make sure the grounding resistance is less than 4Ω.
3. Electrical leakage check (performing during test while unit is on)
   During a test operation after completed installation, the use the electroprobe and multimeter to perform an electrical leakage check. Turn off the unit immediately if leakage happens. Try and evaluate different solutions until the unit operates properly.

Gas leak check

1. Soap water method:
   Apply a soap-water solution or a liquid neutral detergent on the indoor unit connection or outdoor unit connections with a soft brush to check for leakage of the connecting points of the piping. If bubbles emerge, the pipes are experiencing leakage.
2. Leak detector
   Use the leak detector to check for leakage.

NOTE: The illustration is for example purposes only. The actual order of A, B, C, D, E, and F on the machine may be slightly different from the unit you purchased but the general shape will remain the same.

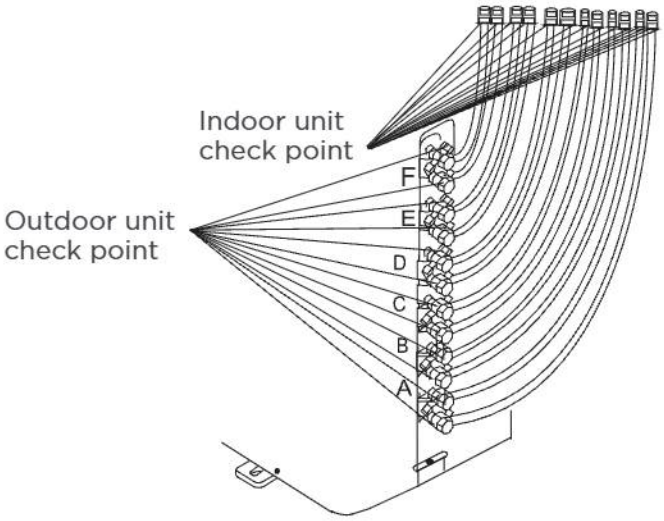

A, B,C,D are points for one-four type.
A, B,C,D, and E are points for the one-five type.
A, B,C,D, E, and F are points for the one-six type.

TEST RUN

⚠ CAUTION

Failure to perform the test run may result in unit damage, property damage, or personal injury.

Before Test Run

A test run must be performed after the entire system has been completely installed. Confirm the following points before performing the test:

a) The indoor and outdoor units are properly installed.

b) Piping and wiring are properly connected.

c) No obstacles near the inlet and outlet of the unit that might cause poor performance or product malfunction.

d) The refrigeration system does not leak.

e) Drainage system is unimpeded and draining to a safe location.

f) The heating insulation is properly installed.

g) The grounding wires are properly connected.

h) Length of the piping and additional refrigerant stow capacity have been recorded.

i) The power voltage is the correct voltage for the air conditioner.

Test Run Instructions

1. Open both the liquid and gas stop valves. (Including the main valve and all branch valves connected to the indoor units.)
2. Turn on the main power switch and allow the unit to warm up.
3. Set the air conditioner to COOL mode.
4. For the Indoor Unit
   a. Ensure the remote control and its buttons work properly.
   b. Ensure the louvers move properly and can be changed using the remote control.
   c. Double check to see if the room temperature is being registered correctly.
   d. Ensure the indicators on the remote control and the display panel on the indoor unit work properly.
   e. Ensure the manual buttons on the indoor unit works properly.
   f. Check to see that the drainage system is unimpeded and draining smoothly.
   g. Ensure there is no vibration or abnormal noise during operation.
5. For the Outdoor Unit
   a. Check to see if the refrigeration system is leaking.
   b. Make sure there is no vibration or abnormal noise during operation.
   c. Ensure the wind, noise, and water generated by the unit do not disturb your neighbors or pose a safety hazard.

NOTE: If the unit malfunctions or does not operate according to your expectations, please refer to the Troubleshooting section of the Owner's Manual before calling customer service.

Recover Refrigerant

To recover refrigerant from the indoor unit to the outdoor unit, it must be done in cooling mode. For models with main valves, first close the liquid main valve tightly during refrigerant recovery, wait for a period of time until the air temperature from the outdoor unit fan is similar to the ambient temperature, then close the gas main valve. After that, the power can be turned off, and finally, all branch valves should be closed tightly.
For models without main valves, first close all liquid branch valves tightly, wait for a period of time until the air temperature from the outdoor unit fan is similar to the ambient temperature, then close all gas branch valves. After that, turn off the power.

FUNCTION OF AUTOMATIC WIRING/ PIPING CORRECTION

Automatic Wiring/Piping Correction Function

More recent models now feature automatic correction of wiring/piping errors. Press the "check switch" on the outdoor unit PCB board for 5 seconds until the LED displays “CE”, indicatomg that this function is working, Approximately 5-10 minutes after the switch is pressed, the “CE” disappears, meaning that the wiring/piping error is corrected and all wiring/piping is properly connected.

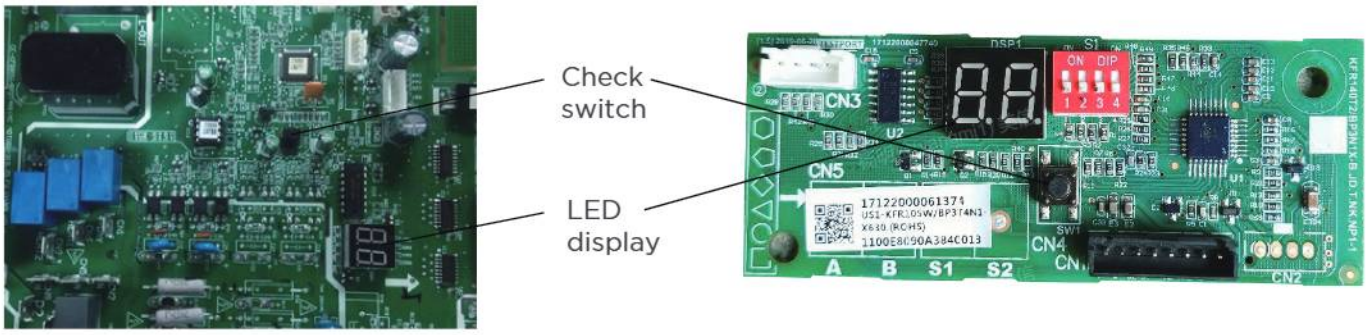

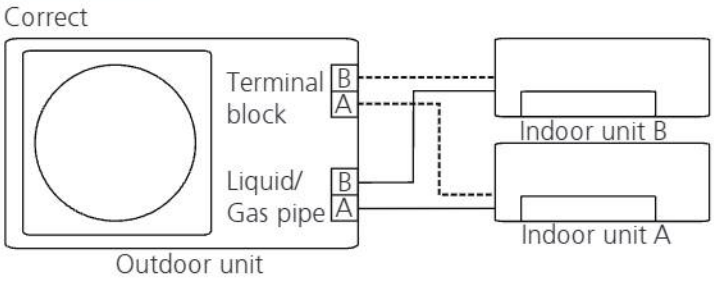

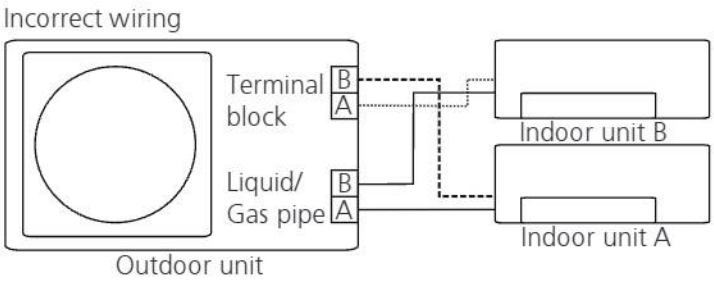

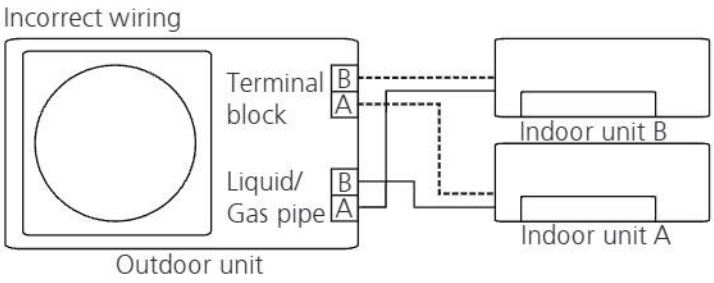

How To Activate This Function

1. Check that outside temperature is above 5°C.
   (This function does not work when outside temperature is not above 5°C)
2. Check that the stop valves of the liquid pipe and gas pipe are open.
3. Turn on the breaker and wait at least 2 minutes.
4. Press the check switch on the outdoor PCB board unit LED display “CE”.

TRADEMARKS, COPYRIGHTS AND LEGAL STATEMENT

Midea logo, word marks, trade name, trade dress and all versions thereof are valuable assets of Midea Group and/or its affiliates ("Midea"), to which Midea owns trademarks, copyrights and other intellectual property rights, and all goodwill derived from using any part of an Midea trademark. Use of Midea trademark for commercial purposes without the prior written consent of Midea may constitute trademark infringement or unfair competition in violation of relevant laws.

This manual is created by Midea and Midea reserves all copyrights thereof. No entity or individual may use, duplicate, modify, distribute in whole or in part this manual, or bundle or sell with other products without the prior written consent of Midea.

All the described functions and instructions were up to date at the time of printing this manual. However, the actual product may vary due to improved functions and designs.

DISPOSAL AND RECYCLING

Important instructions for environment (European Disposal Guidelines)

Compliance with the WEEE Directive and Disposing of the Waster Product:
This product complies with EU WEEE Directive (2012/19/EU). This product bears a classification symbol for waster electrical and electronic equipment (WEEE).

This symbol indicates that this product shall not be disposed with other household wastes at the end of its service life. Used device must be returned to official collection point for recycling of electrical electronic devices. To find these collection systems please contact to your local authorities or retailer where the product was purchased. Each household performs important role in recovering and recycling of old appliance. Appropriate disposal of used appliance helps prevent potential negative consequences for the environment and human health.



DATA PROTECTION NOTICE

For the provision of the services agreed with the customer,
we agree to comply without restriction with all stipulations of applicable data protection law, in line with agreed countries within which services to the customer will be delivered, as well as, where applicable, the EU General Data Protection Regulation (GDPR).

Generally, our data processing is to fulfil our obligation under contract with you and for product safety reasons, to safeguard your rights in connection with warranty and product registration questions. In some cases, but only if appropriate data protection is ensured, personal data might be transferred to recipients located outside of the European Economic Area.

Further information are provided on request. You can contact our Data Protection Officer via **MideaDPO@midea.com**. To exercise your rights such as right to object your personal date being processed for direct marketing purposes, please contact us via **MideaDPO@midea.com**. To find further information, please follow the QR Code.

The design and specifications are subject to change without prior notice for product improvement. Consult with the sales agency or manufacturer for details. Any updates to the manual will be uploaded to the service website, please check for the latest version.

Importer:
MIDEA HVAC & ENERGY AUSTRALIA
1513 Dandenong Rd, Oakleigh VIC 3166 Australia
E-mail: info@mdhome.com.au

Manufacturer: GD Midea Air-Conditioning Equipment Co,.Ltd.
Lingang Road Beijiao Shunde Foshan Guangdong
People's Republic of China 528311



https://www.midea.com/au
https://www.mdhome.com.au
© Midea 2022 all rights reserved

QS010UI-YTD
16122300A29871