

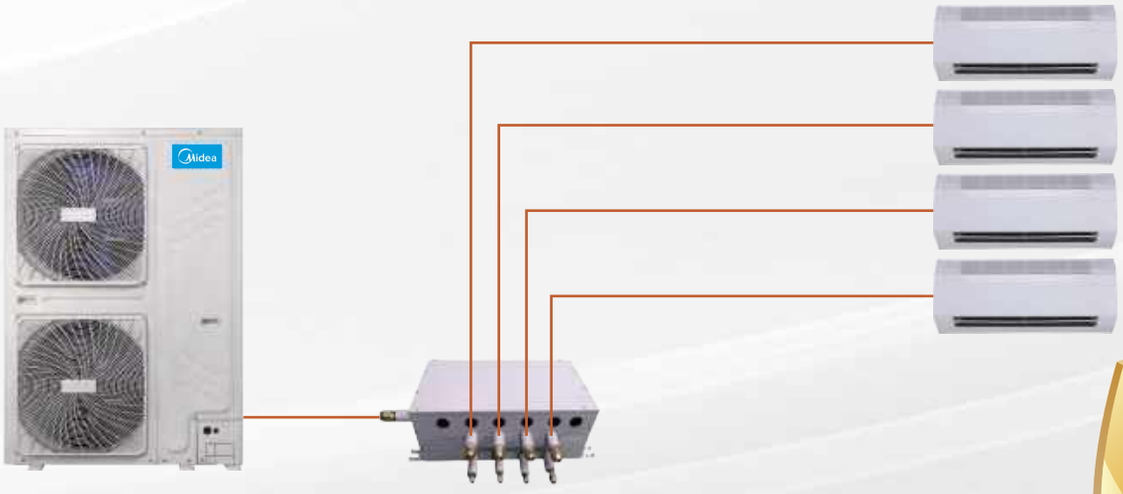

7 YEAR WARRANTY

*T&C Apply

MIDEA R410A VRF
MDV-V244WN1(AU)-A

All Flare* Connections, The Easiest VRF to Install

The system uses all flare connection which can greatly simplify installation. The multiple branch box with 1 to 2,3,4,5 or 6 options further simplify installation.

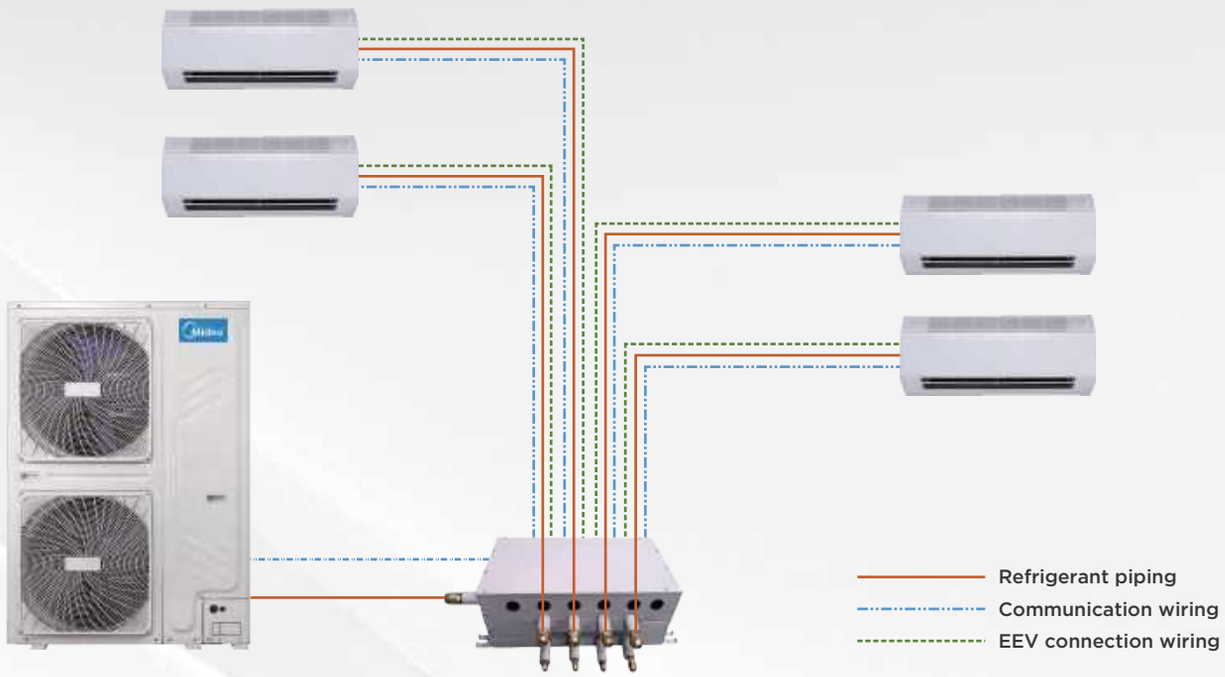

Note:
*Reused flared branch joints are not permitted for indoor use..

1 to 6 Indoor Units Connection

A single outdoor unit supports 1 to 6* indoor units, freeing up considerable space outside. Use your backyard more wisely with much more space available created by less number of outdoor units.

Branch Box	FQH-03A	FQH-04A FQH-04A-S	FQH-05A FQH-05A-S	FQH-06A FQH-06A-S
Max. number of indoorunit	3	4	5	6
Appearance				

*The combination ratio of indoor units and outdoor unit does not exceed 130%.

*The pictures of the Branch Box are for reference only, and the pictures are updated without notice.

Less Required Space for Mini VRF Installation

Mini VRF use flare connections instead of welding, which facilitates owners a lot to save their cost for installation, as well as avoid health hazard by welding such as strip-lighting or extra-high temperature.

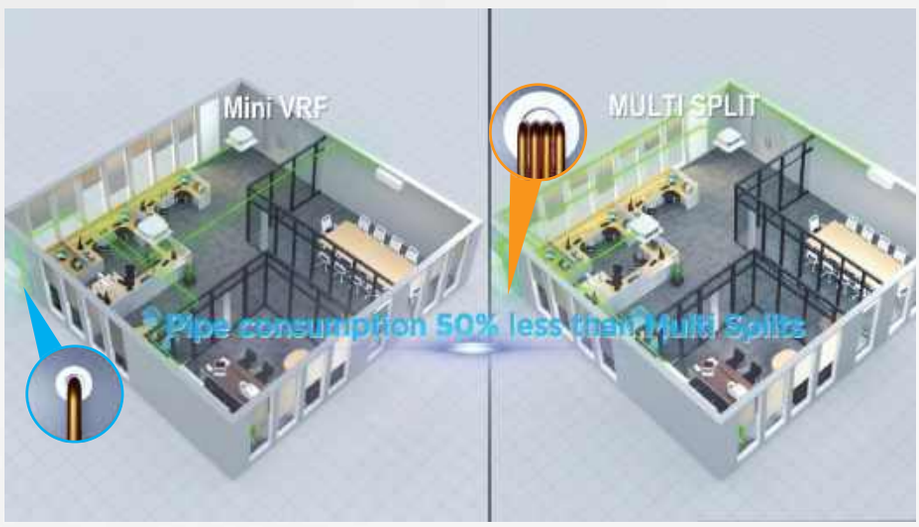

Comparing with multi split, Mini VRF has some distinctive advantages as follows:

- ◆ less pipe space requirement
- ◆ Less pipe consumption
- ◆ No special requirement for pipe holes
- ◆ keep your house neat and tidy.

Longer Piping Capability

The Mini VRF provides a total piping length possibility of 80m, a maximum height difference between outdoor and indoor units of 30m. These generous allowances facilitate an extensive array of system designs.



Full DC Inverter Technology

The Mini VRF uses full DC inverter compressor and fan motor to achieve high precision stepless speed adjustment according to system operation, and ensures that the system is always in optimum condition, operating more efficiently, more consistently and with less noise.



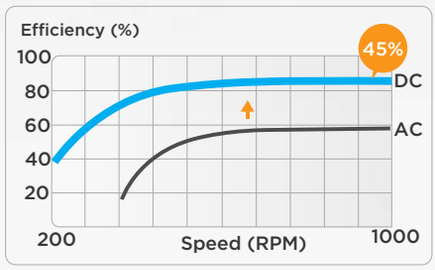

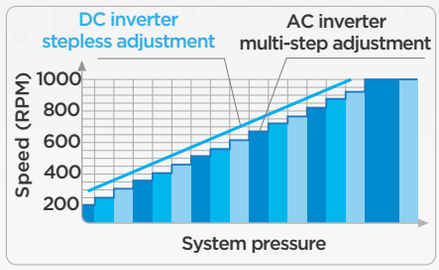



Wide Operation Range

Mini VRF can operate in a wide ambient temperature range. It can operate stably from -5°C up to 55°C in cooling mode and from -15°C to 27°C in heating mode.

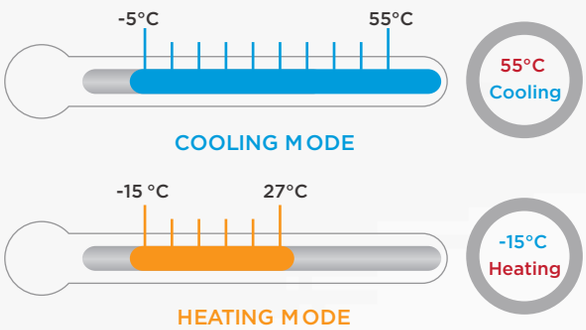

Ceiling Mounting

The Wall Mounted new heat exchanger is designed to meet the installation requirements close to the ceiling, and the minimum distance from the ceiling is 3cm.

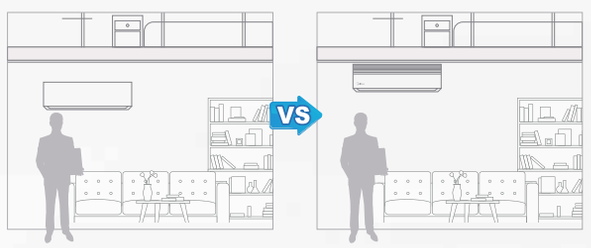

There is some distance from ceiling

The distance from the ceiling is 3cm

Air Flow

Possibility to select automatic vertical and horizontal moving of the air discharge louvre, for uniform air flow and temperature distribution.



Up & Down

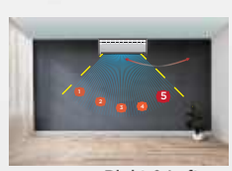

Right & Left

*Horizontal Swing function is available as a customization option for Wall Mounted.

High-lift Drain Pump

A drain pump with a 1200mm raise height is fitted as customized, simplifying installation of the drain piping.

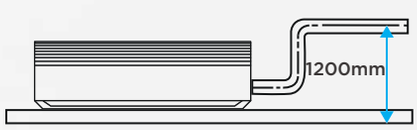

*The drain pump is available as a customization option.

Flexible Pipe Connection

The branch box allows part of the connecting pipe to be empty and not connected to the indoor unit, so the installation is more flexible.

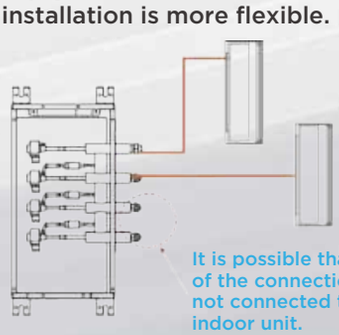

It is possible that part of the connection is not connected to the indoor unit.

WiFi Module

With the built-in Wifi module, you can remotely control the power on/off, adjust the temperature, switch modes and other functions via SmartHome APP.



*Wifi module is available as a customization option

Branch Box Installation

Incorrect installation site



Rooftop in direct sunlight



Rooftop in direct sunlight



Kitchen with heavy fumes



Flammable and explosive places

Branch Box Installation

Incorrect installation direction

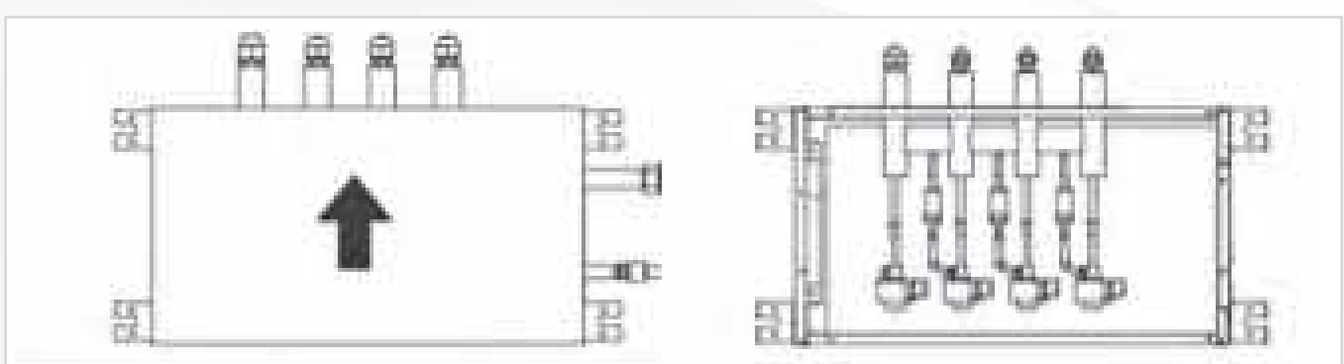

The electronic expansion valve inside the branch box must not be installed upside down (an inverted position results in valve flow regulation or valve closure issues due to gravity).

Branch Box Installation

Incorrect connection

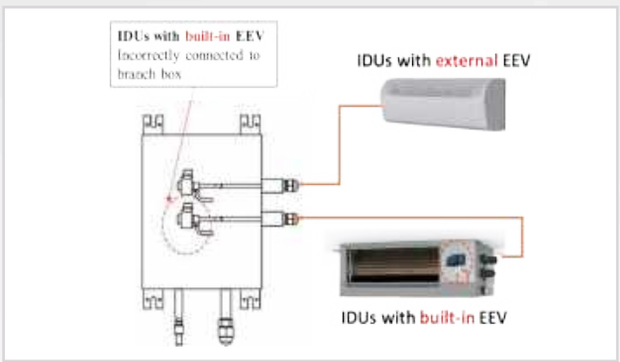

The built-in EEV indoor unit is connected to the branch box

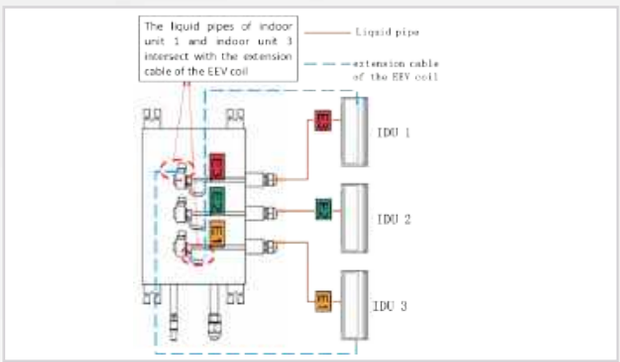

The EEV coil extension cable is staggered with the piping

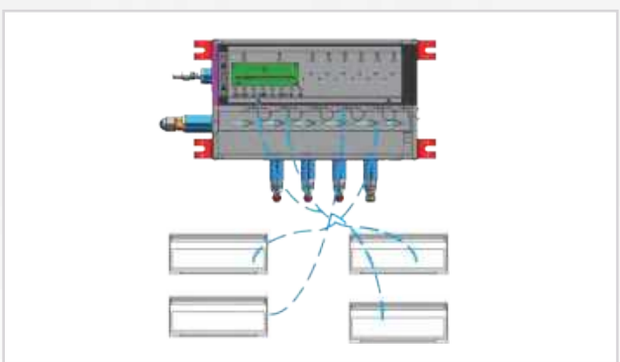

Each indoor unit communication cable is wound with the EEV coil extension cable

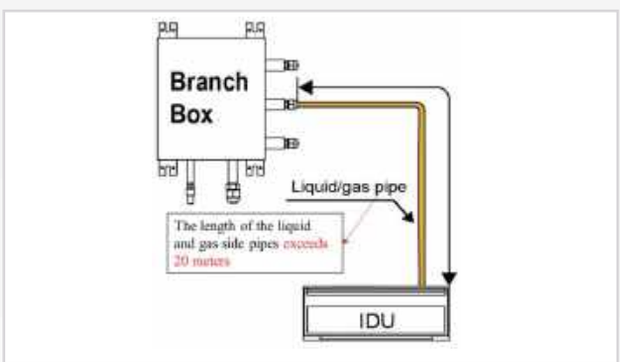

The length of the connecting pipe between the branch box and the indoor unit is > 20m

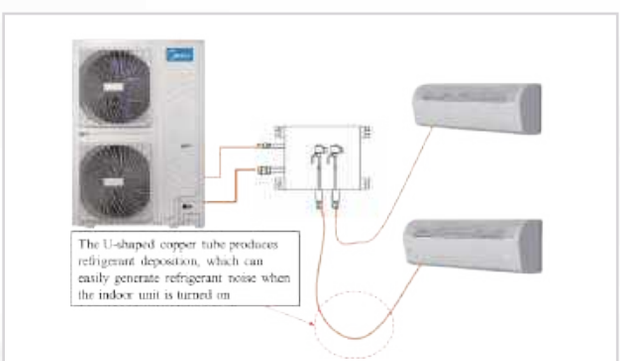

U-shaped copper piping is connected to produce refrigerant deposits

Specifications

Outdoor unit

Model			MDV-V244WN1(AU)-A
Power supply		V/N/Hz	220-240/1/50
Heating[1]	Capacity	kW	24.4
	Power input	kW	5.59
Cooling[2]	Capacity	kW	20.0
	Power input	kW	4.32
Connected indoor unit	Total capacity		50-130% of outdoor unit capacity[4]
	Maximum quantity[5]		6
Ambient temp. operation range	Cooling	°C	-5-55
	Heating	°C	-15-27
Sound pressure level (cooling/heating[3])		dB(A)	59/59
Refrigerant	Type		R410A
	Charge	Kg	4.8
pipe size	Liquid	mm	9.53
	Gas	mm	19.1
	Max. height difference	m	30(ODU up)
		m	20(ODU down)
	Max. piping length	m	80
Net dimension(W×H×D)		mm	1120 ×1558 ×528
Packing dimension(W×H×D)		mm	1270×1720×565
Net/Gross weight		kg	129/145

Notes:
1. Indoor temperature 20°C DB; outdoor temperature 7°C DB, 6°C WB; equivalent refrigerant piping length 7.5m with zero level difference.
2. Indoor temperature 27°C DB, 19°C WB; outdoor temperature 35°C DB; equivalent refrigerant piping length 7.5m with zero level difference.
3. Sound level: Anechoic chamber conversion value, measured at a point 1 m in front of the unit at a height of 1m.
   During actual operation, these values are normally somewhat higher as a result of ambient conditions.
4. If you have a need for more than 6 Wall Mounted indoor units, please contact Midea.
5. 50-130% is system combination ratio, combination ratio=Sum of capacity indexes of the indoor units/Capacity index of the outdoor units
   *The above data may be changed without notice for future improvement on quality and performance.

Indoor unit

Model			MIH34GHN18(AU)-A	MIH42GHN18(AU)-A	MIH51GHN18(AU)-A
Power supply			1phase, 220-240V,50/60Hz		
Cooling[1]	Capacity	kW	2.8	3.6	4.5
	Power input	W	24	27	30
Heating[2]	Capacity	kW	3.4	4.2	5.1
	Power input	W	24	27	30
Pipe connections	Liquid	mm	Φ6.35	Φ6.35	Φ6.35
	Gas	mm	Φ12.7	Φ12.7	Φ12.7
Net dimension (W×H×D)		mm	750×295×265	750×295×265	950×295×265
Packing dimension (W×H×D)		mm	875×385×360	875×385×360	1075×385×360
Net/Gross weight		kg	10.8/14.7	10.8/14.7	12.4/16.3

Model			MIH64GHN18(AU)-A	MIH84GHN18(AU)-A	MIH93GHN18(AU)-A
Power supply			1phase, 220-240V,50/60Hz		
Cooling[1]	Capacity	kW	5.6	7.1	8
	Power input	W	40	50	65
Heating[2]	Capacity	kW	6.4	8.4	9.3
	Power input	W	40	50	65
Pipe connections	Liquid	mm	Φ6.35	Φ9.52	Φ9.52
	Gas	mm	Φ12.7	Φ15.9	Φ15.9
Net dimension (W×H×D)		mm	950×295×265	1200×295×265	1200×295×265
Packing dimension (W×H×D)		mm	1075×385×360	1315×385×360	1315 ×385×360
Net/Gross weight		kg	12.4/16.3	16.0/20.3	16.0/20.3

Notes:
1. Indoor temperature 20°C DB; outdoor temperature 7°C DB, 6°C WB; equivalent refrigerant piping length 7.5m with zero level difference.
2. Indoor temperature 27°C DB, 19°C WB; outdoor temperature 35°C DB; equivalent refrigerant piping length 7.5m with zero level difference.
3. The dimension is only the body size, excluding the size of the installation lug, connecting copper pipe, etc.

Victorian Energy Upgrades (VEU) Program

The Victorian Energy Upgrades (VEU) program assists households and businesses to reduce their energy bills and greenhouse gas emissions by providing financial incentives to install energy efficient equipment and appliances.
Midea has a suite of high efficiency products to suit all upgrade categories which attract the highest incentives in each program. We are proudly introducing to our range the Mini VRF series, which thanks to our labs advanced technology, are more energy efficient systems that will be further reducing carbon emissions while increasing financial savings through the incentives to the Victorian community.

For more information on the program please visit following website
VIC https://www.esc.vic.gov.au/victorian-energy-upgrades/about-victorian-energy-upgrades-program

VEU Climatic Region	Heating capacity(kW)	Cooling capacity(kW)	VEECs(res)**	
			2025*	2026*
For upgrades in Metropolitan Victoria-Climatic region mild	24.4	20	105	105
For upgrades in Metropolitan Victoria-Climatic region cold	24.4	20	115	115
For upgrades in Regional Victoria-Climatic region mild	24.4	20	105	105
For upgrades in Regional Victoria-Climatic region cold	24.4	20	115	115
For upgrades in Regional Victoria-Climatic region hot	24.4	20	60	60

*All certificates have been calculated for the dates between the 1st February of that year to January 31 of the following year.
*Residential VEECS certificates have been submitted to the VEU and waiting for final approval.
**VEEC data was calculated base on activity scenatio 6 (VII)of activity 6 (23) -space heating and cooling-high efficiency air conditioner

Midea HVAC & Energy Australia

Address: 1513 Dandenong Road Oakleigh VIC 3166 Australia
Email: info@mdhome.com.au
www.mdhome.com.au
Phone: 1300 726 002
Midea HVAC & Energy Australia reserves the right to change the specifications of the product, and to withdraw or replace products without prior notification or public announcement. Midea is constantly developing and improving its products.

Quality Assurance ISO 9001
Environmental Management ISO 14001
Occupational Health and Safety Management ISO 45001