Arc Duct Type Indoor Unit

Installation and Operation Manual

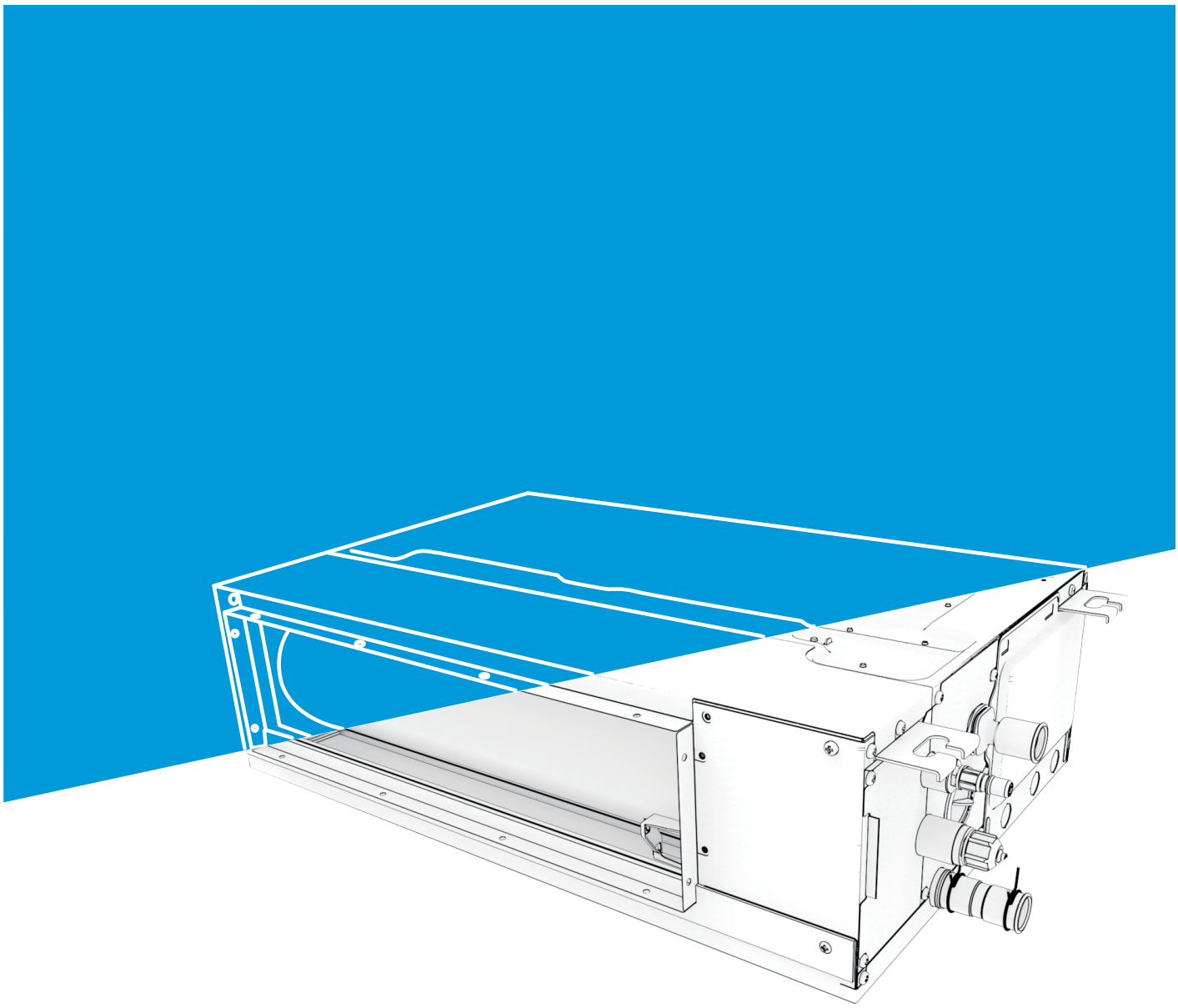

Original instructions.
Read this manual carefully before using the product, and keep it for future reference.
All the pictures in this manual are for illustration purpose only.

Contents

About The Documentation 1

About This Document / 1

Safety Instructions / 2

Safety Warning 4

Safety Precautions / 4

Electric Safety Requirements / 5

About The Refrigerant / 6

Operation 9

Operation Precautions / 9

Optimum Operation / 10

Symptoms That Are Not Faults / 12

Display Box (Optional) / 14

Disposal / 14

Installation 15

Installation Precautions / 15

Installation Materials / 21

Preparations Before Installation / 23

Indoor Unit Installation / 24

Refrigerant Connecting Piping Installation / 28

Drain Pipe Installation / 34

Air Duct Installation / 38

Electrical Connection / 40

Error Codes / 56

Settings / 61

Test Run / 67

Maintenance And Service 69

Safety Warning / 69

Cleaning / 69

Service / 72

About The Documentation

1 About This Document

NOTE

Make sure that the user has the printed documentation and ask him/her to keep it for future reference.

Target audience

Authorised installers + end users

NOTE

This appliance is intended to be used by expert or trained users in shops, in light industry, and on farms, or for commercial and household use by lay persons.

WARNING

Please thoroughly read and ensure that you fully understand the safety precautions (including the signs and symbols) in this manual, and follow relevant instructions during use to prevent damage to health or property.

Documentation set

This document is part of a documentation set. The complete set consists of:

- General safety precautions:
  - Safety instructions that you must read before installing
- Indoor unit installation and operation manual:
  - Installation and operation instructions
- Repeater installation and operation manual:
  - Installation and operation instructions
- Controller installation and operation manual:
  - Installation and operation instructions

Please refer to the product manual for other accessories.

Technical engineering data

Latest revisions of the supplied documentation may be available via your dealer.

The original documentation is written in English. All other languages are translations.

2 Safety Instructions

Please thoroughly read and ensure that you fully understand the safety precautions (including the signs and symbols) in this manual, and follow relevant instructions during use to prevent damage to health or property.

Safety Signs

⚠ **DANGER**	Indicates a hazard with a high level of risk which, if not avoided, will result in death or serious injury.
⚠ **WARNING**	Indicates a hazard with a medium level of risk which, if not avoided, could result in death or serious injury.
⚠ **CAUTION**	Indicates a hazard with a low level of risk which, if not avoided, could result in minor or moderate injury.
NOTE	Useful operation and maintenance information.

Explanation Of Symbols Displayed On The Unit

	WARNING	This symbol shows that this appliance used a flammable refrigerant. If the refrigerant is leaked and exposed to an external ignition source, there is a risk of fire.
	CAUTION	This symbol shows that the operation manual should be read carefully.
	CAUTION	This symbol shows that a service personnel should be handling this equipment with reference to the installation manual.
	CAUTION	This symbol shows that information is available such as the operating manual or installation manual.



WARNING: Risk of fire

(for IEC 60335-2-40: 2018 only)



WARNING: Risk of fire

(for IEC/EN 60335-2-40
except IEC 60335-2-40: 2018)

NOTE

The symbols above are for R32 refrigerant system.

⚠ DANGER

Any person who is involved with working on or breaking into a refrigerant circuit should hold a current valid certificate from an industry-accredited assessment authority, which authorises their competence to handle refrigerants safely in accordance with an industry recognised assessment specification.

Servicing shall only be performed as recommended by the equipment manufacturer. Maintenance and repair requiring the assistance of other skilled personnel shall be carried out under the supervision of the person competent in the use of flammable refrigerants.

These instructions are exclusively intended for qualified contractors and authorised installers

- **Work on the refrigerant circuit with flammable refrigerant in safety group A2L may only be carried out by authorised heating contractors. These heating contractors must be trained in accordance with EN 378 Part 4 or IEC 60335-2-40, Section HH. The certificate of competence from an industry accredited body.**
- **Brazing/soldering work on the refrigerant circuit may only be carried out by contractors certified in accordance with ISO 13585 and AD 2000, Datasheet HP 100R. And only by contractors qualified and certified for the processes to be carried out. The work must fall within the range of applications purchased and be carried out in accordance with the prescribed procedures. Soldering/brazing work on accumulator connections requires certification of personnel and processes by a notified body according to the Pressure Equipment Directive (2014/68/EU).**
- **Work on electrical equipment may only be carried out by a qualified electrician.**
- **Before initial commissioning, all safety relevant points must be checked by the particular certified heating contractors. The system must be commissioned by the system installer or a qualified person authorised by the installer.**

Safety Warning

⚠ WARNING CONTENTS



Ensure Proper Earthing



Professional Only

PROHIBITION SIGNS



No Laying Inflammable Thing



No Strong Currents



No Open Flame; Fire, Open Ignition Source and Smoking Prohibited



No Acid or Alkali Materials

1 Safety Precautions

⚠ DANGER

In the event of refrigerant leakage, smoking and open flames are prohibited. Disconnect the main power switch immediately, open windows to allow ventilation, keep away from the leakage point, and contact your local dealer or technical support to request a professional repair.

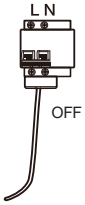

⚠ WARNING

Air conditioner installation must comply with local standards and electrical codes, and relevant instructions in this manual.

The appliance shall be stored in a well-ventilated area where the room size corresponds to the room area as specified for operation.

The appliance shall be stored in a room without continuously operating open flames (for example an operating gas appliance) and ignition sources (for example an operating electric heater).

The appliance shall be stored so as to prevent mechanical damage from occurring.

Do not use any liquid cleanser, liquefied cleanser, or corrosive cleanser to wipe this unit or spray water or other liquids on the unit. Otherwise, the plastic parts of the unit will become damaged and an electrical shock may occur. Disconnect the main power switch before cleaning and maintenance to avoid accidents.

Ask a professional to remove and reinstall the air conditioner.

Ask a professional for maintenance and repair assistance.

This air conditioner is classified as an "appliance which is not accessible to the general public".

The indoor unit shall be placed at a height not accessible to children, at least 2.5m above the ground.



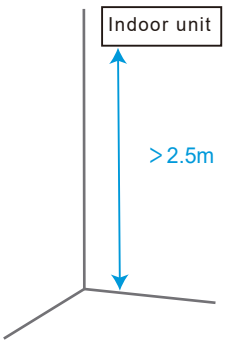

⚠ CAUTION

This appliance is not intended for use by persons (including children) with reduced physical, sensory or mental capabilities, or lack of experience and knowledge, unless they have been given supervision or instruction concerning use of the appliance by a person responsible for their safety.

Children should be supervised to ensure that they do not play with the appliance.

The units are partial unit air conditioners, complying with partial unit requirements of this International Standard, and must only be connected to other units that have been confirmed as complying to corresponding partial unit requirements of this International Standard.

2 Electric Safety Requirements

⚠ WARNING



The air conditioner shall be installed according to the local wiring specifications.

Wiring work must be completed by qualified electricians.

The air conditioner must be well earthed. Specifically, the main switch of the air conditioner must have a reliable earthing cable.

Before contacting wiring devices, cut off all the power supplies.

The user MAY NOT disassemble or repair the air conditioner. Doing so can be dangerous. In the event of a fault, immediately cut off the power and contact your local dealer or technical support.

A separate power supply that meets the rated parameter values must be provided for the air conditioner.



The fixed wiring to which the air conditioner is connected must be equipped with a power cut-off device that meets the wiring requirements.

The air conditioner's circuit board (PCB) is designed with a fuse to provide overcurrent protection.

The specifications of the fuse are printed on the circuit board.

NOTE: For the units with R32 refrigerant , only the blast-proof ceramic fuse can be used.

⚠ CAUTION



Under no circumstances should the earth wires of the power supply system be disconnected.

If the supply cord is damaged, it must be replaced by the manufacturer, its service agent or similarly qualified persons in order to avoid a hazard.

Do not use a damaged power supply cable and replace it if it is damaged.

When the air conditioner is used for the first time or is in a power-off state for a long time, it needs to be connected to the power supply and warmed up for at least 12 hours before use.

3 About The Refrigerant

⚠ WARNING

The following applies to R32 refrigerant systems.

Prior to beginning work on systems containing flammable refrigerants, safety checks are necessary to ensure that the risk of ignition is minimized.

For repair to the refrigerating system, the following precautions shall be complied with prior to conducting work on the system.

Work shall be undertaken under a controlled procedure so as to minimise the risk of a flammable gas or vapour being present while the work is being performed.

All maintenance staff and others working in the local area shall be instructed on the nature of work being carried out. Work in confined spaces shall be avoided. The area around the workspace shall be sectioned off. Ensure that the conditions within the area have been made safe by control of flammable material.

The area shall be checked with an appropriate refrigerant detector prior to and during work, to ensure the technician is aware of potentially flammable atmospheres.

Ensure that the leak detection equipment being used is suitable for use with flammable refrigerants, i.e. non-sparking, adequately sealed or intrinsically safe.

If any hot work is to be conducted on the refrigeration equipment or any associated parts, appropriate fire extinguishing equipment shall be available to hand. Have a dry powder or CO2 fire extinguisher adjacent to the charging area.

No person carrying out work in relation to a refrigeration system which involves exposing any pipe work that contains or has contained flammable refrigerant shall use any sources of ignition in such a manner that it may lead to the risk of fire or explosion.

All possible ignition sources, including cigarette smoking, should be kept sufficiently far away from the site of installation, repairing, removing and disposal, during which flammable refrigerant can possibly be released to the surrounding space.

Prior to work taking place, the area around the equipment is to be surveyed to make sure that there are no flammable hazards or ignition risks. “No Smoking” signs shall be displayed.

Ensure that the area is in the open or that it is adequately ventilated before breaking into the system or conducting any hot work. A degree of ventilation shall continue during the period that the work is carried out. The ventilation should safely disperse any released refrigerant and preferably expel it externally into the atmosphere.

Where electrical components are being changed, they shall be fit for the purpose and to the correct specification. At all times the manufacturer’s maintenance and service guidelines shall be followed. If in doubt consult the manufacturer’s technical department for assistance.

The following checks shall be applied to installations using flammable refrigerants:
– the charge size is in accordance with the room size within which the refrigerant containing parts are installed;
– the ventilation machinery and outlets are operating adequately and are not obstructed;
– if an indirect refrigerating circuit is being used, the secondary circuit shall be checked for the presence of refrigerant;
– marking to the equipment continues to be visible and legible. Markings and signs that are illegible shall be corrected;
– refrigeration pipe or components are installed in a position where they are unlikely to be exposed to any substance which may corrode refrigerant containing components, unless the components are constructed of materials which are inherently resistant to being corroded or are suitably protected against being so corroded.

Repair and maintenance to electrical components shall include initial safety checks and component inspection procedures.

If a fault exists that could compromise safety, then no electrical supply shall be connected to the circuit until it is satisfactorily dealt with. If the fault cannot be corrected immediately but it is necessary to continue operation, an adequate temporary solution shall be used. This shall be reported to the owner of the equipment so all parties are advised.

Initial safety checks shall include:
-that capacitors are discharged: this shall be done in a safe manner to avoid possibility of sparking;
-that no live electrical components and wiring are exposed while charging, recovering or purging the system;
-that there is continuity of earth bonding.

During repairs to sealed components, all electrical supplies shall be disconnected from the equipment being worked upon prior to any removal of sealed covers, etc. If it is absolutely necessary to have an electrical supply to equipment during servicing, then a permanently operating form of leak detection shall be located at the most critical point to warn of a potentially hazardous situation.

Particular attention shall be paid to the following to ensure that by working on electrical components, the casing is not altered in such a way that the level of protection is affected. This shall include damage to cables, excessive number of connections, terminals not made to original specification, damage to seals, incorrect fitting of glands, etc.

Ensure that seals or sealing materials have not degraded such that they no longer serve the purpose of preventing the ingress of flammable atmospheres.

Replacement parts shall be in accordance with the manufacturer's specifications.

Do not apply any permanent inductive or capacitance loads to the circuit without ensuring that this will not exceed the permissible voltage and current permitted for the equipment in use.

Intrinsically safe components are the only types that can be worked on while live in the presence of a flammable atmosphere. The test apparatus shall be at the correct rating.

Replace components only with parts specified by the manufacturer. Other parts may result in the ignition of refrigerant in the atmosphere from a leak.

Check that cabling will not be subject to wear, corrosion, excessive pressure, vibration, sharp edges or any other adverse environmental effects. The check shall also take into account the effects of ageing or continual vibration from sources such as compressors or fans.

When breaking into the refrigerant circuit to make repairs – or for any other purpose – conventional procedures shall be used. However, it is important that best practice is followed.

Since flammability is a consideration. The following procedure shall be adhered to:
- remove refrigerant;
- purge the circuit with inert gas;
- evacuate;
- purge again with inert gas;
- open the circuit by cutting or brazing.

The refrigerant charge shall be recovered into the correct recovery cylinders. The system shall be "flushed" with OFN to render the unit safe. This process may need to be repeated several times. Compressed air or oxygen shall not be used for this task.

Flushing shall be achieved by breaking the vacuum in the system with OFN and continuing to fill until the working pressure is achieved, then venting to atmosphere, and finally pulling down to a vacuum.

This process shall be repeated until no refrigerant is within the system. When the final OFN charge is used, the system shall be vented down to atmospheric pressure to enable work to take place.

This operation is absolutely vital if brazing operations on the pipe-work are to take place.

Ensure that the outlet for the vacuum pump is not close to any ignition sources and there is ventilation available.

Ensure that contamination of different refrigerants does not occur when using charging equipment. Hoses or lines shall be as short as possible to minimise the amount of refrigerant contained in them.

Prior to recharging the system it shall be pressure tested with OFN.

DD.12 Decommissioning:

Before carrying out this procedure, it is essential that the technician is completely familiar with the equipment and all its detail. It is recommended good practice that all refrigerants are recovered safely. Prior to the task being carried out, an oil and refrigerant sample shall be taken in case analysis is required prior to re-use of reclaimed refrigerant. It is essential that electrical power is available before the task is commenced.

a) Become familiar with the equipment and its operation.
b) Isolate system electrically.
c) Before attempting the procedure ensure that:
   - *mechanical handling equipment is available, if required, for handling refrigerant cylinders;*
   - *all personal protective equipment is available and being used correctly;*
   - *the recovery process is supervised at all times by a competent person;*
   - *recovery equipment and cylinders conform to the appropriate standards.*

d) Pump down refrigerant system, if possible.
e) If a vacuum is not possible, make a manifold so that refrigerant can be removed from various parts of the system.
f) Make sure that cylinder is situated on the scales before recovery takes place.
g) Start the recovery machine and operate in accordance with manufacturer's instructions.
h) Do not overfill cylinders. (No more than 80 % volume liquid charge).

i) Do not exceed the maximum working pressure of the cylinder, even temporarily.
j) When the cylinders have been filled correctly and the process completed, make sure that the cylinders and the equipment are removed from site promptly and all isolation valves on the equipment are closed off.
k) Recovered refrigerant shall not be charged into another refrigeration system unless it has been cleaned and checked.

Equipment shall be labelled stating that it has been de-commissioned and emptied of refrigerant. The label shall be dated and signed. Ensure that there are labels on the equipment stating the equipment contains flammable refrigerant.

When removing refrigerant from a system, either for servicing or decommissioning, it is recommended good practice that all refrigerants are removed safely.

When transferring refrigerant into cylinders, ensure that only appropriate refrigerant recovery cylinders are employed. Ensure that the correct number of cylinders for holding the total system charge are available. All cylinders to be used are designated for the recovered refrigerant and labelled for that refrigerant (i.e. special cylinders for the recovery of refrigerant). Cylinders shall be complete with pressure relief valve and associated shut-off valves in good working order. Empty recovery cylinders are evacuated and, if possible, cooled before recovery occurs.

The recovery equipment shall be in good working order with a set of instructions concerning the equipment that is at hand and shall be suitable for the recovery of flammable refrigerants. In addition, a set of calibrated weighing scales shall be available and in good working order. Hoses shall be complete with leak-free disconnect couplings and in good condition. Before using the recovery machine, check that it is in satisfactory working order, has been properly maintained and that any associated electrical components are sealed to prevent ignition in the event of a refrigerant release. Consult manufacturer if in doubt.

The recovered refrigerant shall be returned to the refrigerant supplier in the correct recovery cylinder, and the relevant Waste Transfer Note arranged. Do not mix refrigerants in recovery units and especially not in cylinders.

If compressors or compressor oils are to be removed, ensure that they have been evacuated to an acceptable level to make certain that flammable refrigerant does not remain within the lubricant. The evacuation process shall be carried out prior to returning the compressor to the suppliers. Only electric heating to the compressor body shall be employed to accelerate this process. When oil is drained from a system, it shall be carried out safely.

Warning: disconnect the appliance from its power source during service and when replacing parts.

These units are partial unit air conditioners, complying with partial unit requirements of this International Standard, and must only be connected to other units that have been confirmed as complying to corresponding partial unit requirements of this International Standard.

Operation

1 Operation Precautions

⚠ WARNING

If the unit will be not used for a long time, disconnect the main power switch. Otherwise, an accident may occur.

The installation height of the air conditioner shall be at least 2.5m above the ground to avoid the following risks:

1. Touching of moving or live parts, such as fans, motors, or louvers, by a non professional. Running parts may cause harm to you or transmission assemblies may become damaged.

2.Getting too close to the air conditioner may reduce the level of comfort.



Do not let children play with the air conditioner. Otherwise, an accident may occur.

Do not expose the indoor units or controller to moisture or water as this may cause short circuiting or fire.

Do not place any appliance that uses an open flame in the direct air supply of the air conditioner as it could interfere with the combustion of the appliance.



Do not use or store flammable gases or liquids such as natural gas, hair spray, paint or gasoline near the air conditioner. Otherwise, a fire may occur.

To avoid causing harm, do not place animals or plants directly in front of the air conditioner's air supply.

In the event of abnormal conditions such as abnormal noise, smell, smoke, temperature rise, and electric leakage, please cut off the power immediately, and then contact your local dealer or air conditioner customer service center. Do not repair the air conditioner by yourself.

Do not place flammable sprayers near the air conditioner or spray it directly at the air conditioner. Otherwise, a fire may occur.

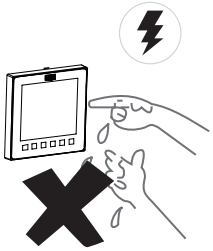

Do not place a container of water on the air conditioner. If immersed in water, the air conditioner's electrical insulation will weaken, resulting in electrical shock.

After long-term use, confirm whether the installation platform has become worn. If it is worn, the unit could fall, causing injury.

Do not operate the switch with wet hands, as this may result in electric shock.

When servicing the air conditioner, be sure to turn off the air conditioner and cut off the power supply. Otherwise, the high-speed operation of the internal fan will cause injury.

Do not use fuses like iron or copper wire other than those with the specified capacity. Otherwise, a malfunction or fire may occur. The power supply must use the special circuit of the air conditioner at the rated voltage.



Do not place valuables under the air conditioner. Air conditioner condensation problems may damage the valuables.

When the air conditioner needs to be moved and re-installed, please entrust the local dealer or a professional technician to operate it.

⚠ CAUTION



To use the unit normally, please follow the "Operation" section in this manual. Otherwise, the internal protection may be triggered, the unit may begin to drip, or the unit's cooling and heating effects may be impacted.

The room temperature should be set properly, especially when there are elderly, children, or patients in the room.

Lightning or the starting and stopping of large electrical equipment in nearby factories may cause misoperation of the air conditioner. Please turn off the main power switch for a few seconds, and then restart the air conditioner.

To avoid accidental resetting of the thermal circuit breaker, the air conditioner cannot be powered by an external switching device such as a timer or connected to a circuit that is turned on and off by a common component timer.

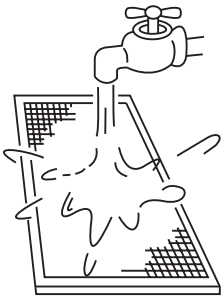

Check whether the air filter is installed properly. Confirm that the inlet and outlet ports of the indoor unit/outdoor unit are not blocked.

If the air conditioner will not be used for a long time, please clean the air filter before you start the air conditioner. Otherwise, dust and mold on the filter could contaminate the air or produce an unpleasant odor. For more details, please refer to the section "Maintenance and Service".

When using the air conditioner for the first time or replacing the filter, complete the following settings on the controller:

1. *Reset the initial static pressure on the controller or perform a trial run on the outdoor unit (performed by the installer), and set the current state as a reference state for the unit to determine the filter state. (For details, see the Application Control section)*
2. *Set the difference between the initial resistance and the final resistance of the filter. (For details, see the wired controller manual.)*

If the above operations are not performed, then the unit may not detect the state of the filter accurately.

2 Optimum Operation

As cold air sinks and hot air rises, adjust the direction of louvers respectively in cooling and heating modes to ensure good cooling and heating effects.

In Cooling Mode

To improve the cooling effect in the room, adjust the air outlet louvers horizontally.

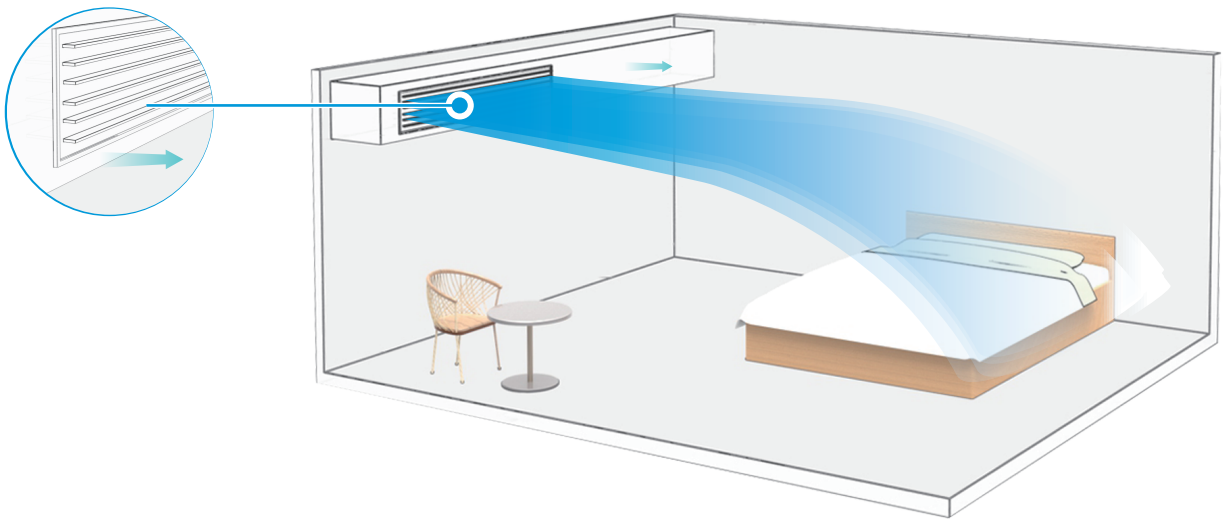

⚠ CAUTION

The downward direction of the louvers of the outlet grille during cooling operation may cause condensation on the air outlet and guide louvers surface.

In Heating Mode

To improve the heating effect in the lower parts of a room, adjust the louvers of air outlet grille downwards.

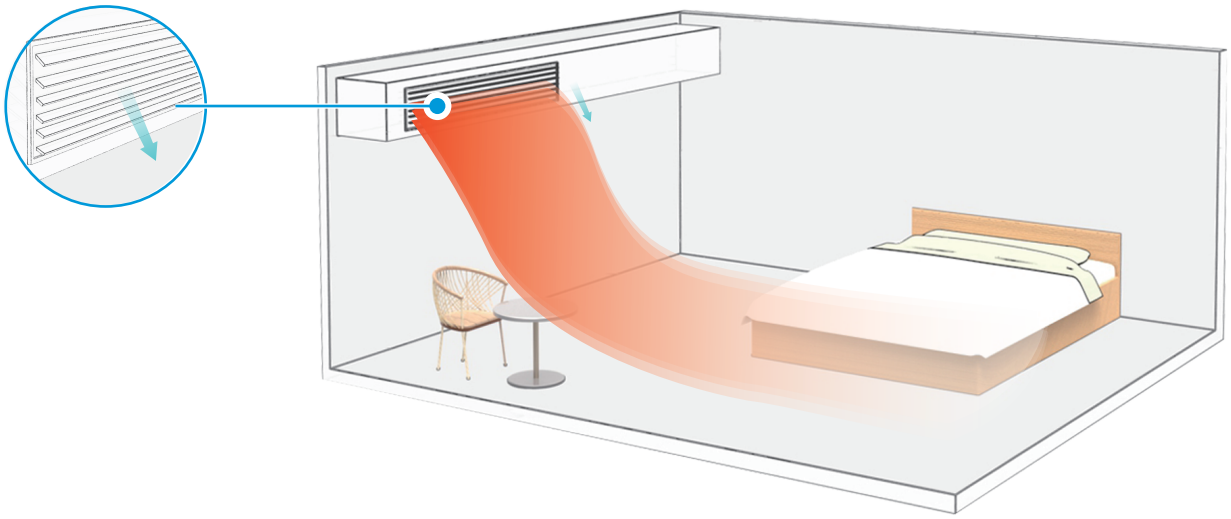

Operating Range

Use the unit in the following temperature and humidity ranges for safe and effective operation.

Cooling	Indoor temperature	16~32°C
	Indoor humidity	≤80% (When the humidity exceeds 80%, long-time operation of the indoor unit may cause dew condensation on the surface of the indoor unit, generate mist-like cold air from the air outlet or water dripping out of the unit.)
Heating	Indoor temperature	15~30°C

NOTE

If it exceeds this operating range, safety devices may be put in action and the unit may not operate.

3 Symptoms That Are Not Faults

Normal Protection Of The Air Conditioner

During operation, the following phenomena are normal and do not require maintenance.

Protection	When the power switch is on, the air conditioner starts 3-5 minutes after it is turned ON again in case it was turned off just before.
Anti-cold air protection (Heat pump type)	In heating mode (including heating in automatic mode), when the indoor heat exchanger does not reach a certain temperature, the indoor fan temporarily shuts off, or runs in Low mode until the heat exchanger heats up to prevent the blowing of cold air.
Defrosting (Heat pump type)	When the outdoor temperature is low and the humidity is high, the outdoor unit's heat exchanger may become frosted, which may reduce the heating capacity of the air conditioner. If this occurs, the air conditioner will stop heating, enter automatic defrosting mode, and return to heating mode after defrosting has been completed. During the defrosting, the outdoor fan stops running and the indoor fan runs using the anti-cold air protection function. The defrosting operation time varies depending on the outdoor temperature and the degree of frosting. It generally takes 2 to 10 minutes. During the defrosting process, the outdoor unit may emit steam due to the rapid defrosting, which is normal.

The Following Symptoms Are Not System Malfunctions

The following phenomena are normal during operation of the air conditioner. They can be solved according to the instructions below or do not need to be solved.

- ### The indoor unit emits white mist
  ① When humidity is high during cooling mode, white mist may appear due to the humidity and the temperature difference between the air inlet and outlet.
  ② When the air conditioner is switched to heating mode after defrosting, the indoor unit discharges the moisture generated from defrosting as steam.

- ### The indoor unit blows dust
  When filter is very dirty, dust may enter the indoor unit and be blown out.

- ### The indoor unit emits odor
  The indoor unit absorbs the odors of rooms, furniture or cigarettes, etc., and disperses the odors during operation. It is advised to have the air conditioner cleaned and maintained regularly by professional technicians.

- ### Water drips
  When the indoor humidity is high, condensation and water may drip out of the unit.

"Self-cleaning" sound of icing

During self-cleaning, there may be a slight clicking sound from the melting thin ice about 10 minutes.

Noise of Indoor unit

① A continuous low "hissing" sound is heard when the system is in "Auto", "Cool", "Dry", and "Heat" modes. This is the sound of refrigerant gas flowing through both indoor and outdoor units.

② A "hissing" sound is heard at the start or immediately after stopping operation or defrost operation. This is the noise of refrigerant caused by flow change.

③ A "zeen" sound is heard immediately after the power supply is turned on. The electronic expansion valve inside an indoor unit starts working and makes the noise. it will reduce in about one minute.

④ A continuous low "shah" sound is heard when the system is in cooling mode, dry mode or at a stop. When the drain pump (optional accessories) is in operation, this noise is heard.

⑤ A "pishi-pishi" squeaking sound is heard when the system stops after heating operation. Expansion and contraction of plastic parts caused by temperature change make this noise.

⑥ A low "sah", "choro-choro" sound is heard while the indoor unit is stopped. When another indoor unit is in operation, this noise is heard. In order to prevent oil and refrigerant from remaining in the system, a small amount of refrigerant is kept flowing.

Switching from cooling/heating (not available for cooling only units) mode to fan only mode

When the indoor unit reaches the set temperature, the air conditioner controller automatically stops the compressor operation and switches to the fan only mode. When the room temperature rises (in cooling mode) or falls (in heating mode) to a certain level, the compressor is restarted and cooling or heating operation is resumed.

In winter, the outdoor temperature is low, and heating effects may be decreased

① In heating mode, the air-conditioning system absorbs heat from the outdoor air and releases heat to the indoor side. When the outdoor temperature is low, less heat is released. This is the principle of heat pump.

② When the outdoor temperature is extremely low, the heating capacity of the air conditioner decreases, and other heating equipment may need to be added.

Mode conflict

All indoor units in the same refrigerant system can only operate in the same mode, such as cooling, heating or other modes. Setting to a different mode will make conflict and the system will stop. Make sure all indoor units are running in the same mode.

No heating or cooling permissions

For the same air conditioning system, if outdoor unit operates in changeover mode, the wired controller of VIP indoor unit allows users to select modes supported by the indoor units, while the wired controllers of other indoor units displays the icon of " No permission ". In this case, other indoor units can only operate in the same mode as the VIP indoor unit.

4 Display Box (Optional)

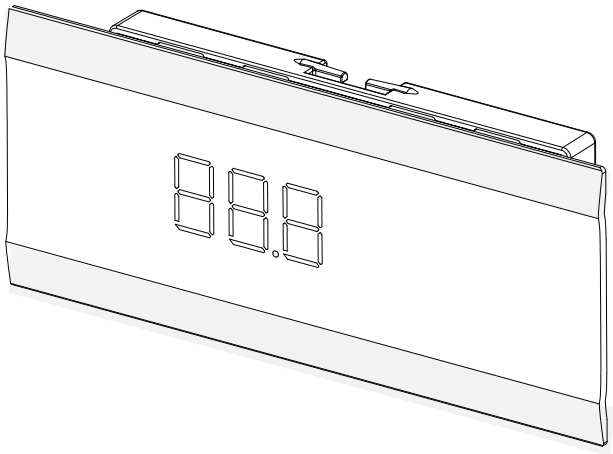

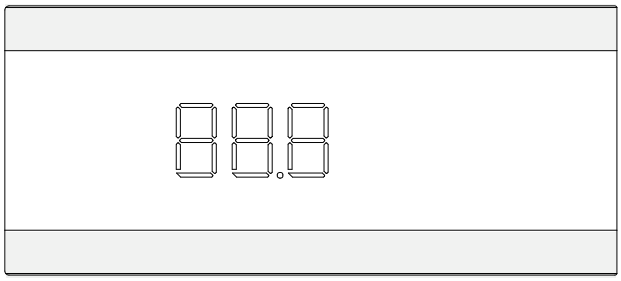

Display functions:

① In Standby mode, the main interface displays “---”.

② When starting up in Cooling or Heating mode, the main interface displays the set temperature. In Fan mode, the main interface displays the indoor temperature. In Dry mode, the main interface displays the set temperature, and when the humidity* is set, the set humidity value is displayed on the wired controller.

③ The light display on the main interface can be turned on or off through the light button on the remote controller.

④ When the system fails or runs in a special mode, the main interface displays the error code or the operating status codes. For details, see the section “Error Codes and definitions”.

NOTE

Humidity* : The humidity control functions is customized.

Some display functions are available only for certain indoor unit and outdoor unit models, wired controllers, and display boxes. For more information, please consult your local dealer or technical support.

5 Disposal

Components and accessories from the units are not part of ordinary domestic waste.

Complete units , compressors, motors etc. are only to be disposed of via qualified disposal specialists.

This unit uses hydrofluorocarbon which is only be disposed of via qualified disposal specialists.

Installation

Carefully read this manual before installing the indoor unit.

1 Installation Precautions

⚠ WARNING

Make sure to carry out the installation according to local legislation.

Ask your local dealer or professionals to install the product.
This unit must be installed by qualified persons. Users MAY NOT install the unit themselves; otherwise, faulty operations may cause the risks of fire, electrical shock, injury, or leakage, which could harm you or others or damage the air conditioner.



Never modify or repair the unit on your own.
Otherwise, a fire, electric shock, injury or water leakage may occur. Get your local dealer or a professional to do so.

Make sure that the residual current device is installed.
The residual current device must be installed. Failure to install it may result in electric shock.

When powering the unit, follow the regulations of the local electric companies.
Make sure that the unit is earthed reliably in accordance with laws. If the earthing is not completed correctly, it may cause electrical shock.

When moving, disassembling or reinstalling the air conditioner, get the assistance of your local dealer or a professional.
If installed improperly, fire, electrical shock, injury, or water leakage may occur.

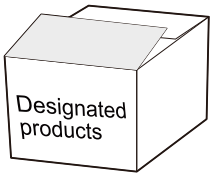

Use the optional accessories specified by local dealer.
The installation of these accessories must be carried out by professionals. Improper installation may cause fire, electrical shock, water leakage and other hazards.

Use only power supply cable and communication cables that meet specification requirements. Properly connect all the wiring to make sure that no external forces are acting on the terminal blocks, power supply cable and communication cables. Improper wiring or installation may cause a fire.

The air conditioner must be earthed. Check whether the earth line is securely connected or broken. Do not connect the earth line to gas cans, water piping, lightning rods or telephone earth lines.

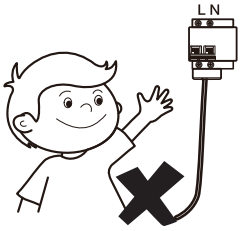

The main power switch of the air conditioner should be put in a position that is out of the reach of children.
It should not be obstructed by flammable objects such as curtains.

Open flames are prohibited when refrigerant leaks are present.
If the air conditioner is not cooling/heating properly, this may be caused by a refrigerant leak. If this occurs, contact your local dealer or a professional. The refrigerant in the air conditioner is safe, and usually does not leak.
If there is refrigerant leakage in the room, it is easy for a fire to occur after contact with the heating units of the heater/electric stove/stove. Please disconnect the power supply of the air conditioner, extinguish the flames of appliances that produce a flame, and open the windows and doors of the room to allow ventilation and ensure that the concentration of refrigerant leakage in the room does not exceed a critical level; keep away from the leakage point, and contact the dealer or professional personnel.



After the refrigerant leakage is repaired, do not start the product until the maintenance personnel confirms that the leakage is well repaired.

Before and after installation, exposing the unit to water or moisture will cause electrical short circuit.
Do not store the unit in a humid basement or expose it to rain or water.



Make sure the installation base and lifting are robust and reliable;
Insecure installation of the base may cause the air conditioner to fall, leading to an accident. Take into full consideration the effects of strong winds, typhoons and earthquakes, and reinforce the installation.

Check whether the drain pipe can drain the water smoothly.
Improper installation of the pipeline may lead to water leakage, damaging furniture, electric appliances, and the carpet.

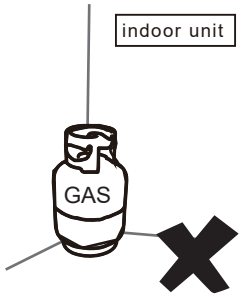

After installation, check whether the refrigerant is leaking.

Do not install the product in a location where there is a danger of flammable gas leaks.
In the event of leakage of combustible gas, the combustible gas surrounding the indoor unit may cause a fire.

Install an air filter of 30-80 mesh/inch at the return air grille to filter dust in the air and keep the air diffuser clean and free from dirt blockage.

⚠ CAUTION

Keep the indoor unit, outdoor unit, power supply cable, and connecting wires at least 1m away from the high-power radio equipment, to prevent electromagnetic interference and noise. For some electromagnetic waves, it is not enough to prevent noise even at a distance of more than 1m.

In a room equipped with fluorescent lamps (rectifier type or fast start type), the signal transmission distance of the remote controller (wireless) may not reach the predetermined value. Install the indoor unit as far away from the fluorescent lamp as possible.

Do not touch the fins of the heat exchanger, as this could cause injury.

For safety, please dispose of the packing materials properly.
Nails and other packaging materials may cause personal injury or other risks. Tear up the plastic packaging bag and dispose of it properly to prevent children from playing with it, leading to suffocation.

Do not cut off the power supply immediately after the indoor unit stops running.
Some parts of the indoor unit like the valve body and water pump are still in operation. Please wait for at least 5 minutes before cutting off the power supply. Otherwise, water leakage and other faults may occur.

If the length and direction of the air inlet/outlet panel or connecting duct have been changed, complete the following settings on the controller before use the air conditioner again: (For details, see the Application Control section)
Reset the initial static pressure on the controller or perform a trial run on the outdoor unit (performed by the installer), and set the current state as a reference state for the unit to determine the filter status.

If the above operations are not performed, then the unit may not detect the state of the filter accurately.

For evaporating units and condensing units, the instructions or markings shall include a wording to assure that the maximum operating pressure is considered when connecting to any condenser unit or evaporator unit.

For evaporating units, condensing units and condenser units, the instructions or markings shall include refrigerant charging instructions.

A warning to assure that partial units shall only be connected to an appliance suitable for the same refrigerant.

This unit is a partial unit air conditioner, complying with partial unit requirements of this International Standard, and must only be connected to other units that have been confirmed as complying to corresponding partial unit requirements of this International Standard.

The electrical interfaces shall be specified with purpose, voltage, current, and safety class of construction.

The SELV connection points, if provided, are to be clearly indicated in the instructions.

The connection point should be marked with the “read the instructions” symbol per ISO 7000-0790 (2004-01) and the Class III symbol according to IEC 60417-5180 (2003-02).

For R32 Refrigerant only.
This unit is equipped with a refrigerant leak detector for safety. To be effective, the unit must be electrically powered at all times after installation, other than when servicing.
If any supplemental unit is employed to detect leaked refrigerant, such unit shall also apply this marking or be accompanied by such instructions.

Precautions For Transporting And Lifting The Air Conditioner

① Before transporting the air conditioner, determine the path that will be used to move it to the installation site.

② Do not unpack the air conditioner until it is transported to the installation site.

③ When unpacking and moving the air conditioner, must hold the **Lifting Lugs** and do not apply force to other parts, especially the refrigerant piping, drain pipe and plastic accessories, so as to avoid damaging the air conditioner and causing personal injury.

④ Before installing the air conditioner, make sure that the refrigerant specified on the nameplate is being used.

Forbidden Installation Sites

⚠ WARNING

Do not install or use the air conditioner in the following places:



- A place filled with mineral oil, fumes or mist, like a kitchen.
  Plastic parts will age and the heat exchanger will become dirty, eventually causing the air conditioner performance to deteriorate or leak water.
  Connecting pipes and copper welds will be corroded, resulting in refrigerant leakage.
- A place where there are corrosive gases, such as acid or alkaline gases.
  Connecting pipes and copper welds will be corroded, resulting in refrigerant leakage.
- A place exposed to combustible gases and using volatile combustible gases such as diluent or gasoline.
  The electronics in the air conditioner may cause the surrounding gas to ignite.

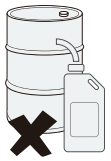

- A place where there is equipment emitting electromagnetic radiation.
  The control system will fail and the air conditioner will not function properly.
- A place where there is a high salt content in the air like a coastal area.
- Do not use the air conditioner in an environment where an explosion may occur.



- The unit cannot be installed on moving vehicles such as truck and ship.
- Factories with major voltage fluctuations in the power supplies.
- Other special environmental conditions.

⚠ CAUTION

Air conditioner units of this series are designed to provide comfort. Don't install the unit in mechanical rooms and rooms with precision instruments, food, plants, animals, or artwork.

Avoid installation in an environment with a lot of organic compounds such as ink and siloxane.

The total refrigerant charge in the system cannot exceed the requirements for minimum room size of the smallest one that is served.

NOTE

Wooden buildings, newly renovated houses, and frequent use of disinfectants may contain acidic components in the air, such as formic acid , acetic acid, and hypochlorous acid, which can corrode copper pipes and solder joints, leading to refrigerant leaks.

Factories, chemical plants, livestock farms, vegetable markets, sewage pits, and other environment may contain sulfides, acid gases such as sulfur dioxide, ammonia, and chlorides in the air, which can corrode copper pipes and solder joints, leading to refrigerant leaks.

Please contact a dealer for assistance.

Recommended Installation Sites

It is recommended to install the air conditioner according to the design drawing of the HVAC engineer. The selection principle for the installation site is as follows:

- ☑ Ensure that the airflow in and out of the indoor unit is reasonably organized to form an air circulation in the room.
- ☑ Prevent the air conditioner from blowing directly at the human body.
- ☑ Keep the air-conditioning return air away from direct exposure to the sun in the room.
- ☑ The indoor unit should not be lifted in the places like load-bearing beams and columns that affect the structural safety of the house.
- ☑ The wired controller and the indoor unit should be in the same installation space, otherwise, the sampling point setting of the wired controller needs to be changed.

Choose a site that fully complies with the following conditions and user requirements to install the air conditioning unit:

- ☑ There is enough space for installation and maintenance.
- ☑ The ceiling is level, and the structure is strong enough to support the indoor unit. If necessary, take measures to reinforce the unit's stability.
- ☑ Airflow in/out of the unit is not obstructed.
- ☑ It is easy to supply airflow to every corner of the room.
- ☑ It is easy to drain for water drain piping.
- ☑ There is no direct heat radiation.
- ☑ Avoid installation in narrow spaces or where there are more stringent noise requirements.
- ☑ Install the indoor unit at a place 2.5m above ground.
- ☑ The length of the piping between the indoor and outdoor units is within the permitted range. Refer to the Installation and Operation Manual attached with the outdoor unit.

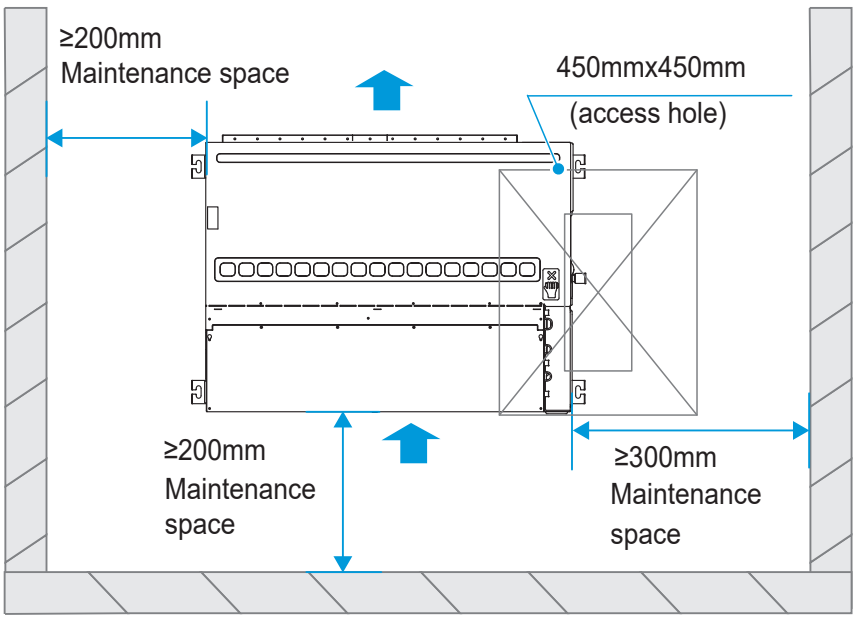

NOTE

In case of conditions in the ceiling exceed 30℃ and relative humidity of 80%, or when fresh air is inducted into the ceiling, the additional insulation is requried(minimum 10 mm thickness polyethylene foam).

Part Description

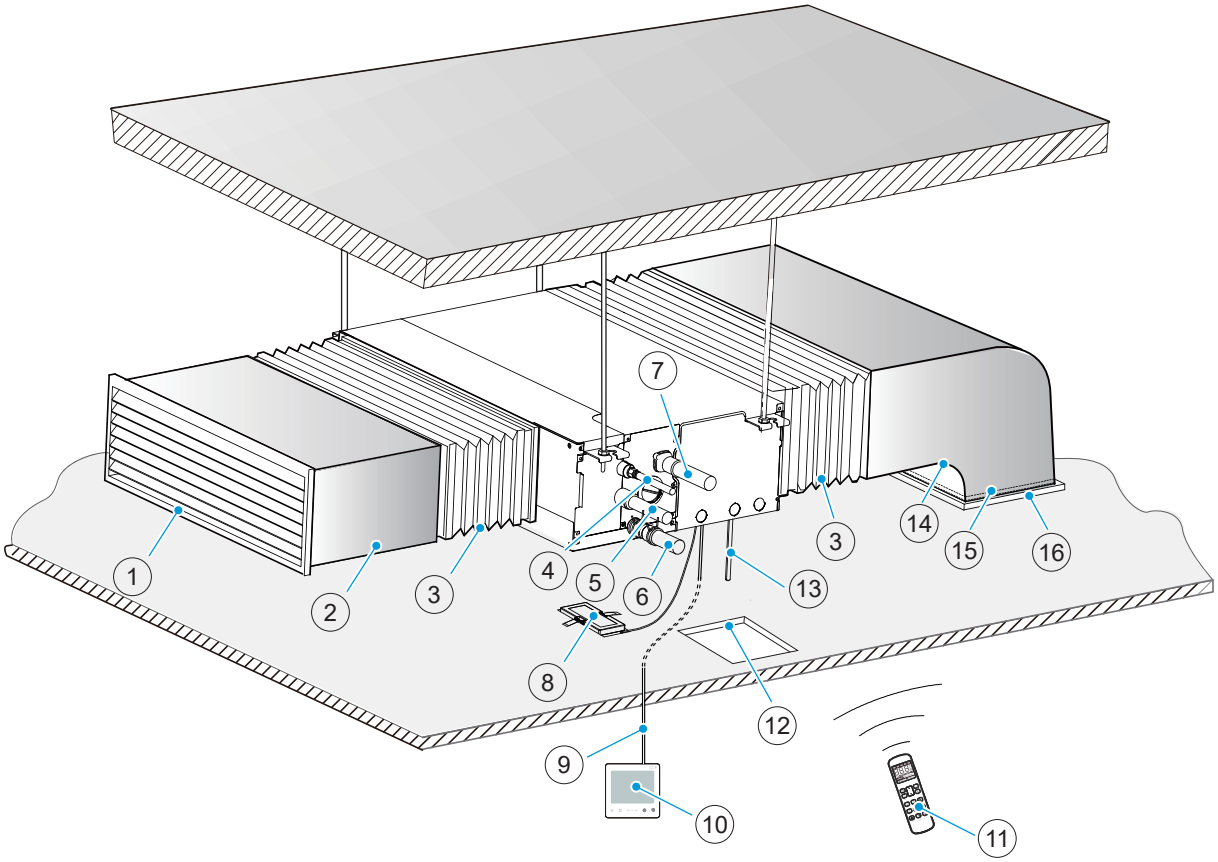

① *Air outlet grille	② *Air outlet duct	③ *Soft flexible duct
④ Gas pipe	⑤ Liquid pipe	⑥ Drain pipes for models without a water pump
⑦ Drain pipes for models with a water pump	⑧ Display box (optional)	⑨ *Connection wires
⑩ Wired controller (optional)	⑪ Remote controller (optional)	⑫ Access hole
⑬ *Power supply cable and earth wires	⑭ *Air inlet duct	⑮ Air filter
⑯ *Air inlet grille		

* To be purchased separately on site.

NOTE

All the optional accessories should be from local dealer.

For optional accessories such as wired controllers, please refer to the manuals of these accessories.

All the figures in the manual explain only the general appearance and functions of the product. The appearance and functions of the purchased product may not be completely consistent with those listed in the figures. Please refer to the actual product.

Product Dimensions

(Unit: mm)

External dimension, air outlet size, and size of fresh air outlet:

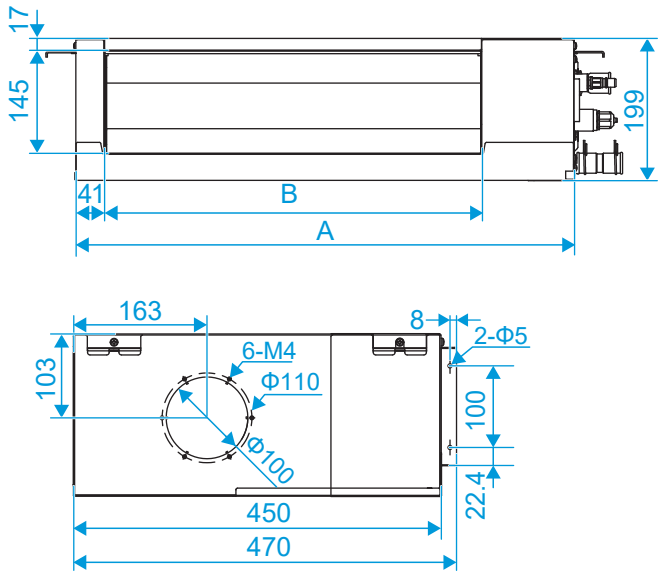

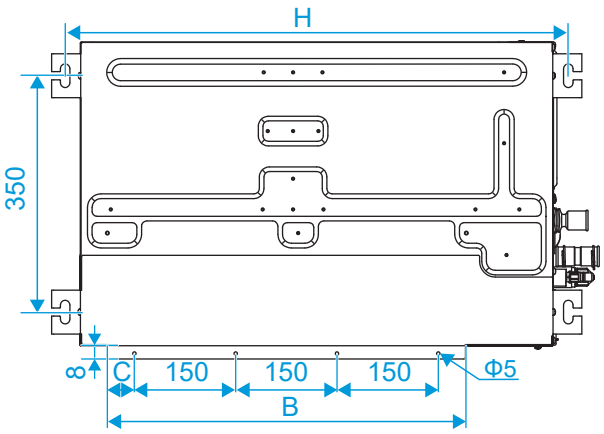

Size of return air inlet (back return air mode):

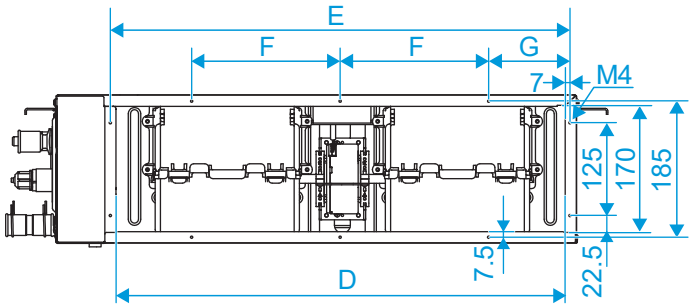

Size of return air inlet (bottom return air mode), and the distance between the lugs:

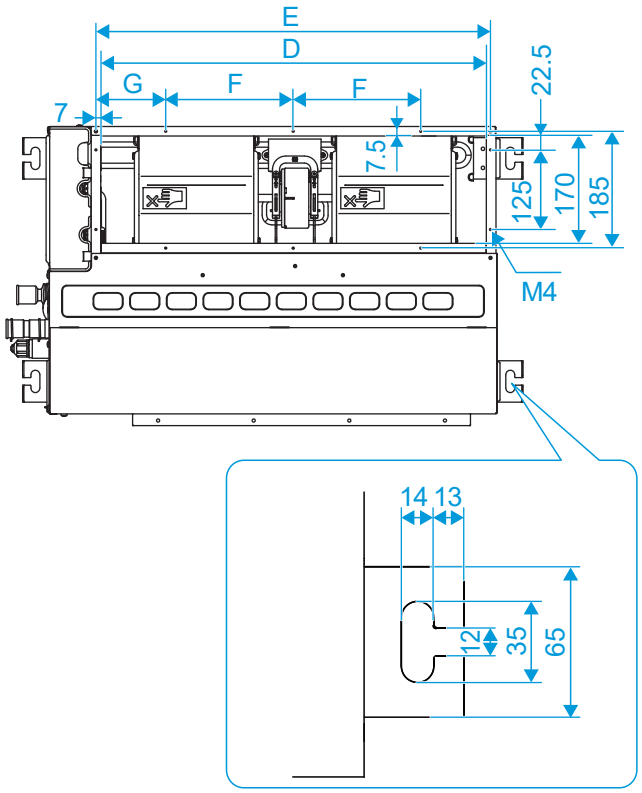

Dimension of pipe and water pipe:

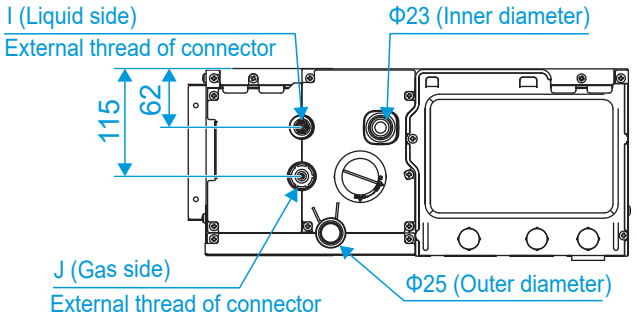

Capacity (kW)	A	B	C	D	E	F	G	H	I	J
kW≤2.8	550	380	40	455	469	250	109.5	595	7/16-20 UNF	3/4-16 UNF
2.8<kW≤3.6	700	530	40	605	619	200	109.5	745		
3.6<kW≤5.6	900	730	65	805	819	200	109.5	945		
5.6<kW≤7.1	1100	930	15	1005	1019	200	109.5	1145	5/8-18 UNF	7/8-14 UNF
7.1<kW≤11.2	1600	1400	25	1505	1519	200	159.5	1645		

2 Installation Materials

Accessories

List of accessories				
Installation And Operation Manual X 1 (Make sure to hand it over to the user)	Drain Pipe X 1 Unavailable for units with a drain pump	Insulation Piping X 2 For insulation of piping connections	Flare Nut X 2 For use in the installation of connecting pipe	Cable Tie X 4 To tighten the drain hose tightly to the drainage outlet and PVC piping of the indoor unit.

NOTE

When installing the insulation pipe on site, please cut it according to the actual needs. (Either method (a) or (b) is OK. Method (c) is incorrect. There must be no gap between the insulation pipe and connecting pipe.)

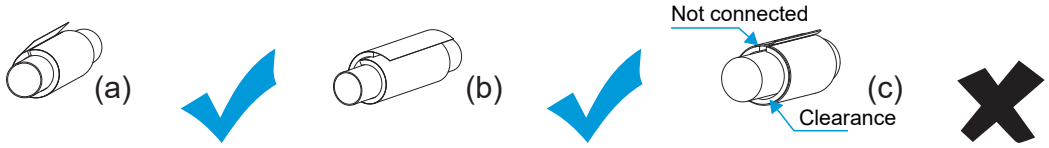

Check the accessory kit for the above items and contact your local dealer for any missing items.

Do not throw away any accessories that may be required for installation until the installation is complete.

Customers are free to choose to buy wired controllers, display boxes, remote controllers (with a seven-speed wind controller) and other optional accessories.

Air filters are divided into primary efficiency filters and medium efficiency filters.

Primary efficiency filter

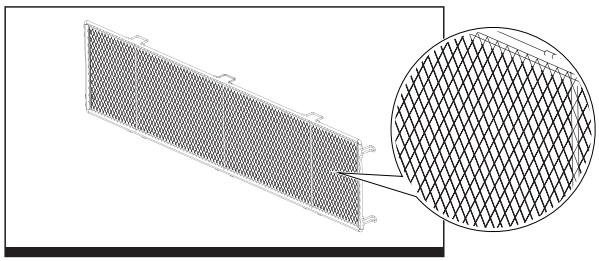

Medium efficiency filter

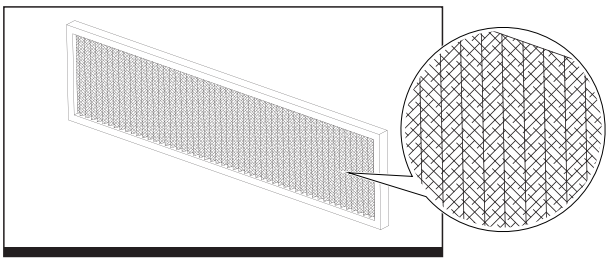

Locally Purchased Accessories

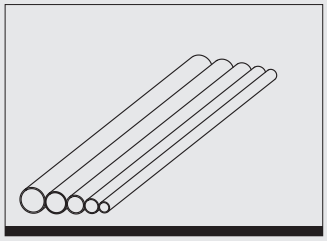

Connecting pipe (Unit: mm)		
Capacity(kW) \ Piping	Liquid side	Gas side
kW≤5.6	Φ6.35×0.75	Φ12.7×0.75
5.6＜kW≤11.2	Φ9.52×0.75	Φ15.9×1.0
Remarks	For connection of the indoor unit refrigerant system, it is recommended to use a soft connecting pipe (T2M), with the length selected according to the actual situation.	

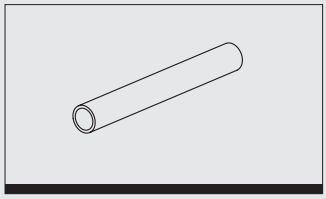	**PVC water drain pipe** This is used as the indoor unit's drain pipe, 25mm in diameter. The length is determined according to actual needs.	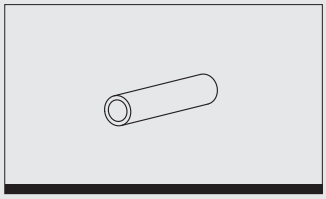	**Thermal insulation pipe** The thickness of the insulation pipe for the connecting pipe is usually 15mm or above; and the thickness of the insulation pipe for the rigid polyethylene plastic tube is usually 10mm or above. If the pipe is used in a closed humid area, the thickness should be increased.

NOTE

The materials necessary for onsite installation of the connecting pipe, air duct, flexible hose connecting the air outlet, drain pipe, lifting screw, air supply and return grille, various fasteners (pipeline bracket, Victaulic connector, screw, etc.), power supply cable, signal line, etc. need to be purchased by the installer. The materials and specifications must comply with the corresponding local or industrial standards.

Insulation Material Requirements

Connecting pipe insulation	The insulation work should only be carriedout after the successful completion of the air tight test. Use polyethylene foam as insulationmaterial, fire rating class is B1 and heat resistance is over 120°C. Thickness of the insulation pipe: 1. When the pipe diameter is equal to orgreater than 15.9mm, the insulation thickness is at least 20mm. 2. When the pipe diameter is equal to orsmaller than 12.7mm, the insulation thickness is at least 15mm. In cold climates, for heating application,the insulation thickness of outdoor refrigerant pipe is at least 40mm, theinsulation thickness of indoor refrigerant pipe is at least 20mm. Use glue to seal the jointed areas of thermalinsulation pipes, and then wrap them with electrical tape with a width of notless than 50mm to ensure the connection is sealed. Make sure the insulation between therefrigerant pipes and the Indoor unit are entire to prevent the condensation.
Air duct insulation	The insulation of the air duct shall becarried out after the air leakage test of the air duct system has passed. Use glass wool or polyethylene formmaterials for thermal insulation. Make sure the insulation of air duct isentire to prevent the condensation. Wrap the outlet-side flange and the ductconnection area with aluminum tape or something similar to prevent airescaping. The supports, suspension brackets, andbrackets of the air duct shall be arranged outside the insulation layer with protectivepad. Insulation thickness of glass wool: 1. The insulation thickness of air ductshall not be less than 40mm in rooms without air conditioning. 2. The insulation thickness of air ductshall not be less than 25mm in rooms with air conditioning. 3. If the insulation layer is made of othermaterials, the thickness of the insulation shall be obtained according todesign requirements or calculations.
Drain pipe insulation	After the drainage test shows that thereare no leaks, carry out the insulation of the drain piping. Drain pipe connection hole shall beinsulated to prevent condensation. Drain piping passing indoors shall beinsulated to prevent condensation, and insulation sleeves should be thickerthan 10mm. Use glue to seal the jointed areas ofthermal insulation pipes. The head of the metal clamp should be atthe top, and metal clamp should be well insulated.

NOTE

The materials and specifications of insulation materials must meet national or industry standards.

3 Preparations Before Installation

Unpacking Check

① After unpacking, check whether the packing materials are in good condition, whether the accessories that come with the product are complete, whether the air conditioner is intact, whether the surfaces of the heat exchanger and other parts are not worn, and whether there are oil stains on the stop valves of the unit.

② Check the two sealing nuts of the refrigerant pipe, and observe whether the red dot on the surface of the sealing nut of the gas pipe bulges. If it bulges, the refrigerant system is well sealed; if it retracts, it is leaking, and need to contact local dealer.

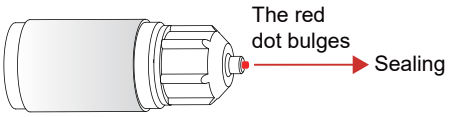

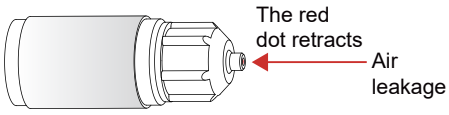

③ Check the model before installation.

④ After indoor unit and outdoor unit inspection, pack them with plastic bags to avoid intake of foreign matters.

Indoor Unit Positioning

Determine the positions of the air conditioning unit and suspension bolts.

① Determine the air outlet/return mode and the suspension position of the indoor unit according to the design drawing.

② Draw lines to locate the drilling positions of the bolts according to the three-dimensional drawing of the unit.

③ Make an access hole at the electric control box side (recommended size: 450×450mm).

④ For ease of disassembly of the motor, the rear end of the indoor unit shall be at least 200mm away from the wall.

⑤ There shall be no obstacle within 200mm of the return air inlet.

⑥ It is suggested to use an infrared ray locator for line drawing.

(Unit: mm)

Top view

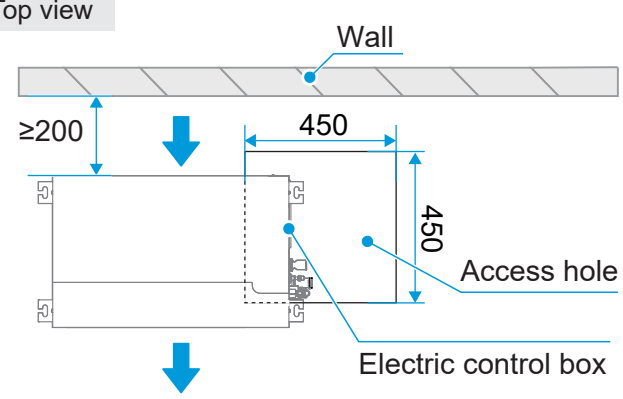

Side view

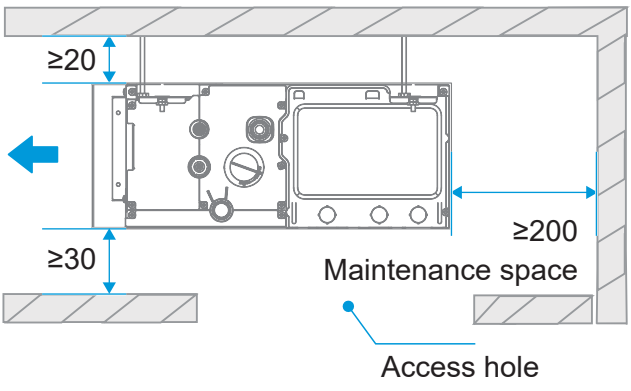

Site Adjustment Of Air Return

There are two air return modes for this series of models.

① Bottom air return for capacity kW≤7.1;

② Back return air for capacity 8.0＜kW≤11.2. The two modes can be customized or adjusted on-site. Refer to the following two figures for the adjustment method.

Remove the back cover plate assembly

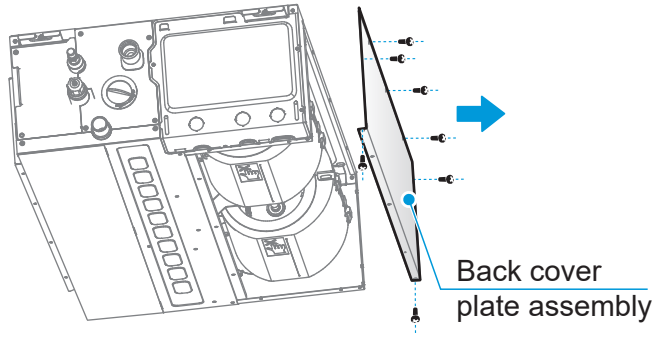

Install back cover plate assembly

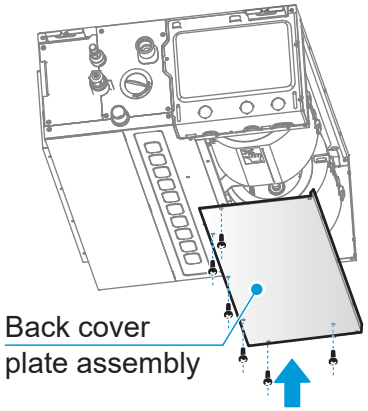

4 Indoor Unit Installation

⚠ WARNING

Install the air conditioner in a location with sufficient strength to support the weight of the unit. Take reinforcement measures when necessary.

Ensure that appliance is mounted securely.

The unit may fall and cause personal injury if the location is not strong enough.

Unstable installation may cause the unit to fall and cause an accident.

Before wiring/piping layout, make sure that the installation area (walls and floor) is safe and free of water, power, gas, and other hidden dangers.

Installation Of Suspension Bolts

① Using a pencil, mark the positions on the ceiling where the suspension bolts need to be fixed based on the distance between the four hanging holes on the indoor unit. After drilling the holes, install 4 anchors bolts and fasten them, using turnbuckle nuts connecting or welding 4 suspension bolts (φ10mm) with fully threaded bolt that is 490mm long to the 4 anchors bolts, and attach three nuts to the each suspension bolt, divide the nuts into two groups, with one nut on top as one group and two nuts at the bottom as another group, then install the indoor unit through the four lugs and nuts.

② The diameter of the suspension bolt shall not be less than 10mm.

③ When the length of the hanger rod exceeds 1.5 meters, it is necessary to add two diagonal support rods to enhance stability.

④ Because the ceilings and other architectural structures vary, it is necessary to discuss building details with the owner.

a. Ceiling treatment: Reinforce the ceiling joist to make sure that the ceiling is level and to prevent ceiling vibrations.

b. Cut off and dismantle the ceiling joist .

c. Reinforce the remaining surface after the ceiling is removed. Add further reinforcements to the joist on two ends of the ceiling.

d. Once the main unit has been lifted and mounted, carry out the piping and wiring tasks within the ceiling. Determine the outlet direction of the piping after the installation site has been finalized.

For sites where the ceiling is already available, first connect and put in position the refrigerant piping, water drain pipe, and connecting wires of the indoor unit and wired controller before hoist and mount the unit.

⚠ CAUTION

High-quality carbon steel bolts (galvanized or with other anti-rust paint applied) or stainless steel bolts are used.

How the ceiling is treated will differ with the type of building. For specific measures, please consult the building and renovation engineers.

How the suspension bolt is secured varies according to the specific situation, and it must be secure and reliable.

Refer to the following figure on installation using the suspension bolts.

Sites with concrete slabs

Use embedded bolts and anchor bolts



With steel frame

Directly set and use an angle iron for support.

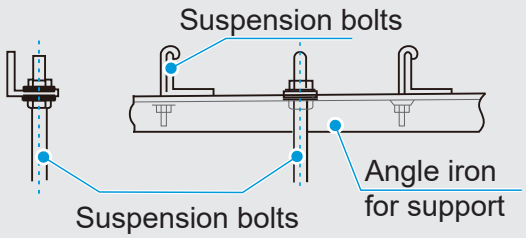

Indoor Unit Installation

⚠ CAUTION

The indoor unit must not be too close to the ceiling. It shall be installed level or at an angle within 1° towards the drainage side. (For units without a drain pump, ensure a slope of 1/100 towards the drainage side. Do not tilt towards the non-drainage side.) Otherwise, water cannot drain smoothly and leaks can easily occur.

Keep the indoor unit free from dust or foreign particles. Use the plastic bags provided with the product to cover the unit.

① Adjust the positions of the nuts. The size of the gap between the washer (bottom) and the ceiling should be based on the actual environment where the unit is being installed. The distance h between the lifting lug and the bottom of the suspension bolt shall be kept within the range of 40mm-80mm, so as to facilitate the pipe connection and assembly and disassembly of the electrical box cover.

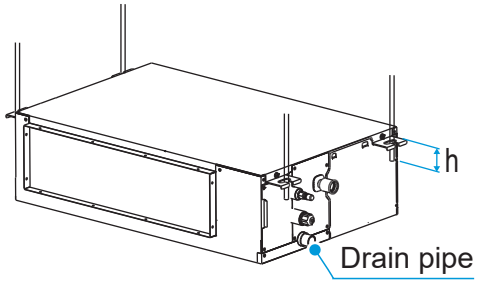

② Slot the suspension bolts in the oblong holes of the lifting lugs. Secure the top and bottom of lugs with washers and nuts.

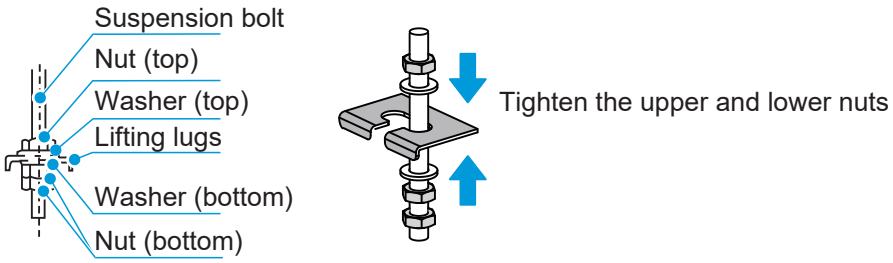

③ Keep the unit level. Use a transparent hose to observe the water level (principle of communicating vessels) and verify the levelness of the unit in the depth direction.

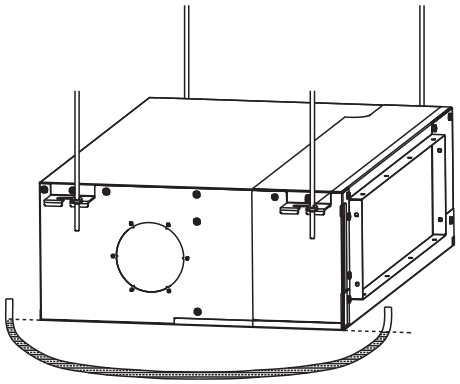

④ Use a transparent hose to observe water level (principle of communicating vessels) and verify the tilt angle of the unit in the length direction. It shall be installed level or at an angle within 1° towards the drainage side. (For units without a drain pump, ensure a slope of 1/100 towards the drainage side. Do not tilt towards the non-drainage side.) Otherwise, water cannot drain smoothly and leaks can easily occur.

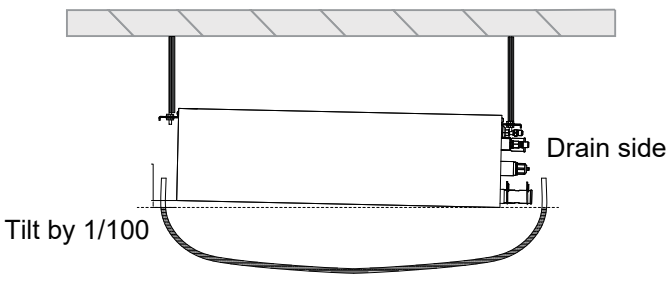

⑤ For units with fresh air functions, before installing indoor units, use diagonal pliers to remove the knockout at the fresh air unit at one side of the unit in advance. Install fresh air flanges at the fresh air unit and secure it with the flange connecting screws.

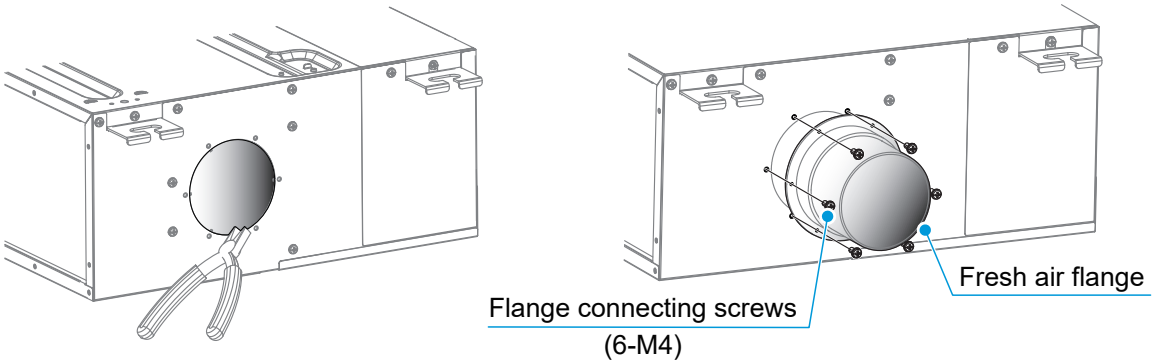

⚠ WARNING

When connecting the fresh air unit, insulate the fresh air pipe with polyethylene foam insulation materials that are at least 10mm thick.

The temperature difference between the fresh air provided by the fresh air unit to the indoor unit and the indoor temperature shall not exceed 5℃, otherwise there is a risk of condensation in the return air area of the air conditioner. Please use a fresh air unit equipped with a temperature regulation function. Or cover the enclosure of the fresh air outlet of the air conditioner with polyethylene foam insulation material with a thickness of at least 10mm. The area and thickness of the insulation material should be adjusted depending on the actual situation.

Air Inlet Grille

NOTE

When designing the air inlet panel of the air return plenum, pay attention to the distance between the vanes of the air inlet grille and try to keep the vanes in parallel with the air inlet direction.

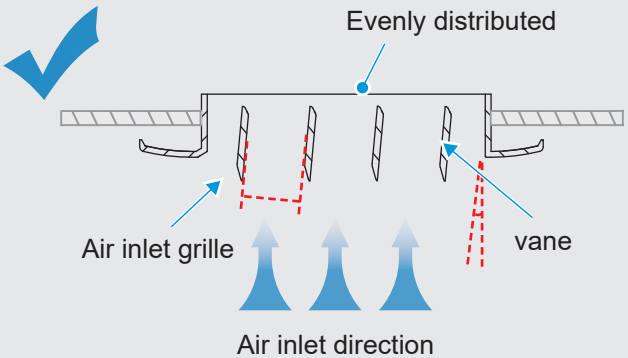

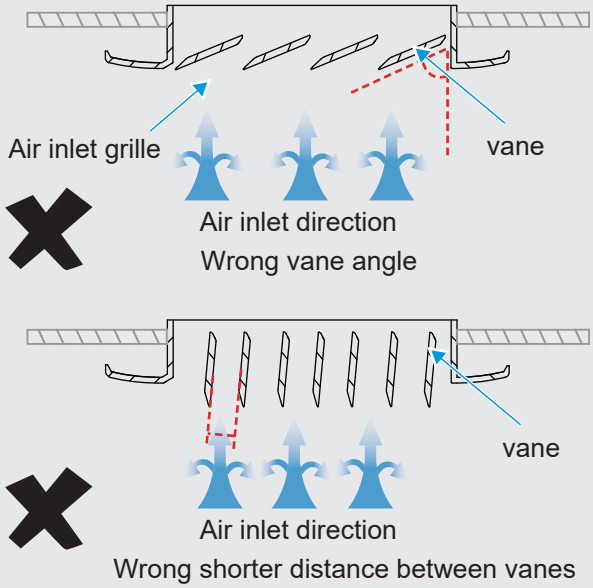

If the air outlet panel is far away from the unit and needs to be connected to the outlet air flange through a metal air duct, make sure to attach polyethylene foam to the metal contact surface to guarantee insulation.

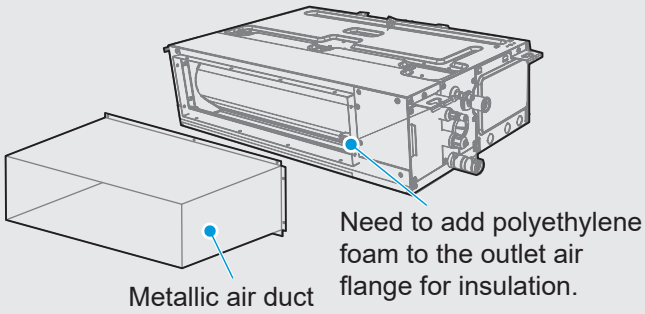

5 Refrigerant Connecting Piping Installation

When connect different series of outdoor units, the length and level differences of piping connections. Refer to the Installation and Operation Manual of the outdoor unit.

⚠ CAUTION

The installation of pipe-work shall be kept to a minimum.

During the installation of the connecting pipes, do not allow air, dust, and other debris to penetrate the piping system, and make sure the interior of the pipes is dry.

Install the connecting pipes only when the indoor units and outdoor units are mounted.

When installing the connecting pipes, record the actual installation length of the liquid pipe so that additional refrigerant can be added.

The connecting pipes must be wrapped with thermal insulation materials when they are installed.

In the event of refrigerant gas leakage during operation, please ventilate immediately.

Pipe Layout

① The deformed pipe area must not exceed 15% .

② A protective sleeve should be installed at the wall or floor hole.

③ The weld joint must not be inside the insulation.

④ The drill hole on the external wall must be sealed.

Pipe bending

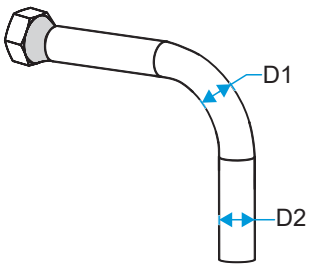

$\frac{D1}{D2} \geq 85\%$

Pipe insulation

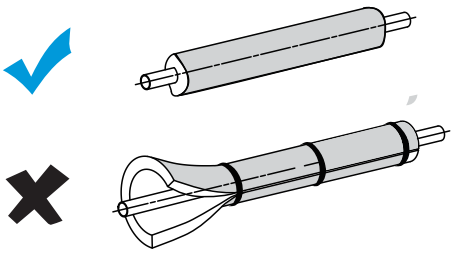

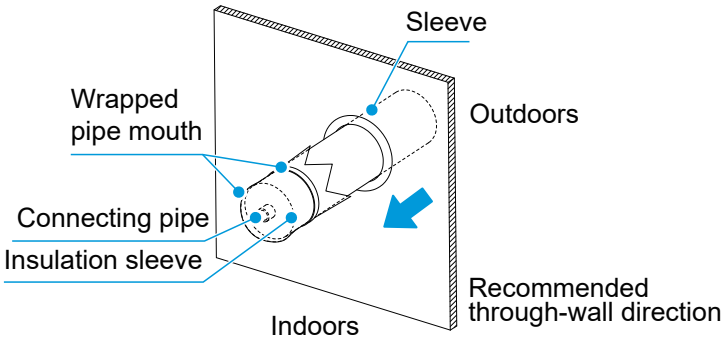

Pipe Connection Steps

CAUTION

Bend and arrange pipes carefully without damaging the pipes and their insulating layers.

Do not let the interface of the indoor unit bear the weight of the connecting pipe; otherwise, the connecting pipe may be crushed and deformed, which will affect the cooling (heating) effect, or the thermal insulation materials may be compressed, resulting in air leakage and condensation.

The connecting pipes to the outdoor units. Please refer the Installation and Operation Manual of the outdoor units.

Pipe Connection

Processing method

Mechanical bending processing: Wider application (ф6.35mm– ф28mm), using spring pipe bender, manual pipe bender or electric pipe bender.

CAUTION

The bending angle should not exceed 90°; otherwise, wrinkles will be formed in the pipe, which can easily break.

The bending radius should not be smaller than 3.5D (pipe diameter) and should be as large as possible to prevent the pipe from becoming flattened or crushed.

When mechanically bending the pipe, the pipe bender inserted into the connecting pipe must be cleaned.

1 Brazing pipes

When brazing pipes, fill the pipes with nitrogen.

CAUTION

When it is necessary to fill the piping with nitrogen during brazing, the pressure must be kept at 0.02MPa using a pressure relief valve.

Do not use flux when brazing the piping. Use a phosphor copper that does not require flux.

Do not use any antioxidants when brazing the piping. The piping may become clogged with residual antioxidants, which may block components such as electronic expansion valves during operation.

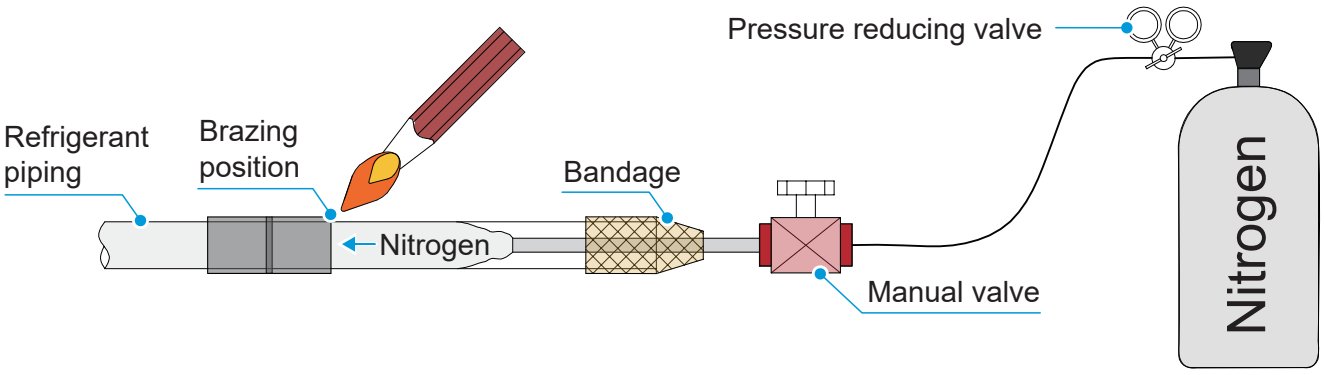

2 Flaring

To cut the piping with a pipe cutter, rotate the pipe cutter repeatedly.

Put the pipe into the connecting nut flaring, and both the gas pipe and liquid pipe of the indoor unit are connected by flaring.

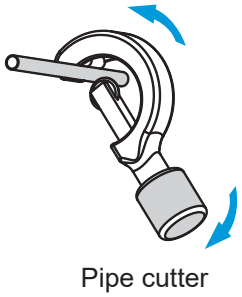

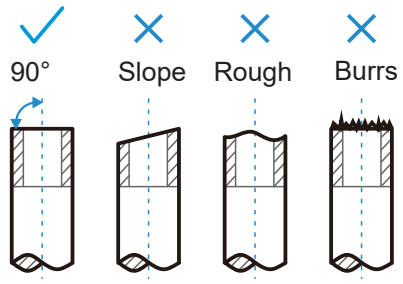

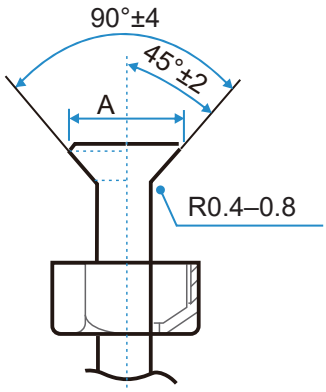

Outer diameter (mm)	A (mm)	
	Max.	Min.
Φ6.35	8.7	8.3
Φ9.52	12.4	12.0
Φ12.7	15.8	15.4
Φ15.9	19.1	18.6
Φ19.1	23.3	22.9

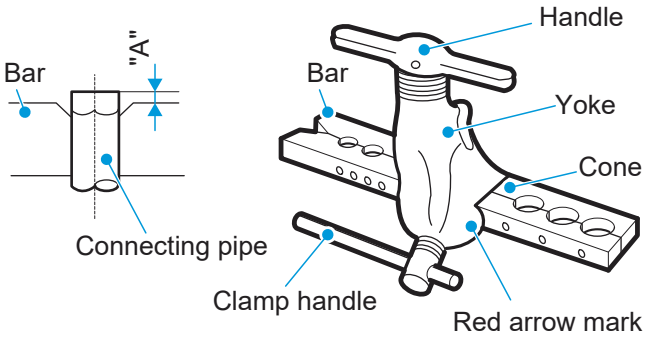

3 Nut fastening

① Connect the indoor unit first, then connect the outdoor unit. Before tightening the flare nut, apply refrigeration oil on the inner and outer surface of the pipe flare (must use refrigeration oil compatible with the refrigerant for this model), and turn it 3 or 4 turns by hand to tighten it. When connecting or removing a pipe, use two wrenches at the same time.

② Align the connecting piping, firstly tighten most of the thread of the connecting nut by hand, and then use a torque wrench to tighten the last 1-2 turns of the thread as shown in the figure.

③ The brazing is done on site, and the bell mouth cannot be used indoors.(For IEC/EN 60335-2-40 except IEC 60335-2-40: 2018)

④ The protective nut is a one-time part, it can not be reused. In case it is removed, it should be replaced with a new one.(For IEC 60335-2-40: 2018 only)

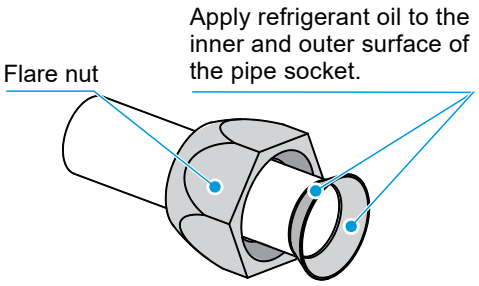

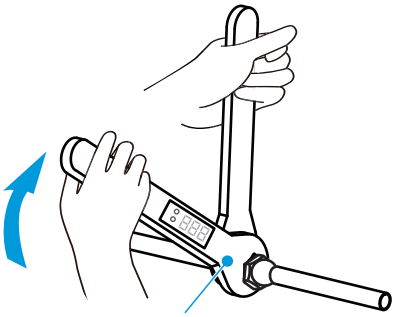

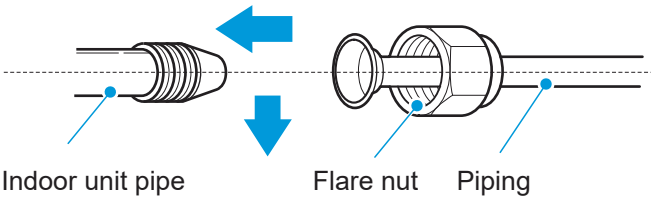

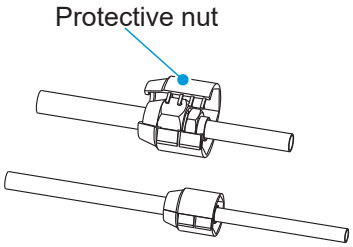

⚠ CAUTION

When flared joints are reused, the flare part should be re-fabricated.

Pipe size (mm)	Tightening torque [N.m (kgf.cm)]
Φ6.35	14.2–17.2 (144–176)
Φ9.52	32.7–39.9 (333–407)
Φ12.7	49.5–60.3 (504–616)
Φ15.9	61.8–75.4 (630–770)
Φ19.1	97.2–118.6 (990–1210)

⚠ CAUTION

Excessive torque will damage the flared mouth and nut, and too small torque cannot tighten the nut, which will cause refrigerant leakage. Please refer to the above table to determine the appropriate tightening torque.

Refrigerant Piping Fixing

Angle iron brackets or round steel hangers should be used for fixing. When the liquid pipe and gas pipe are suspended together, the size of the liquid pipe shall prevail.

Pipe outer diameter (mm)	≤20	20~40	≥40
Horizontal pipe distance (m)	1.0	1.5	2.0
Stand pipe distance (m)	1.5	2.0	2.5

Vacuum Pumping

Connect the vacuuming unit through a manifold to the service port of all stop valves.

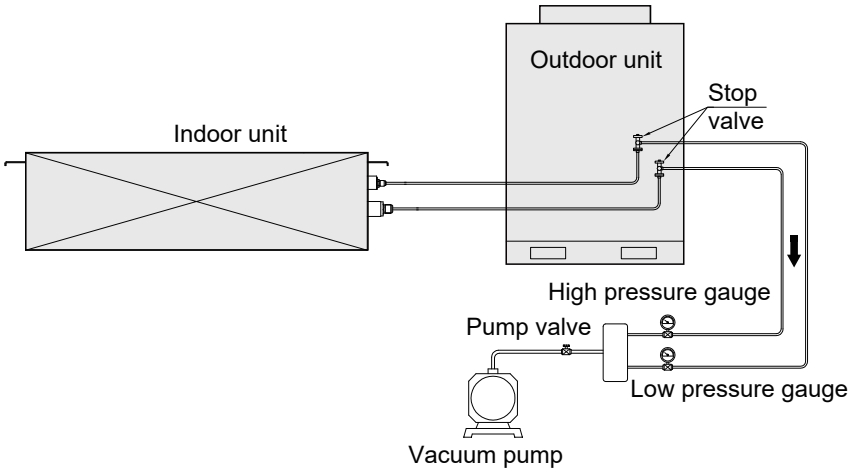

⚠ CAUTION

Do not purge the air with refrigerant of outdoor unit, it will cause fire or system malfunction.

Leak Detection

The leak test must satisfy the specifications of EN378-2.

1 To check for leaks: Vacuum leak test

① Evacuate the system from the liquid and gas piping to –100.7 kPa (–1.007 bar)(5 Torr absolute) for more than 2 hours.

② Once reached, turn off the vacuum pump and check that the pressure does not rise for at least 1 minute.

③ Should the pressure rise, the system may either contain moisture (see vacuum drying below) or have leaks.

2 To check for leaks: Pressure leak test

① Test for leaks by applying a bubble test solution to all piping connections.

② Discharge all nitrogen gas.

③ Break the vacuum by pressurising with nitrogen gas to a minimum gauge pressure of 0.2 MPa (2 bar). Never set the gauge pressure higher than the maximum operation pressure of the unit, i.e. 4.0 MPa (40 bar).

⚠ CAUTION

Under no circumstances shall potential sources of ignition be used in the searching for or detection of refrigerant leaks. A halide torch (or any other detector using a naked flame) shall not be used.

Leak detection fluids are suitable for use with most refrigerants but the use of detergents containing chlorine shall be avoided as the chlorine may react with the refrigerant and corrode the copper pipe-work.

Electronic leak detectors shall be used to detect flammable refrigerants, but the sensitivity may not be adequate, or may need re-calibration. (Detection equipment shall be calibrated in a refrigerant-free area.) Ensure that the detector is not a potential source of ignition and is suitable for the refrigerant used. Leak detection equipment shall be set at a percentage of the LFL of the refrigerant and shall be calibrated to the refrigerant employed and the appropriate percentage of gas (25 % maximum) is confirmed.

NOTE

ALWAYS use a recommended bubble test solution from your wholesaler.

NEVER use soap water:
Soap water may cause cracking of components, such as flare nuts or stop valve caps.
Soap water may contain salt, which absorbs moisture that will freeze when the piping gets cold.
Soap water contains ammonia which may lead to corrosion of flared joints (between the brass flare nut and the copper flare).

Refrigerant Charge

The refrigerant is pre-charged in the outdoor unit at the factory, but additional refrigerant may be necessary depending on the field piping.

⚠ WARNING

Compliance with national gas regulations shall be observed

keep ventilation openings clear of obstruction.

Ensure that the refrigeration system is earthed prior to charging the system with refrigerant.

Label the system when charging is complete (if not already).

Extreme care shall be taken not to overfill the refrigeration system.

⚠ CAUTION

Cylinders shall be kept upright if a siphon tube is present.

Insulation Treatment

Pipes on the liquid and air sides have a low temperature during cooling. Take sufficient insulation measures to prevent condensation.

- Be sure to use a thermal insulation material with a heat resistance of 120°C or higher for the gas pipe.
- The attached insulation material for the part of the indoor unit where the pipe connects must undergo heat insulation treatment that leaves no gaps.
- For outdoor pipelines, additional protective treatments should be performed, such as adding metal duct boxes or wrapping the pipes with aluminum foil materials. Thermal insulation materials directly exposed to the open air will degrade and lose their insulating properties.

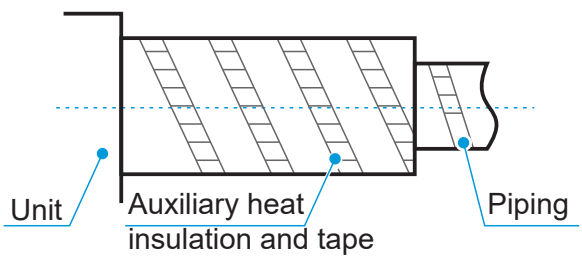

6 Drain Pipe Installation

⚠ CAUTION

Before installation of the drain pipe, determine its direction and elevation to avoid intersection with other pipelines to ensure that the slope is straight.

The highest point of the drain pipe should be equipped with a vent port to ensure the smooth drainage of condensate water, and the vent port must face downwards to prevent dirt from entering the pipe.

Do not connect the drain pipe to the wastewater pipe, sewage pipe, or other pipes that produce corrosive gases or odors. Otherwise, the indoor unit (especially the heat exchanger) may be corroded and odor may enter the room, negatively impacting the heat exchange effects and user experience. The user will assume responsibility for any consequences resulting from failure to abide by instructions.

After the pipeline connection is completed, a water test and a full water test should be done to check whether the drainage is smooth and whether the pipeline system leaks.

The air conditioner drain pipe must be installed separately from other sewage pipes, rainwater pipes and drain pipes in the building.

Adverse slope, convex and concave pipes are prohibited, as improper airflow will cause poor drainage.

Drain pipes need to be evenly wrapped with thermal insulation pipes to prevent condensation.

All joints of the drainage system must be sealed to prevent water leakage.

Please connect the drain pipes in the following ways. Improper installation of the pipes may result in water leakage and damage to furniture and property.

Installation Of Water Drain Pipe For The Indoor Unit

① Units without pumps: Use the attached drain hose to connect to the drain pan outlet and PVC pipe, and fasten the two ends of the drain hose with a cable tie. Then push the thermal insulation pipe to be closely attached to the indoor unit, and finally fasten the end with a cable tie.

Units with pumps: Connect a PVC pipe to the water pump outlet, and fasten it with a cable tie. Then push the thermal insulation pipe until it is closely attached to the indoor unit, and finally fasten the end with a cable tie.

The connection between the two ends of the drain pipes and the connection of the water pump outlet need to be fastened with a cable tie, in combination with PVC/rubber adhesives. Pay attention to the instructions for the use of the adhesives to prevent corrosion to the EPDM rubber. Use hard PVC adhesives for connecting to other water piping. Check that the connections are tight with no leakage.

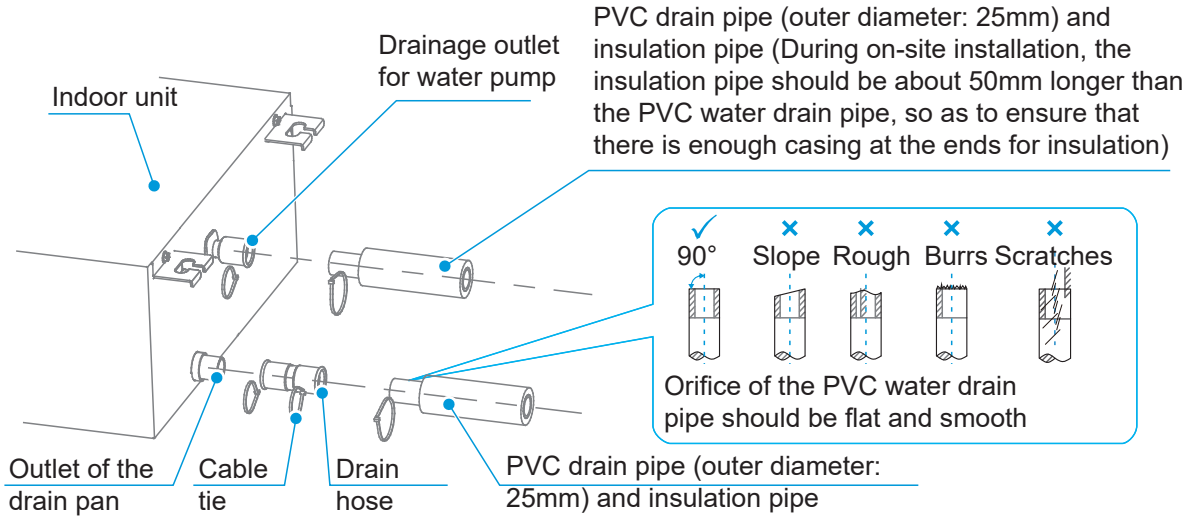

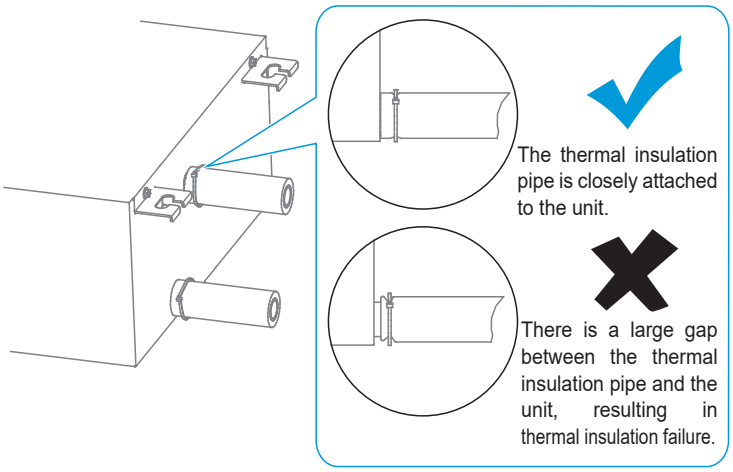

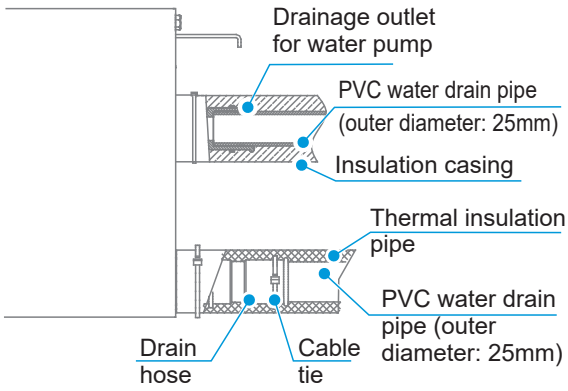

② The water pump connecting pipe and drain pipe (in the indoor part) must be wrapped with heat insulation pipe evenly and bound with cable ties to prevent air from entering and producing condensate.

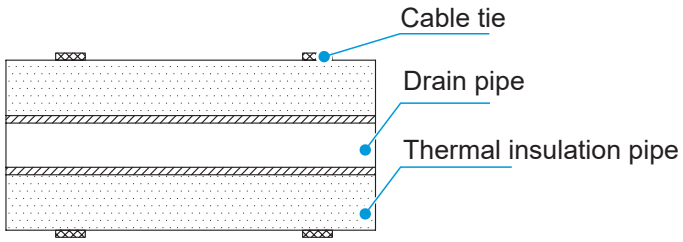

③ To prevent water from flowing back into the air conditioner when it stops running, the drain pipe should be inclined downward to the outdoor side (drainage side), with a downward slope of 1/100 or above. The drain pipe should be positioned in the same direction as the drainage outlet of the unit in the left and right direction, so that the drain pipe does not expand and collect water; otherwise, it may cause abnormal noise.

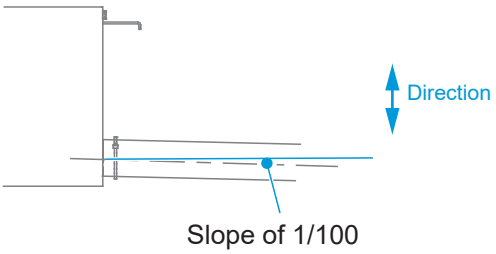

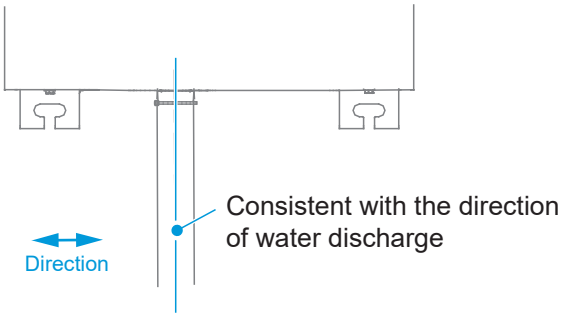

④ When connecting the drain pipe, do not pull the drain pipe forcefully, or it may become loose. The lateral length of the drain pipe should be within 20m, and a support point should be set every 0.8–1.0m to avoid air resistance caused by the deformation of the drain pipe. The drain pipe shall be equipped with a support point every 1.5-2.0m.

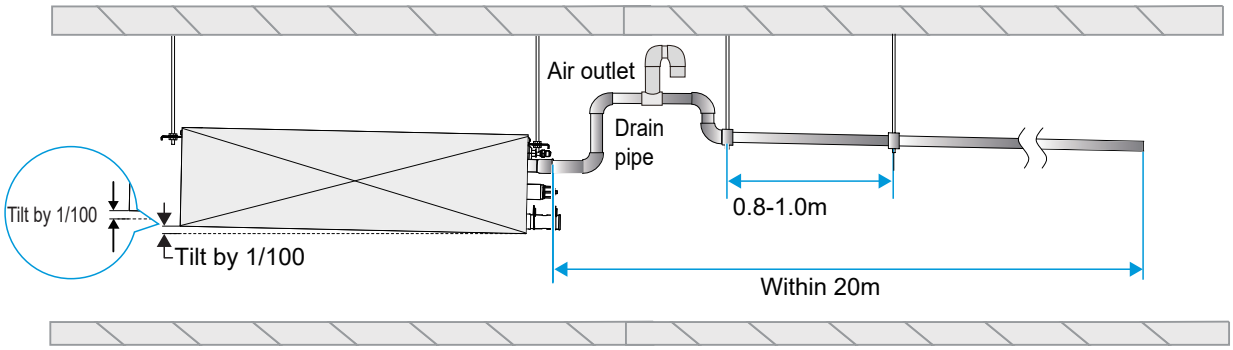

⑥ The end of the drain pipe must be more than 50mm above the ground or from the base of the water drainage slot. In addition, do not submerge it in water. To drain the condensed water directly into a ditch, the water drain pipe must bend upwards to form a U-shaped water plug to stop odors from entering the room via the water drain pipe.

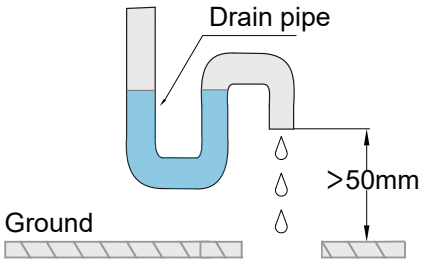

- Method to drain water with the drain pump:

(Unit: mm)

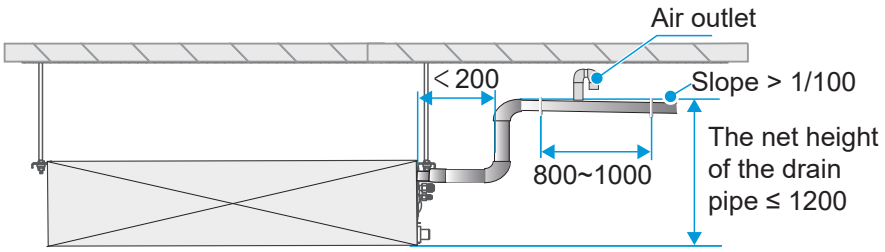

How to connect the drain pipe for the drain pump of a single unit

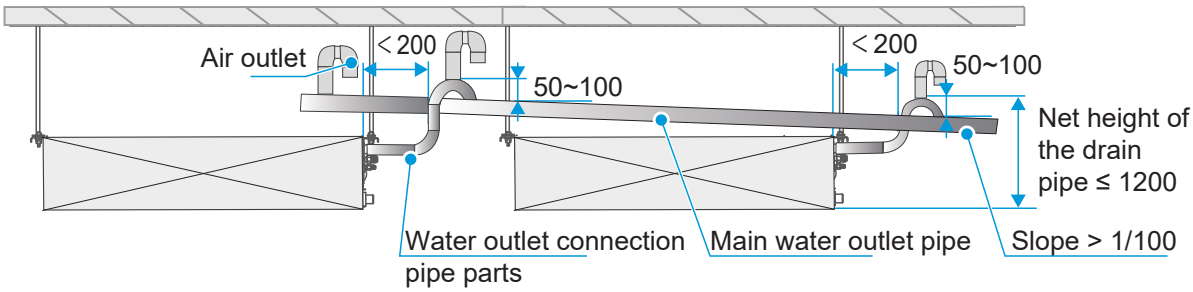

Drain pipes from drain pumps of multiple units are connected to the main drainage pipe to be discharged through the sewage pipe.

⚠ CAUTION

The drain pump lift is 1.2m, calculated from the bottom of the drain pan to the highest point of the drainage pipe. The lifting height of the drain pump is 1m, calculated from the drainage outlet of the drain pump to the highest point of the pipe.

Instead of being installed at the lifting section, the air outlets shall be installed at the highest point of the main drainage pipe.

- Inconsistent drainage directions must be prevented for horizontal drain pipes to avoid adverse slopes and poor drainage.

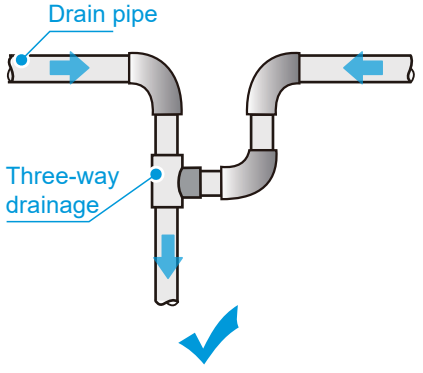

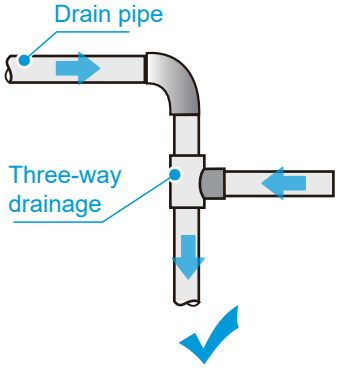

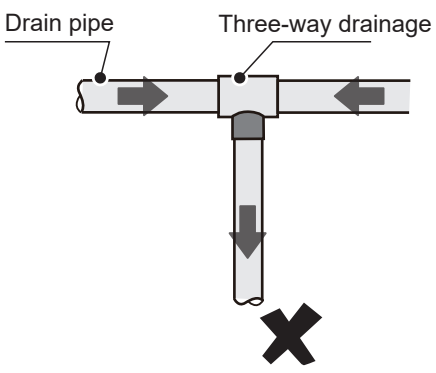

- How to drain water without the drain pump:

(Unit: mm)

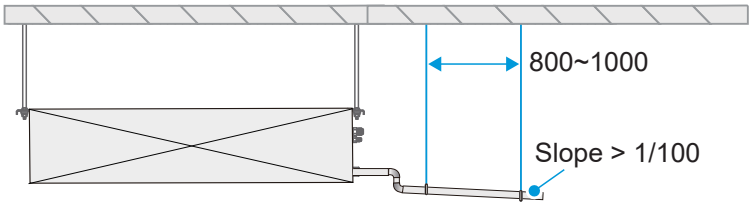

Method to connect the drain pipe for a single unit

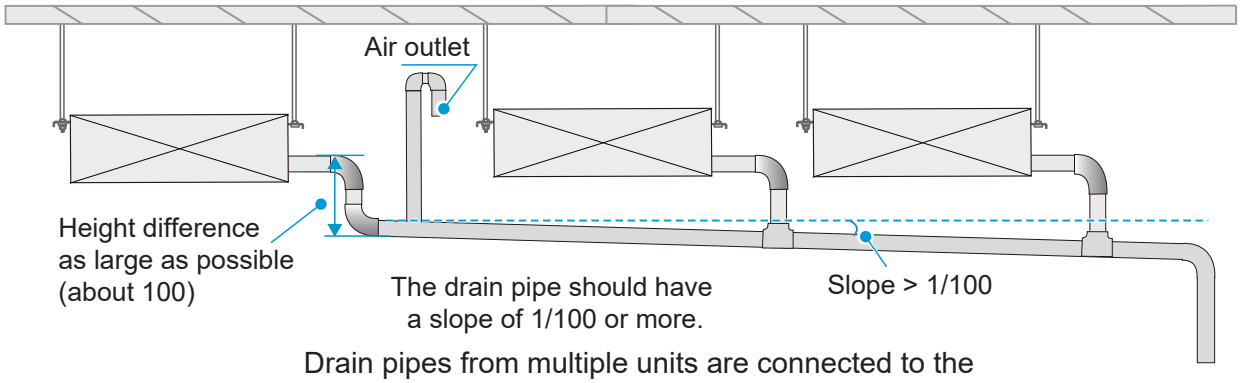

Drain pipes from multiple units are connected to the main drain pipe to be drained through the sewage pipe.

Water Drainage Test

① Before the test, make sure that the water drain piping is smooth, and check that each connection is properly sealed.

② Conduct the water drainage test in a new room before the ceiling is plastered.

- Inject water into the drain pan with the water injection pipe. The amount of water injected is shown in the table below.
- Connect the power supply, and set the air conditioner to operate in cooling mode. Check whether drainage outlets normally drain water (based on drain pipe length, water will be drained 1 minute later), and check connectors for leakage.
- If water is drained through the indoor unit drain pump, loosen the water cover (black round plastic piece) on the unit during the drainage test and check whether the drain pump is operating. If the drain pump has not been started, check whether the drain pump has malfunctioned. Note: The drain pump only starts in cooling mode. While in heating mode, the drain pump remains turned off. After the water drainage test is completed, install the water cover assembly in position. For details on the water cover assembly and the water injection pipe, see figure below.

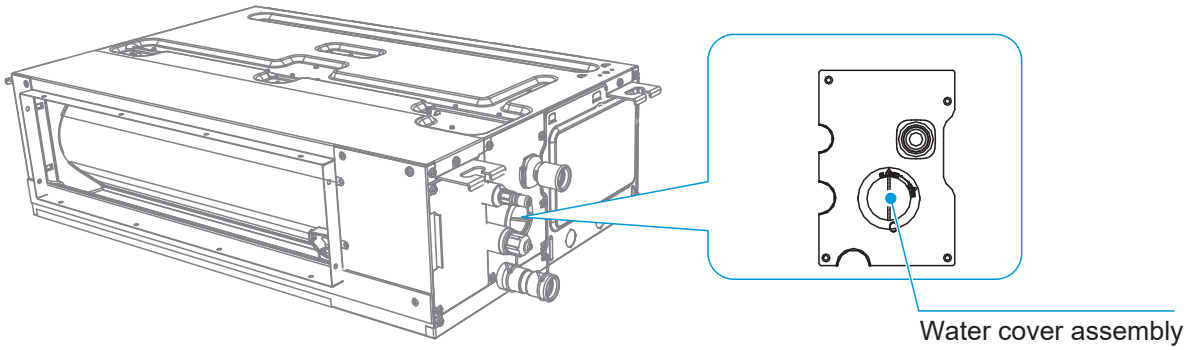

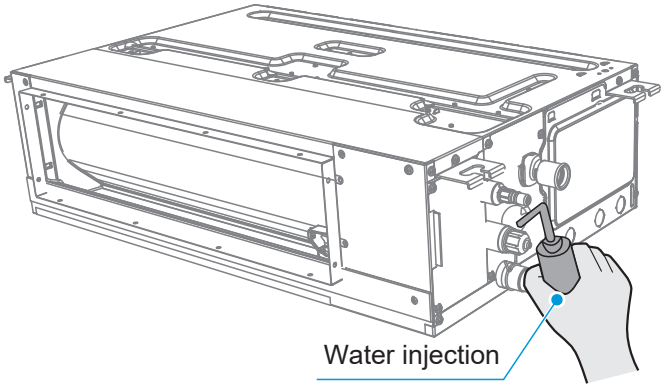

Water injection amount: (Unit: ml)

Capacity (kW)	Water injection amount
kW≤2.8	1100
2.8<kW≤3.6	1400
3.6<kW≤5.6	2000
5.6<kW≤7.1	2200
7.1<kW≤11.2	2400

7 Air Duct Installation

- ☑ Please use locally purchased air ducts and soft air ducts (Use environmentally friendly, odorless materials, otherwise the air conditioner may generate odor when it runs).
- ☑ Install the flange at the air return side, and use aluminum foil tape to seal the connection part between the flange and the air duct to avoid air leakage.
- ☑ Use aluminum foil tape to seal the connection part between the flange at the air supply side and the air duct to avoid air leakage.
- ☑ The air ducts on the air supply side shall be insulated to prevent condensation.
- ☑ When installing the air duct and its components, need to fix and adjust the supports and suspension brackets to ensure they are in the right position and subject to uniform force.
- ☑ Make sure that the air duct and its components are clean before installation.
- ☑ After installation, carry out the air tightness test on the air duct to ensure its air leakage meets China's standards.

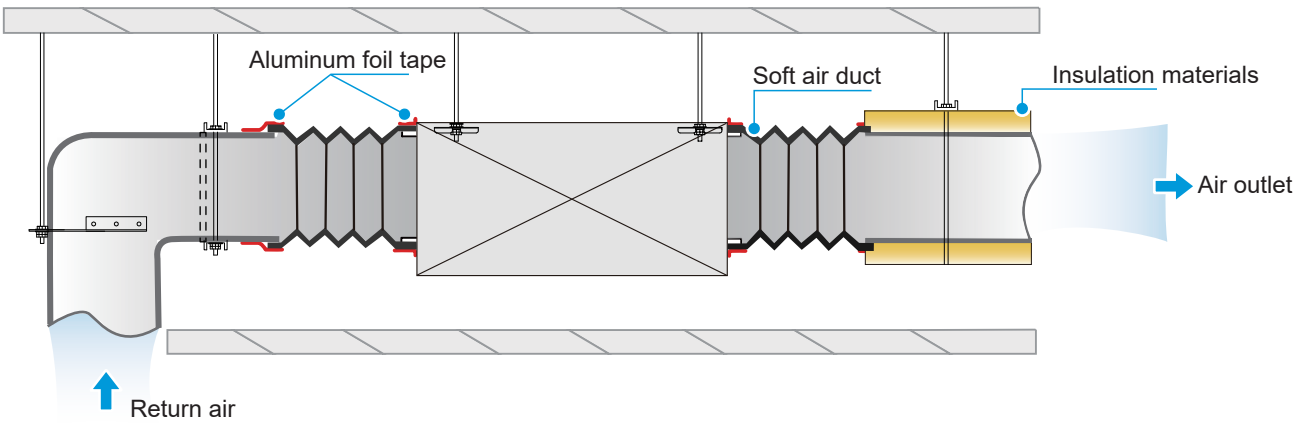

⚠ CAUTION

Connect the air outlet and return air inlet to the ceiling opening properly to avoid short circuit caused by return air. (See the figure below)

Use canvas or soft air duct to connect the indoor unit and air duct at a distance (width) of 150-300mm.

Do not lay wires, cables or other pipes containing toxic, flammable, and explosive gases or liquids inside the air ducts.

The air duct regulating device shall be installed in a position that is easily accessible, flexible, and reliable.

The air duct should be securely connected to the vent.
The frame shall fit snugly into the building decoration, and should appear neat and flexible. It shall not be twisted or warped.

If the air vent is installed horizontally, its deviation shall not exceed 3/1000; if installed vertically, its deviation shall not exceed 2/1000.

All the air vents in one room shall be neatly installed at the same height.

All metal accessories (including supports, suspension brackets, and brackets) for the piping system shall undergo anti-corrosion treatment.

Connection between air vent and air duct wrong

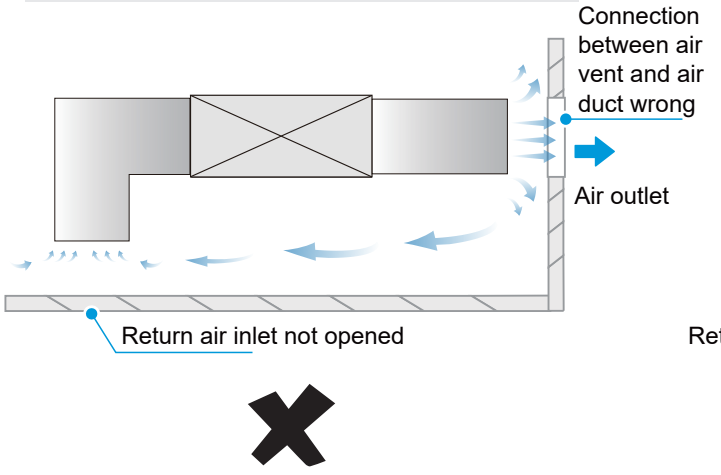

Air vent size and position wrong

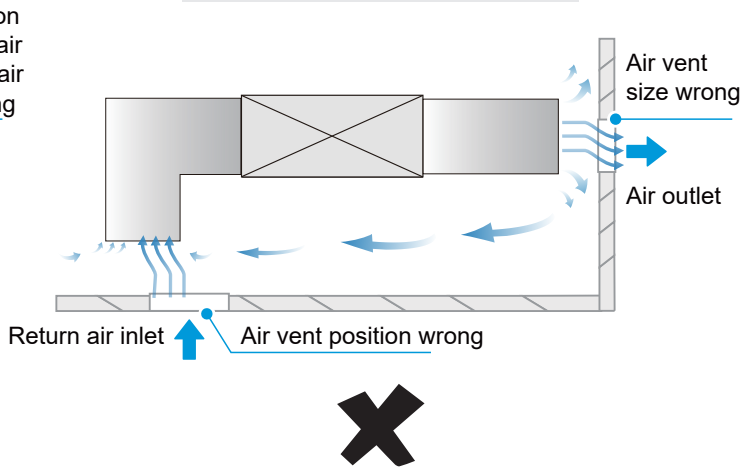

Air vent size and position correct

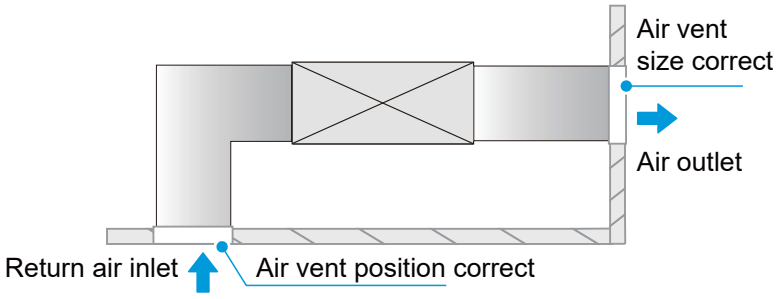

8 Electrical Connection

⚠ DANGER

The power supply must be cut off before any electrical work is carried out. Do not conduct electrical work when the power is on; otherwise, it may cause serious personal injury.

The air conditioning unit must be earthed reliably and must meet the requirements of the local country/region. If the earthing is not reliable, serious personal injury due to electric leakage may occur.

⚠ WARNING

The appliance shall be installed in accordance with national wiring regulations.

Installation, inspection or maintenance operations must be completed by professional technicians. All parts and materials must comply with the relevant regulations of the local country/region.

The air conditioning unit must be equipped with a special power supply, and the power supply voltage should conform to the nominal working voltage range of the air conditioning unit.

The power supply of the air conditioning unit must be equipped with a power disconnect device that conforms to the requirements of relevant local technical standards for electrical equipment. The power disconnecting device must be equipped with short circuit protection, overload protection and electric leakage protection. The clearance between open contacts of the power disconnecting device shall be at least 3mm.

The core of the power supply cable must be made of copper, and the wire diameter should meet the current-carrying requirements. For details, refer to the "Power supply cable Diameter and Electric Leakage Protector Selection". A wire diameter that is too small may cause the power supply cable to heat up, resulting in a fire.

The power supply cable and the earth wires should be secured reliably to avoid stress on the terminals. Do not pull the power supply cable forcibly; otherwise, the wiring may become loosened or the terminal blocks may be damaged.

Strong current wires such as power supply cable cannot be connected to weak current wires such as communication wiring; otherwise, the product may be seriously damaged.

Do not bond and connect the power supply cable. Bonding and connecting the power supply cable may cause it to heat up, resulting in a fire.

⚠ CAUTION

Avoid bonding and connecting the communication wiring. If doing so is unavoidable, at the very least, ensure a reliable connection by crimping or soldering and make sure the copper wire at the connection is not exposed; otherwise, communication failure may occur.

The power supply cable and communication wiring must be routed separately, with a distance of over 5 cm. Otherwise, communication failure may occur.

Keep the vicinity of the air conditioning unit as clean as possible to avoid small animals from nesting and biting the cables. If a small animal touches or bites the cables, short circuiting or electric leakage may occur.

Do not connect the earth wires to the gas pipe, water pipe, lightning rod earth wires or telephone earth wires.

Gas pipe: Risk of explosion and fire when gas leaks.

Water pipe: If rigid plastic pipes are used, there will be no earthing effect.

Lightning rod earth wires or telephone earth wires: In the event of lightning strikes, abnormal earth potential may rise.

After all wiring is completed, check carefully before turning on the power supply.

Electrical Characteristics

Capacity (kW)	Electric Specifications Of The Indoor Unit				Indoor Fan Motor	
	Frequency (Hz)	Voltage (V)	MCA (A)	MFA (A)	Rated Motor Output (W)	FLA (A)
1.5	50/60	220~240	0.88	15	20	0.70
2.2			0.88		20	0.70
2.8			0.88		20	0.70
3.6			0.94		20	0.75
4.5			1.10		30	0.85
5.6			1.10		30	0.85
7.1			1.20		50	0.94
8.0			1.70		60	1.35
9.0			1.70		60	1.35
11.2			1.70		60	1.35

NOTES:

MCA: Min. Circuit Amps. (A), which is used to select the minimum circuit size to ensure safe operation over a long period of time.

MFA: Max. Fuse Amps. (A), which is used to select the circuit breaker.

FLA: Full Load Amps. (A), which is the full load current of the indoor fan motor (reliable operation at the fastest speed setting).

Schematic Figure Of The Main Terminal Blocks Of Main Control Board

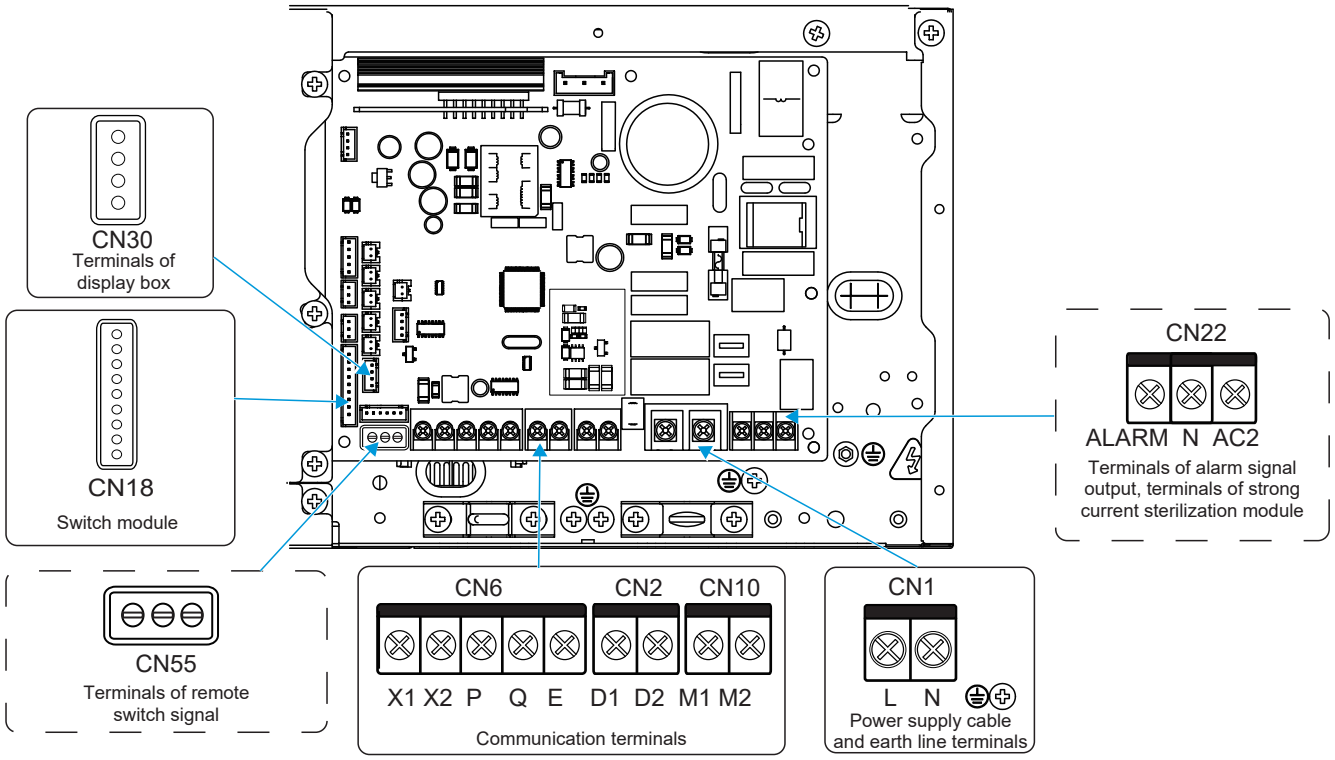

⚠ CAUTION

All weak point connection points meet SELV, such as X1, X2, P, Q, E, M1, M2, CN18, CN55 etc.

Wiring

1 Open the indoor unit's electric control box cover.
① Remove the screws at the positions shown in the figure;
② Pull the bottom end of the electric control box cover horizontally;
③ Remove the electric control box cover by pulling downwards.

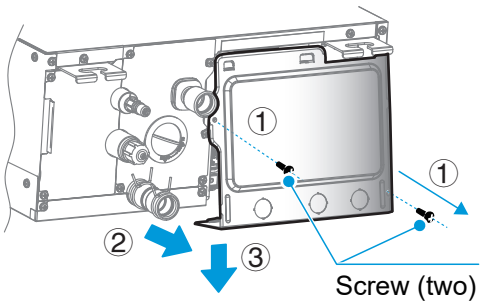

2 Connect the strong current wires (power supply cable, alarm signal output wires, and strong current sterilization wires) and weak current wires (communication wiring, display box communication wiring, remote switch communication wiring, expansion board communication wiring) to the electric control box through the strong and weak current inlets of electric control box.

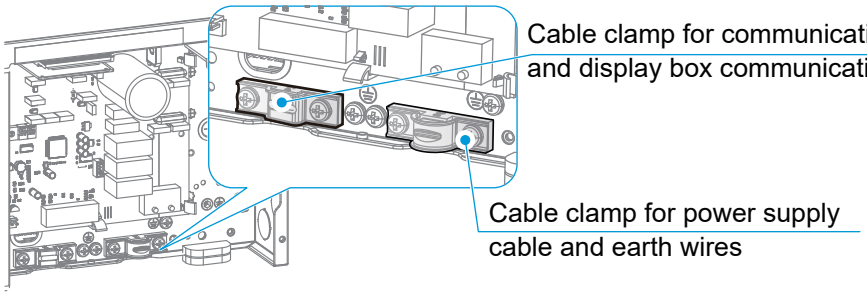

⚠ CAUTION

Power supply cable must be routed separately from the other cable such as communication wiring and display box communication wiring.

The strong and weak current wires must be separated.

Alarm signal output, strong current sterilization, remote switch, and expansion board are optional.

3 Power supply cable connection

① Connection between the power supply cable and power supply terminal

The power supply terminal of the indoor unit is fixed on the main control board, the power supply cable is connected to the power supply terminal labeled "CN1" on the main control board. The live and neutral wires are connected according to the main control board logos "L" and "N", and the earth wires is directly connected to the electric control box sheet metal part.

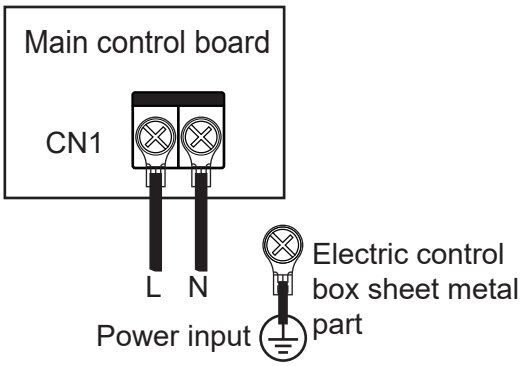

⚠ CAUTION

A Do not bond and connect the power supply cable. Bonding and connecting the power supply cable may cause it to heat up, resulting in a fire.

B The power supply cable must be crimped reliably using an insulated circular terminal block, and then connected to the power supply terminal of the indoor unit, as shown in the figure below.

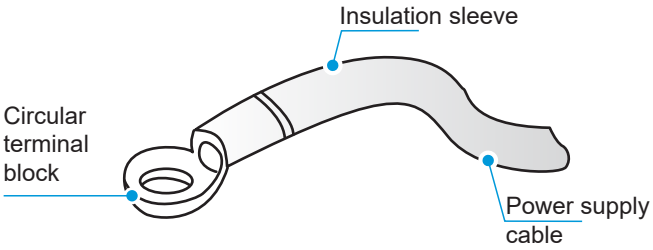

C If it fails to crimp the insulated circular terminal block due to on-site limitations, connect the power supply cable of the same diameter to both sides of the power supply terminal block of the indoor unit, as shown in the figure below.

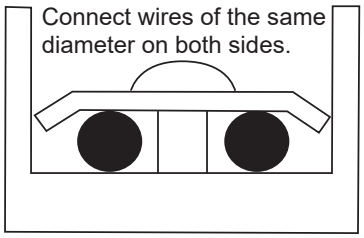

D Do not press the power supply cable of the same wire diameter on the same side of the terminal. Do not use two power supply cable of different wire diameters for the same terminal blocks; otherwise, they can easily loosen due to uneven pressure and cause accidents, as shown in the figure below.

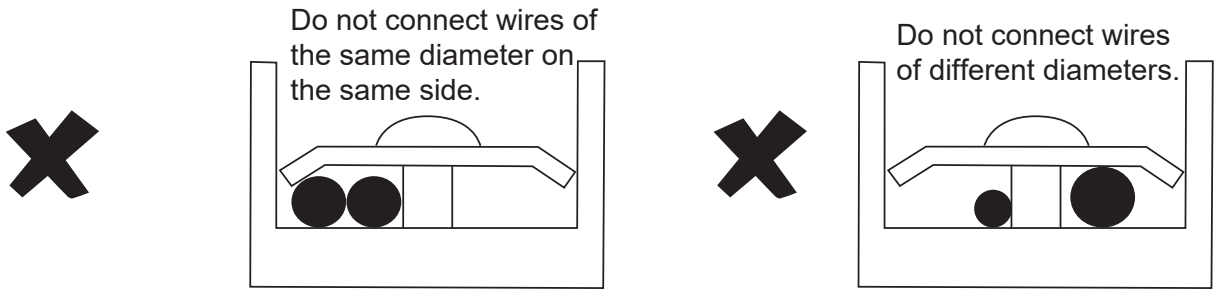

E The connected power supply cable should be secured with a wire clamp to prevent loosening, as shown in the right figure.

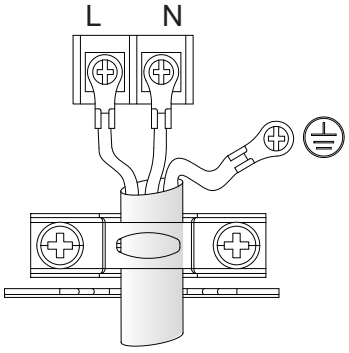

② Power supply cable system connection

Power supply cable system connection depends on the methods of communication between the indoor unit and outdoor unit. For the HyperLink (M1M2) communication method, indoor units are allowed to have independent power supplies. For other communication methods, indoor units should be provided with uniform power supplies.

A Indoor units are provided with independent power supplies*, which are wired as follows:

For HyperLink (M1M2) communication with independent power supply:

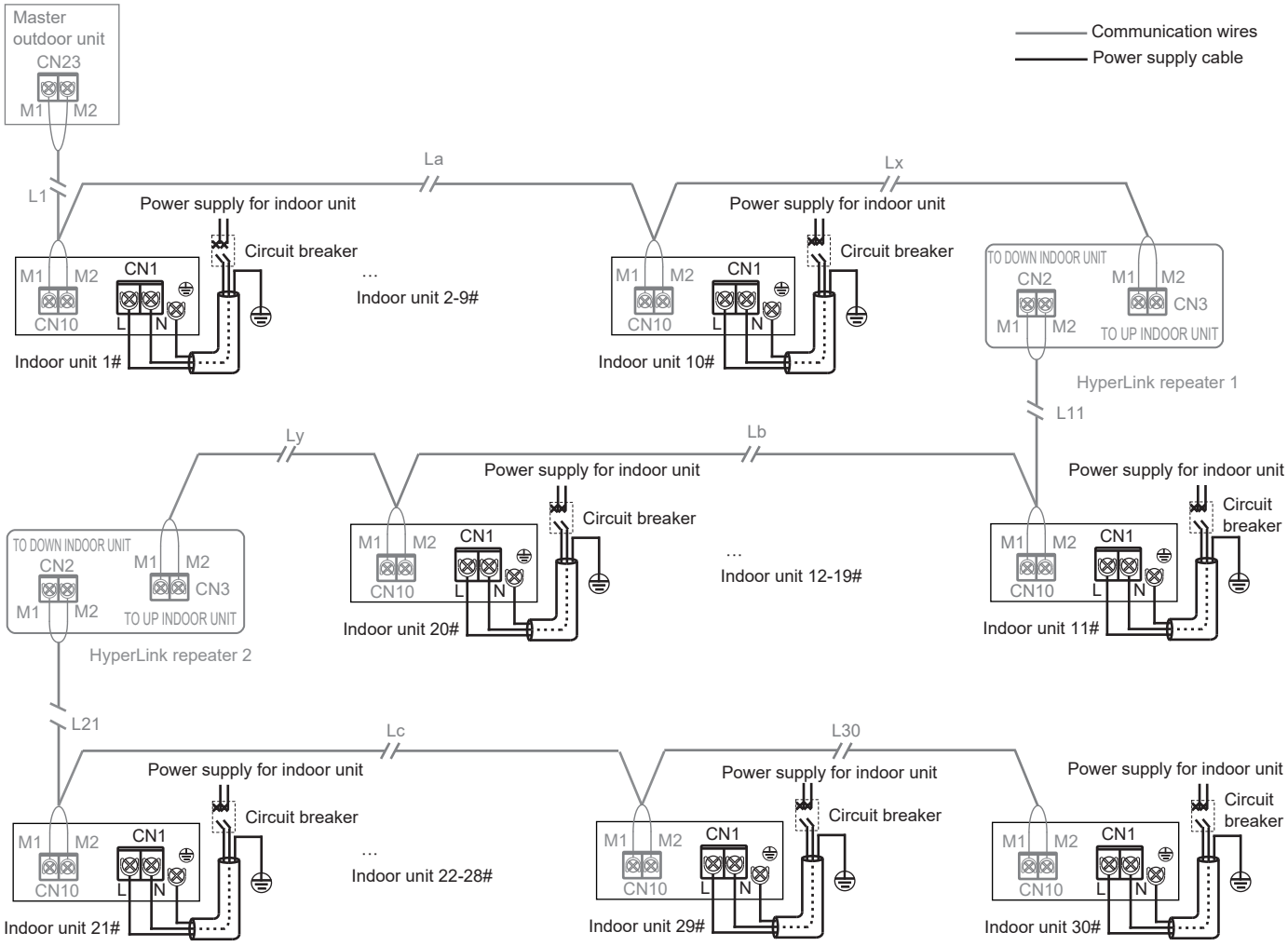

⚠ CAUTION

When the indoor units are provided with independent power supplies, the indoor units in the same refrigerant system should be V8 indoor units*, and the communication between indoor units and outdoor unit adopts a HyperLink (M1M2) with an independent power supply.

This connection method has the function of an independent power supply, so in the same refrigerant system, the number of indoor units must not exceed 30 sets, and a maximum of only two repeaters may be installed*.

One repeater shall be added for every 10 indoor units or a communication wire length of 200m added.

B Indoor units are provided with unified power supply*, which are wired as follows:

1. HyperLink (M1M2) communication with the unified power supply:

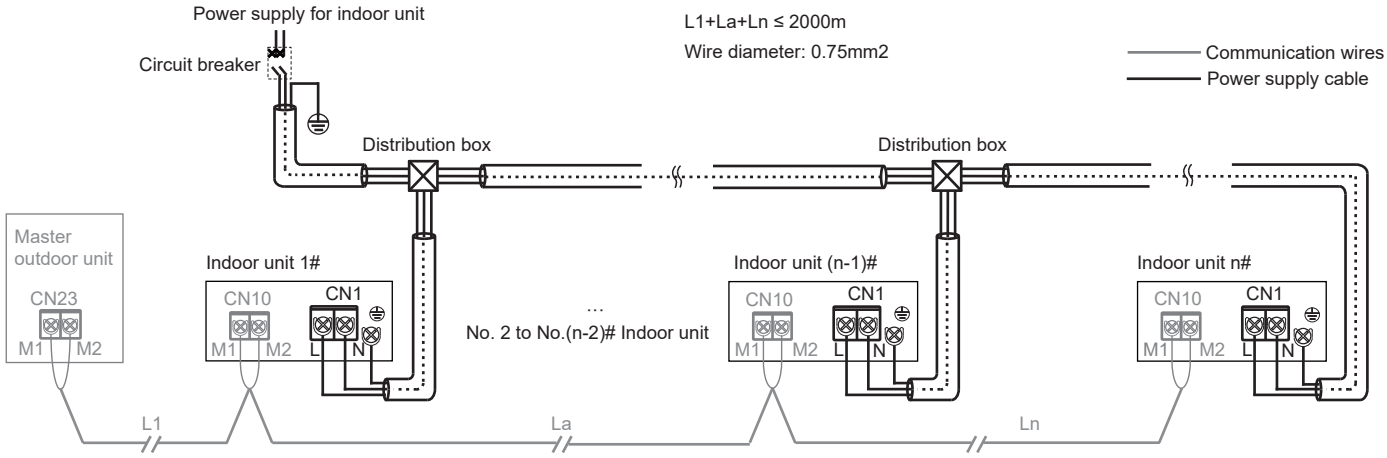

2. P/Q communication:

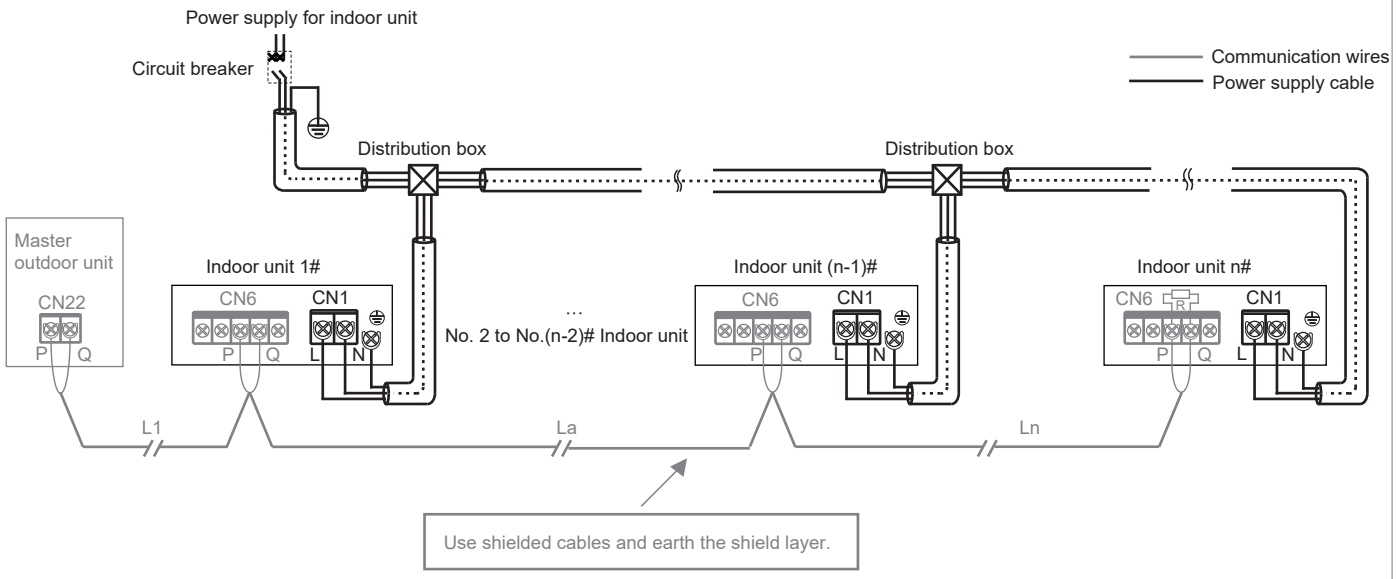

3. P/Q/E communication:

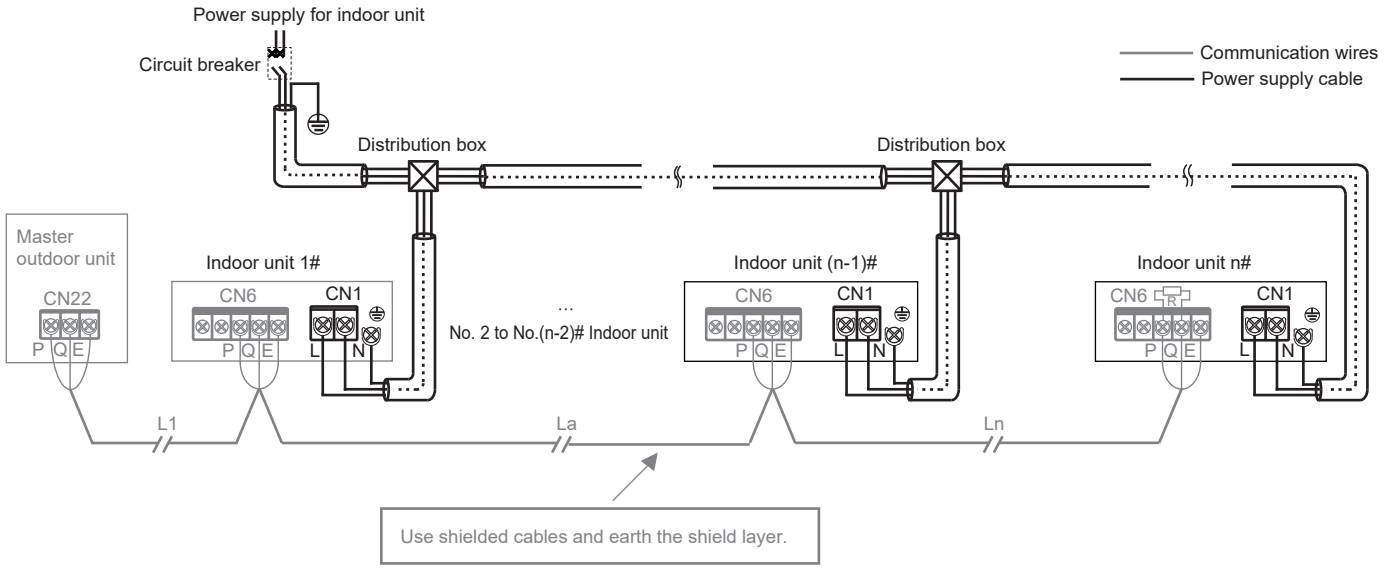

⚠ CAUTION

When the indoor units are provided with a unified power supply, if the indoor units in the same refrigerant system are V8 indoor units, then indoor units and outdoor unit can communicate either via HyperLink (M1M2) with a unified power supply, or via P/Q. If some of the indoor units in the same refrigerant system are non-V8 series, then indoor units and outdoor unit can only communicate via P/Q/E communication.

Both P/Q communication and HyperLink (M1M2) communication are indoor and outdoor communication, and only one of them can be selected. Do not connect P/Q communication and HyperLink (M1M2) communication at the same time in the same system. Do not connect HyperLink (M1M2) communication to D1D2 communication.

NOTE

V8 indoor units *: with V8 printed on the packaging carton

Independent power supply *: With separate circuit breakers, the power supply for each indoor unit can be controlled independently.

Unified power supply *: All the indoor units in the system are controlled by one circuit breaker.

Repeater *: power supply repeater, which is used to compensate for the voltage drop due to excessive length of line or line resistance when the main control board of outdoor unit provides independent power supply for indoor units through the HyperLink (M1M2) communication wiring. It is only used in refrigerant systems where indoor units are provided with an independent power supply.

4 Communication wiring connection

① Selection of communication method for indoor units

Equipped with independently developed HyperLink (M1M2) communication, V8 series indoor units also preserve the previous RS-485 (PQE) communication method. They are compatible with non-V8 indoor units. Pay attention to the type of indoor unit before connecting communication wiring. Please refer to the following table to select an appropriate communication method.

Indoor unit type	Optional communication method between indoor units and outdoor unit	Remarks
Are all the indoor units in the system V8 series	HyperLink (M1M2) communication	1. Independent power supply for indoor units*. 2. Any topology connection of communication wiring. 3. Two-core and non-polar communication for M1M2.
	RS-485 (PQ) communication	1. The indoor units need to be powered uniformly. 2. The communication cables must be connected in serial. 3. Two-core and non-polar communication for PQ.
Are some of the indoor units in the system non-V8 series	RS-485 (PQE) communication	1. The indoor units need to be powered uniformly. 2. The communication cables must be connected in serial. 3. PQE cables must be 3-core and PQ non-polar.

② Table of selection of communication wiring diameter

Function	Indoor unit and outdoor unit communication				One controller to one indoor unit (Two controllers to one indoor unit) Communication	One-to-more (centralized controller) Communication
Item	HyperLink (M1M2) communication (Indoor units are powered separately)	HyperLink (M1M2) communication (Indoor units are powered uniformly)	P/Q communication (Indoor units are powered uniformly)	P/Q/E communication (Indoor units are powered uniformly)	X1X2 communication	D1D2 communication
Wire diameter	2 × 1.5mm² Wire resistance ≤ 1.33Ω/100m	2 × 0.75mm²	2 × 0.75mm² (shielded cable)	3 × 0.75mm² (shielded cable)	2 × 0.75mm² (shielded cable)	2 × 0.75mm² (shielded cable)
Length	≤ 600m (add two repeaters)	≤ 2000m	≤ 1200m	≤ 1200m	≤ 200m	≤ 1200m

⚠ CAUTION

Please select the communication wiring according to the requirements in the above reference table. Use shielded cables for communication when strong magnetism or interference is present.

On-site wiring must comply with the relevant regulations of the local country/region and must be completed by professionals.

Do not connect the communication wiring when the power is on.

Do not connect the power supply cable to the communication terminal; otherwise, the main control board may be damaged.

The standard value of the screw torque of the communication wiring terminal is 0.5N·m. Insufficient torque may cause poor contact; excessive torque may damage the screws and power supply terminals.

Both HyperLink (M1M2) communication and PQ communication are internal and external, so only one of the two can be selected. Do not connect both HyperLink (M1M2) communication wiring and PQ communication wiring to the same system, otherwise the indoor unit and outdoor unit cannot communicate normally.

If some of the indoor units in the same refrigerant system are non-V8 series, only P/Q/E communication can be selected for the indoor unit and outdoor unit communication. The three-core shielded cable of 3×0.75mm2 is required to connect "P", "Q", and "E".

Do not bundle the communication wiring with the refrigerant pipeline, power supply cable, etc. When the power supply cable and the communication wiring are laid in parallel, a distance of more than 5cm should be maintained to prevent interference from the signal source.

When the construction personnel of the indoor unit and outdoor unit are working separately, information communication and synchronization are required. Do not connect the outdoor unit to HyperLink (M1M2) and the indoor unit to PQ. Do not connect the outdoor unit to PQ and the indoor unit to HyperLink (M1M2).

Bonding and connecting the communication wiring should be avoided, but if it is used, at the very least, ensure a reliable connection by crimping or soldering and make sure the copper wire at the connection is not exposed; otherwise, communication failure may occur.

③ Indoor unit and outdoor unit communication

A HyperLink (M1M2) communication (with independent power supply)

Single unit: HyperLink (M1M2) communication is a new type of indoor unit and outdoor unit communication technology. When the indoor units are provided with independent power supplies, use 2×1.5mm2 communication cables. M1 and M2 ports are located at terminal block "CN10" of the main control board. There is no distinction between negative and positive electrodes. For details, see the following figure:

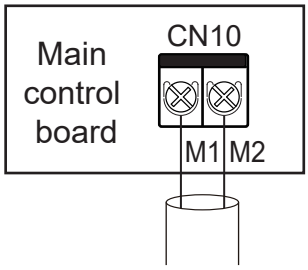

⚠ CAUTION

Do not connect the HyperLink (M1M2) communication wiring to the PQ or D1D2 communication wiring.

System: The HyperLink (M1M2) communication wiring with an independent power supply between indoor unit and outdoor unit can reach a length of up to 600 meters, supporting any topology connection. The following figure shows a serial connection:

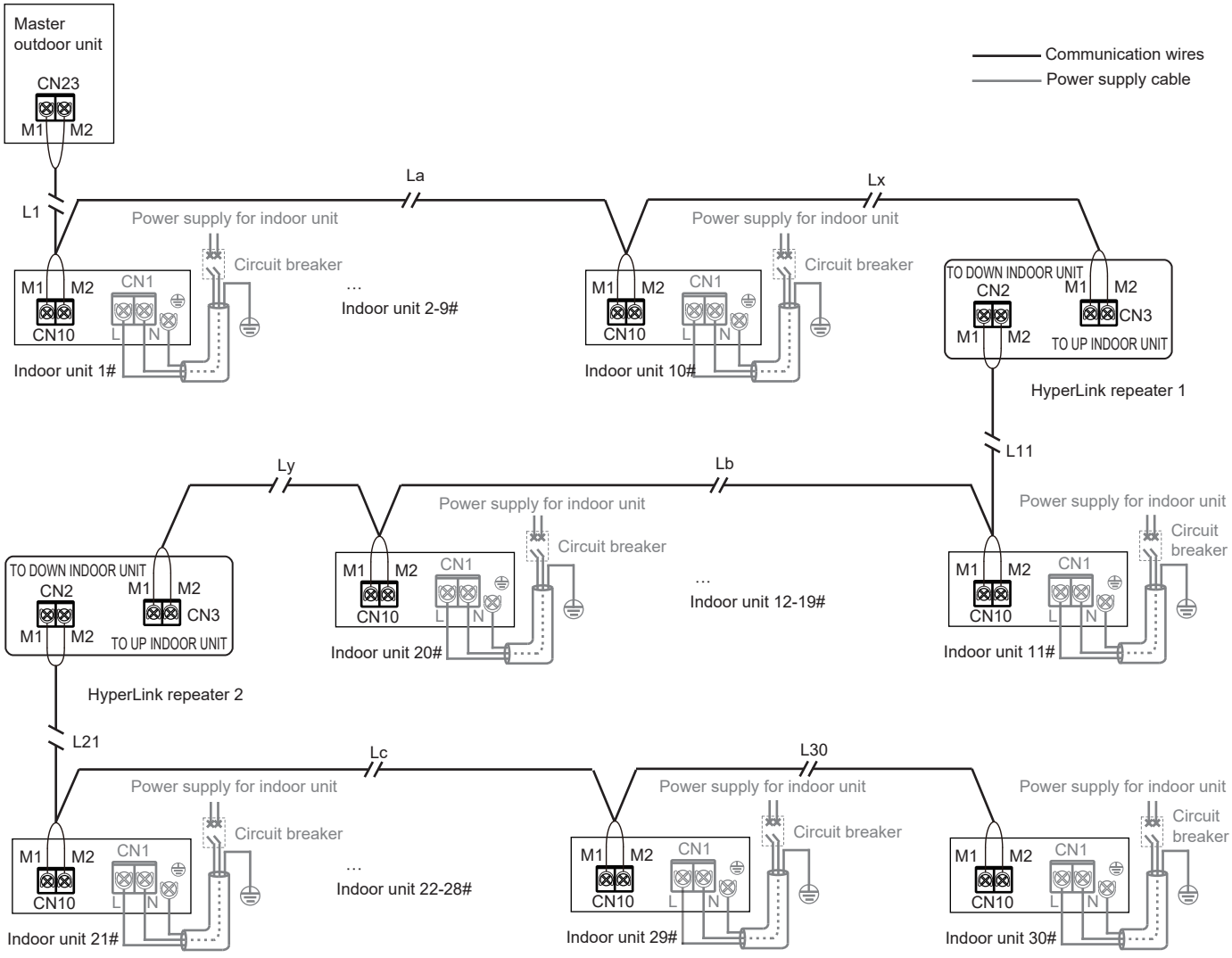

L1+La+Lx ≤ 200m L11+Lb+Ly ≤ 200m L21+Lc+L30 ≤ 200m

For other connection methods (tree topology, star topology, ring topology), please refer to the technical manual or consult technical personnel.

⚠ CAUTION

If the total length is less than or equal to 200m and the total number of indoor units is less than or equals to 10 sets, the electronic expansion valve in indoor unit can be powered and controlled by the master outdoor unit.

If the total length is longer than 200m or the total number of indoor units is more than 10 sets, a repeater is required to increase the bus voltage.

The limit of one repeater is 200m cable length or maximum 10 indoor units.

A maximum of two repeaters can be installed in the same refrigerant system.

HyperLink (M1M2) communication can control the electronic expansion valve in indoor unit independently, this function requires the maximum number of indoor units in the same refrigerant system must be less than or equal to 30 sets.

The repeaters and the outdoor units must connect to an unified power supply system, or the repeater uses an uninterruptible power supply.

Refer to the Installation and Operation Manual of repeater for detail.

For one repeater application, communication cable among the master outdoor unit, indoor units and repeater must use the CN3 port in repeater, the communication cable among repeater and the rest indoor units must use the CN2 port in repeater.

For two repeaters application, the communication cable among the master outdoor unit, indoor units and repeater 1 must use the CN3 port in repeater1, the communication cable among repeater 1, indoor units and repeater 2 must use the CN2 port in repeater 1 and CN3 port in repeater 2.

The electronic expansion valve in indoor unit can be powered and controlled by the master outdoor unit. If a separate power supply applied for indoor units.

The repeater is optional, contact dealer for detail.

B HyperLink (M1M2) communication (with unified power supply)

Single unit: When the indoor units are provided with unified power supply, it is not necessary for HyperLink (M1M2) communication wiring to provide an independent power supply for indoor units. In this case, use 2×0.75mm^2 communication cables. M1 and M2 ports are located at terminal block "CN10" of the main control board. There is no distinction between negative and positive electrodes. For details, see the following figure:

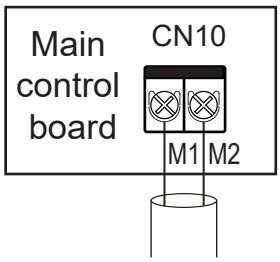

Connect to outdoor unit M1M2 (HyperLink)

⚠ CAUTION

Do not connect the HyperLink (M1M2) communication wiring to the PQ or D1D2 communication wiring.

System: The HyperLink (M1M2) communication wiring with a unified power supply between indoor unit and outdoor unit can reach a length of up to 2000 meters, supporting any topology connection. The following figure shows a serial connection:

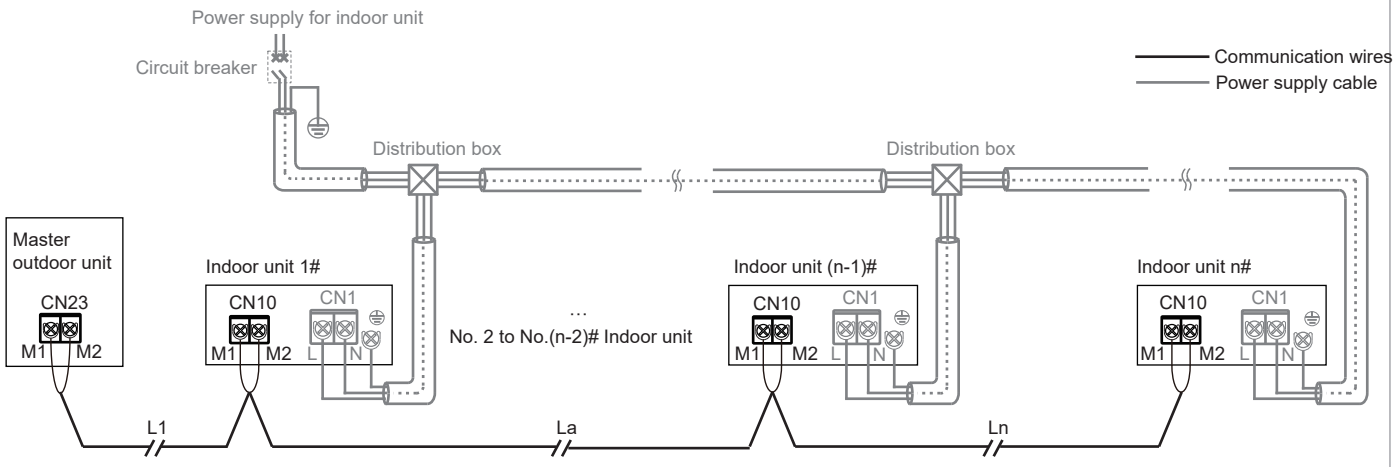

L1+La+Ln ≤ 2000m

For other connection methods (tree topology, star topology, ring topology), please refer to the technical manual or consult technical personnel.

⚠ CAUTION

When HyperLink (M1M2) with a unified power supply is available, a unified power supply for indoor units is required. For details, see "Power supply cable Connection".

When HyperLink (M1M2) with a unified power supply is available, there is no need to connect a repeater to the system.

C P/Q communication

Single unit: Use a shielded cable for the P/Q communication and properly earth the shield layer. P and Q ports are located at terminal block "CN6" of the main control board. There is no distinction between negative and positive electrodes. Connect the shield layer to the sheet metal of the electric control box, as shown in the following figure:

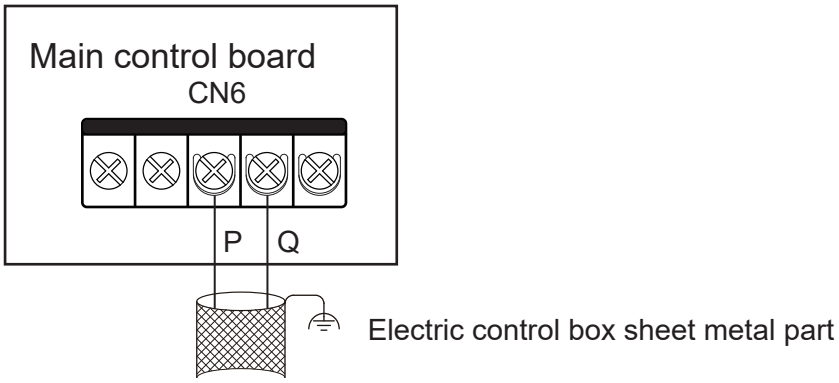

Connect to the outdoor unit PQ

System: The maximum total length of the P/Q communication cable of the Indoor unit and outdoor unit can be up to 1200m, and can be connected in serial, as shown in the figure below:

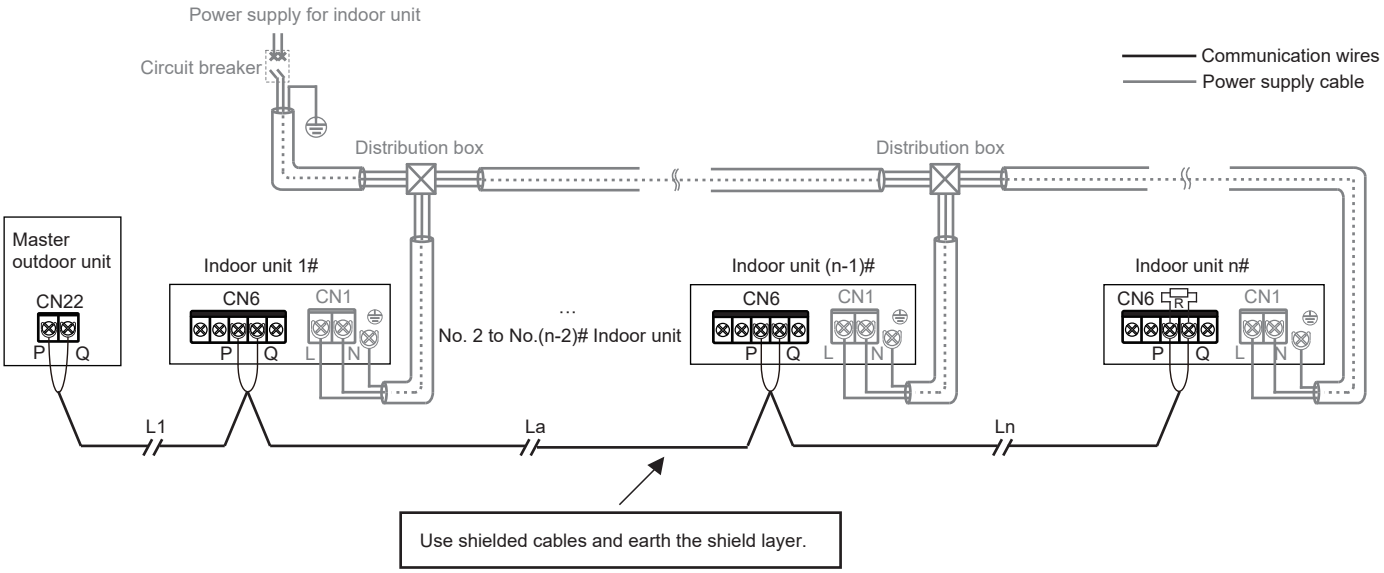

L1+La+Ln ≤ 1200m

D P/Q/E communication

If some of the indoor units in the same refrigerant system are non-V8 series, it is required to connect "P", "Q", and "E" for P/Q/E communication.

Single unit: Use a shielded cable for the P/Q/E communication and properly earth the shield layer. P, Q, and E ports are located at terminal block "CN6" of the main control board. There is no distinction between negative and positive electrodes. Connect the shield layer to the sheet metal of the electric control box, as shown in the following figure:

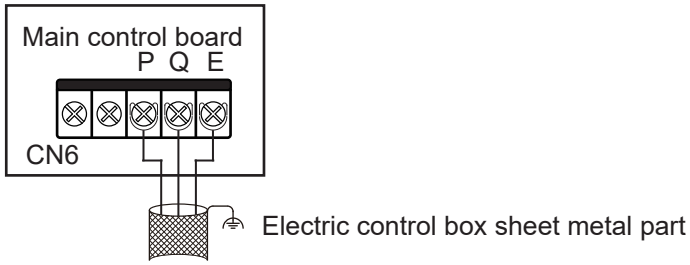

Connect to the outdoor unit PQE

System: The maximum total length of the P/Q/E communication cable of the indoor unit and outdoor unit can be up to 1200m, and can be connected in serial, as shown in the figure below:

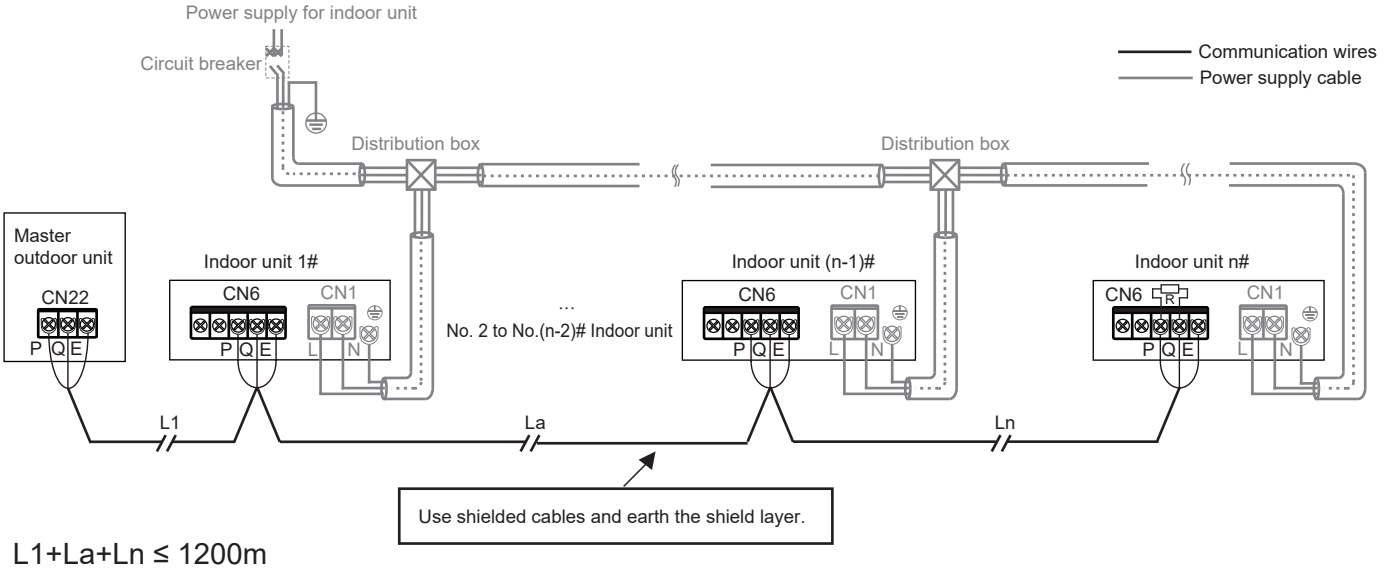

L1+La+Ln ≤ 1200m

⚠ CAUTION

When P/Q or P/Q/E communication is used, the indoor units need to be powered uniformly.

Either P/Q, P/Q/E communication or HyperLink (M1M2) communication can be selected. If it is required for indoor units to have independent power supplies, then HyperLink (M1M2) communication must be selected.

Use only shielded cables for P/Q or P/Q/E communication. Otherwise, the indoor unit and outdoor unit communication may be affected.

A matching resistor needs to be added to the last indoor unit on the PQ (in the accessory bag of the outdoor unit).

④ X1/X2 communication cable connection

The X1X2 communication wiring is mainly connected to the wired controller to achieve one controller per indoor unit and two controllers per indoor unit. The total length of the X1X2 communication wiring can reach 200 meters. Please use shielded wires, but the shield layer cannot be earthed. X1 and X2 ports are located at terminal block "CN6" of the main control board. There is no distinction between negative and positive electrodes. For details, see the following figure:

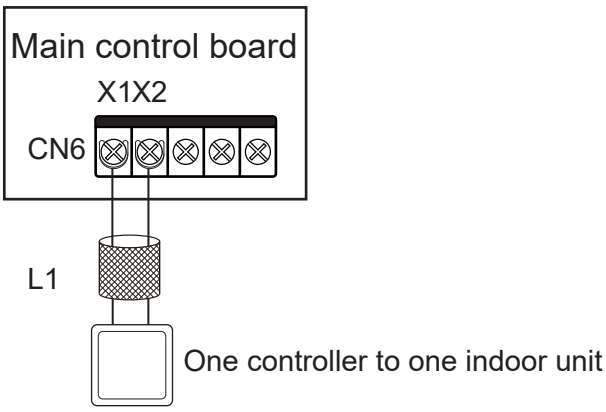

One controller to one indoor unit

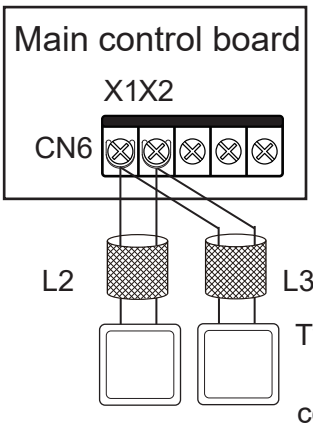

Two controllers to one indoor unit
(Master-slave wired controller needs to be set. For details, see the wired controller manual.)

L1 ≤ 200m, L2+L3 ≤ 200m.

⚠ CAUTION

Two wired controllers of the same model can be used to control one indoor unit at the same time. In this case, need to set one controller to be the master and the other to be the slave. For details, see the wired controller manual.

⑤ D1D2 communication wiring connection (limited to outdoor unit and system configuration)

A Achieving one-to-multiple and two-to-multiple functions of the indoor unit wired controller through D1D2 communication (a maximum of 16 sets)

D1D2 communication is 485 communication. The one-to-more and two-to-more functions of the indoor unit wired controller can be achieved through D1D2 communication, as shown in the figure below:

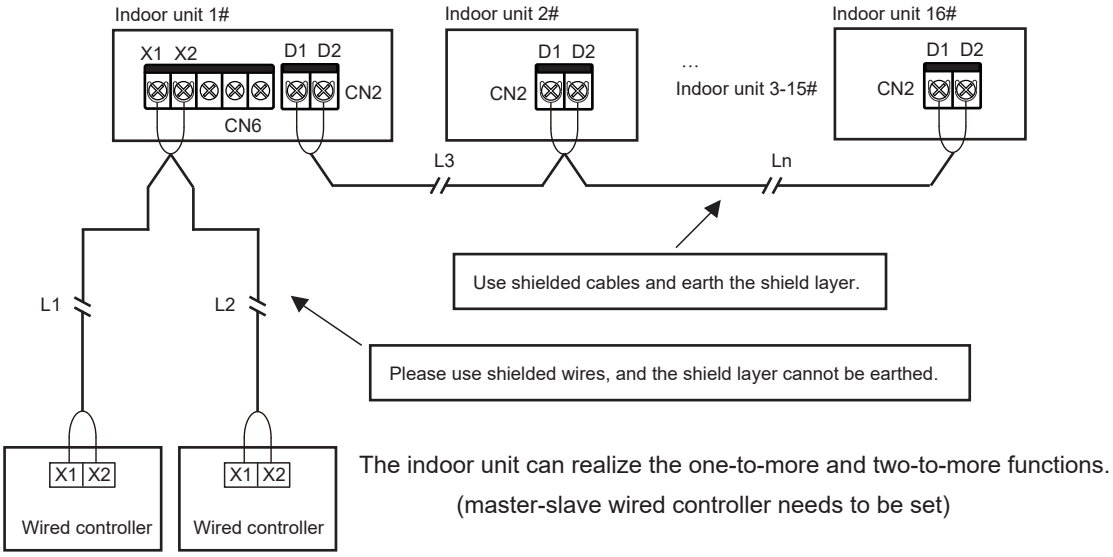

The indoor unit can realize the one-to-more and two-to-more functions.
(master-slave wired controller needs to be set)

L1+L2 ≤ 200m, L3+Ln ≤ 1200m

⚠ CAUTION

When the indoor units in the same refrigerant system are V8 indoor units, D1D2 communication can enable one-to-multiple and two-to-multiple functions of the indoor unit wired controller.

To enable two-to-multiple functions, wired controllers must be of the same model.

B Achieving centralized control of the indoor unit through D1D2 communication

The D1D2 communication wiring can also be connected to the centralized controller to achieve centralized control of the indoor unit, as shown in the figure below:

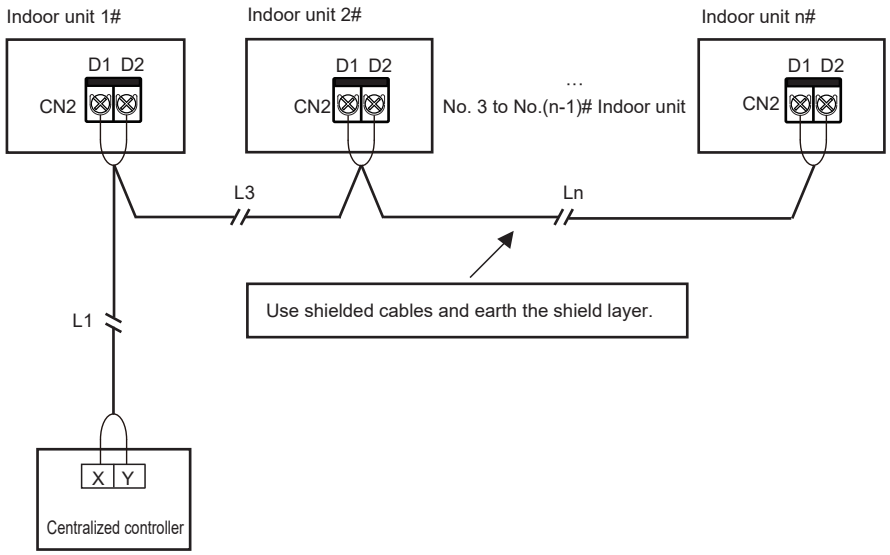

L1+L3+Ln ≤ 1200m

5 External boards connection (limited to outdoor unit and system configuration)

The external boards are connection module outside the main control board, including a display box, Switch module, 1# Expansion board and 2# Expansion board.

① Connection of Display Box

The display box is connected to the main control board through a 4-core cable, and is connected to the "CN30" socket of the main control board, as shown in the following figure:

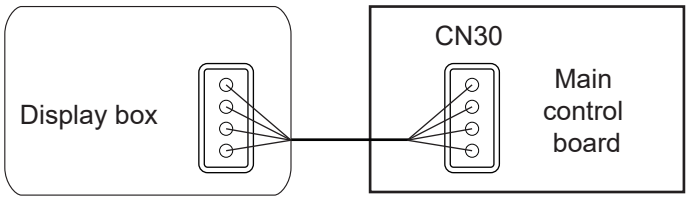

② Switch module connection

Expansion boards can communicate with the main control board through the Switch board. Use one or both of the two expansion boards.The wiring figures are as follows:

Use 1# Expansion board

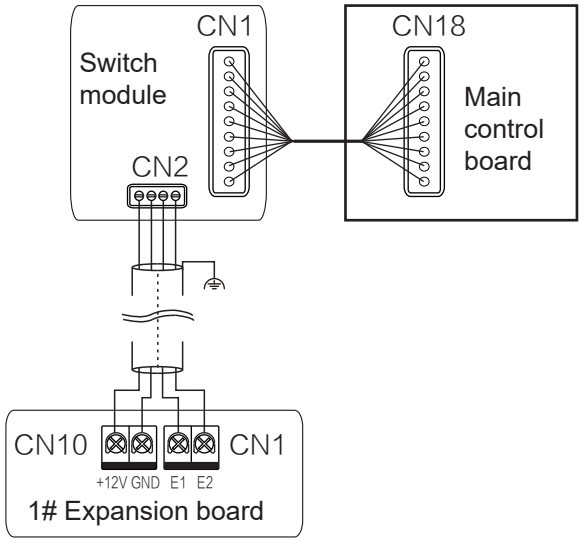

Use 2# Expansion board

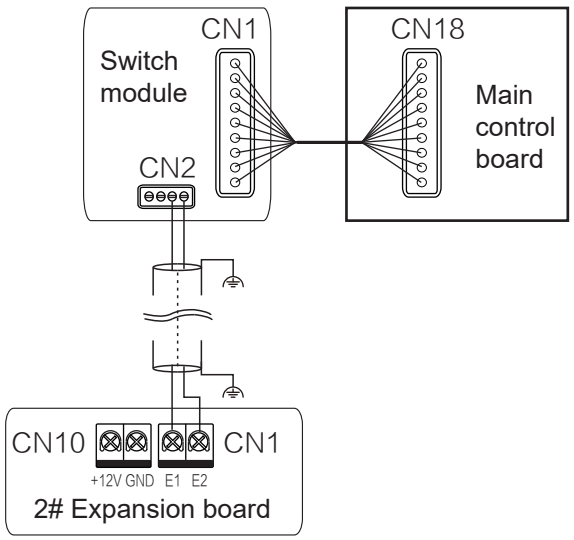

Use 1# and 2# Expansion boards

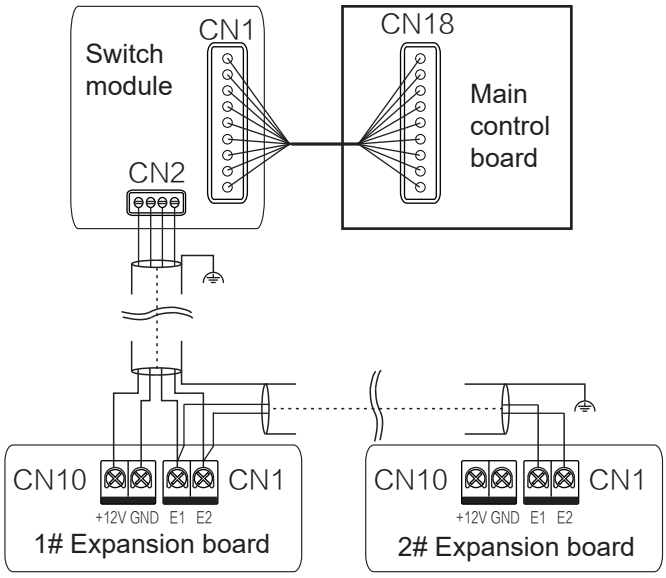

NOTE

For the function introduction of the Switch module, 1# Expansion boards and 2# Expansion boards, please refer to the function module manual.

6 Alarm signal and Sterilization module

Refer to the following figure for the wiring of alarm signal and Sterilization module.

CAUTION

The output voltage is 220-240V~.

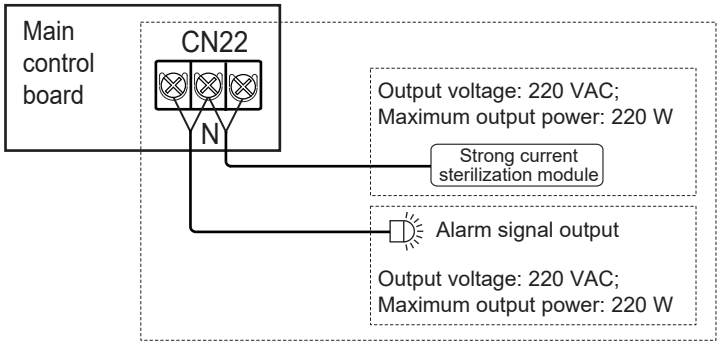

NOTE

The Sterilization function needs to be active by the wired controller, refer to the manual of wired controller for the detail setting.

Other optional in-series equipment may be connected, contact the agent for detail.

7 Remote On/Off control

Refer to the following figure for using Remote On/Off control.

Remote Switch	Air Conditioning System
On	Off
Off	On

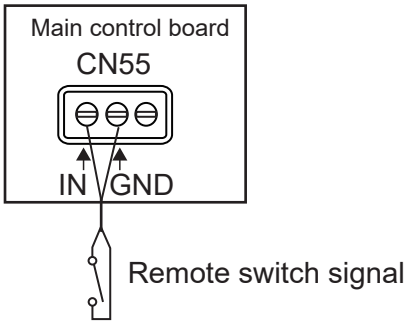

NOTE

The priority of remote control is higher than that of the wired controller.

More remote control functions, such as delayed control, air conditioning system is on when remote control is on, please refer to the manual of wired controller.

8 Reclose the electric control box cover

Straighten out the connecting wires and lay them flat, and close the electric control box cover again.

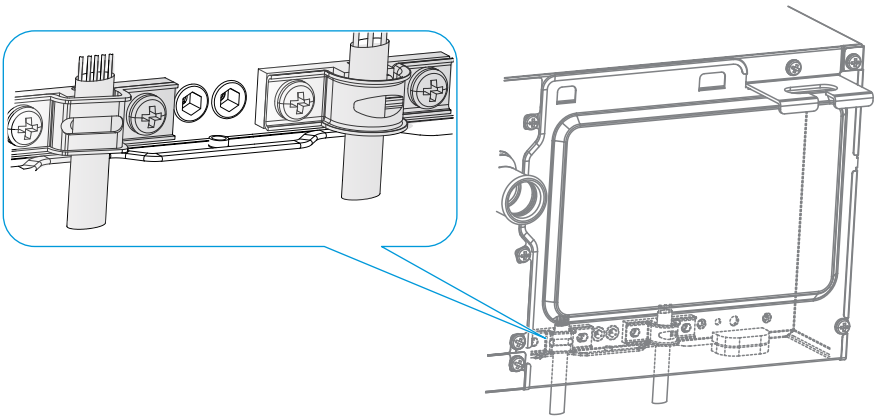

CAUTION

Do not cover the electric control box during power-on.

When covering the electric control box, arrange the cables carefully and do not clip the connecting wires on the electric control box cover.

9 Error Codes

Error Codes And Definitions

The error code is displayed on the display box and the wired controller display.

Definition	Error code	Digital display
Emergency stop	A01	
R32 refrigerant leaks, ⚠ **DANGER** requiring shutdown immediately	A11	
Outdoor unit fault	A51	
Interlocking control Heat Recovery Ventilation Unit fault(in-series application)	A71	
The Humidity Unit fault	A72	
Interlocking control Heat Recovery Ventilation Unit fault（non-serial application)	A73	
The AHU Kit slave unit fault	A74	
Self-check fault	A81	
MS (refrigerant flow direction switching device) fault	A82	
Mode conflict	A91	
1# EEV coil fault	b11	
1# EEV body fault	b12	
2# EEV coil fault	b13	
2# EEV body fault	b14	
Protection on 1# water pump	b34	
Protection on 2# water pump	b35	
Water level switch alarm	b36	
Reheating electric heater fault	b71	
Preprocessing electric heater fault	b72	
Humidifier fault	b81	
Duplicate indoor unit address code	C11	
Abnormal communication between the indoor unit and outdoor unit	C21	

Definition	Error code	Digital display
Abnormal communication between the indoor unit main control board and fan drive board	C41	
Abnormal communication between the indoor unit and wired controller	C51	
Abnormal communication between the indoor unit and Wi-Fi Kit	C52	
Abnormal communication between the indoor unit main control board and display board	C61	
Abnormal communication between the AHU Kit slave unit and master unit	C71	
Number of AHU Kits is not the same as the set number	C72	
Abnormal communication between the linked humidifying indoor unit and master indoor unit	C73	
Abnormal communication between the linked FAPU and master indoor unit (series setting)	C74	
Abnormal communication between the linked FAPU and master indoor unit (non-series setting)	C75	
Abnormal communication between the main wired controller and secondary wired controller	C76	
Abnormal communication between the indoor unit main control board and 1# Expansion board	C77	
Abnormal communication between the indoor unit main control board and 2# Expansion board	C78	
Abnormal communication between the indoor unit main control board and Switch board	C79	
The indoor unit is in power-off state	C81	
Air inlet temperature of the indoor unit is too low in heating mode	d16	
Air inlet temperature of the indoor unit is too high in cooling mode	d17	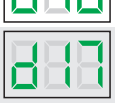
Alarm for exceeding temperature and humidity range	d81	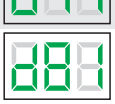
Sensor control board fault	dE1	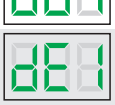
PM2.5 sensor fault	dE2	
CO2 sensor fault	dE3	
Formaldehyde sensor fault	dE4	
Human Detect sensor fault	dE5	
T0 (fresh inlet air temperature sensor) short-circuits or cuts off	E21	
The upper dry bulb temperature sensor short-circuits or cuts off	E22	
The lower dry bulb temperature sensor short-circuits or cuts off	E23	
T1 (Indoor unit return air temperature sensor) short-circuits or cuts off	E24	

Definition	Error code	Digital display
The built-in room temperature sensor of the wired controller short-circuits or cuts off	E31	
The wireless temperature sensor short-circuits or cuts off	E32	
The external room temperature sensor short-circuits or cuts off	E33	
Tcp (pre-cooled fresh air temperature sensor) short-circuits or cuts off	E61	
Tph (pre-heated fresh air temperature sensor) short-circuits or cuts off	E62	
TA (outlet air temperature sensor) short-circuits or cuts off	E81	
Outlet air humidity sensor fault	EA1	
Return air humidity sensor fault	EA2	
Upper wet bulb sensor fault	EA3	
Lower wet bulb sensor fault	EA4	
R32 refrigerant leakage sensor fault	EC1	
T2A (heat exchanger inlet temperature sensor) short-circuits or cuts off	F01	
T2 (heat exchanger middle temperature sensor) short-circuits or cuts off	F11	
T2 (heat exchanger middle temperature sensor) overtemperature protection	F12	
T2B (heat exchanger outlet temperature sensor) short-circuits or cuts off	F21	
Fan drive board input side overcurrent protection	P31	
At least 6 times P31 fault codes detected within 60 minutes	P34	
Power supply voltage is too low fault	P52	
Main control board EEPROM fault	P71	
Indoor unit display control board EEPROM fault	P72	
Locked (electronic lock)	U01	
Unit model code not set	U11	
Capacity(HP) code not set	U12	
Capacity(HP) code setting error	U14	
AHU Kit fan control input signal DIP setting error	U15	
Address code not detected	U38	

Definition	Error code	Digital display
Motor failed more than once	J01	
IPM (fan module) overcurrent protection	J1E	
Instantaneous overcurrent protection for phase current	J11	
Low bus voltage fault	J3E	
High bus voltage fault	J31	
Phase current sample bias error	J43	
Motor and indoor unit are unmatched	J45	
IPM and indoor unit are unmatched	J47	
Motor startup failure	J5E	
Motor blocking protection	J52	
Speed control mode setting error	J55	
Phase lack protection of motor	J6E	

Operating Status Codes And Definitions (Non-error)

Definition	Code	Digital display
Oil return or preheating operation	d0	
Self-cleaning	dC	
Mode conflict	dd	
Defrosting	dF	
Static pressure detection	d51	
Remote shutdown	d61	
Indoor unit backup operation	d71	
outdoor unit backup operation	d72	
Main control program upgrading	OTA	

⚠ CAUTION

Error codes are displayed only for certain outdoor unit models and indoor unit configurations (including the wired controller and display box).

When the main control program is being upgraded, make sure that the indoor unit and outdoor unit remain powered on. Otherwise, the upgrading process will stop.

Spot Check Description

Use the bi-directional communication wired controller (for example, WDC3-86S) to activate the spot check function in the following steps:

① On the main page, hold "☰" and "▲" for 2s to enter the query page. The wired controller displays "CC". Press "▲" or "▼" key to select the indoor unit address n00-n74 (indicating the address of a specific indoor unit), and press the "↗" key to enter the parameter query page.

② Press the "▲" or "▼" key to query the parameters, and the parameters can be queried cyclically. See the spot check list below for details.

③ Press the "🕒" key to exit the query function.

④ On the top of the query page, the "Timing area" displays the spot check serial number, and the "Temperature area" displays the content of the spot check parameters.

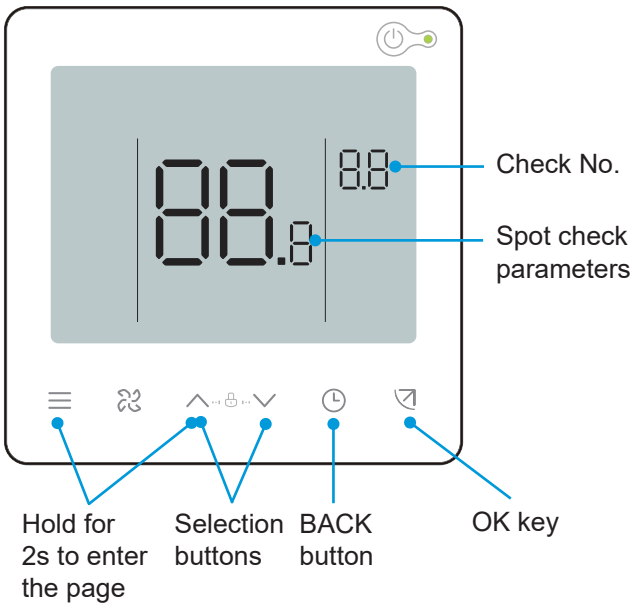

No.	Displayed content	No.	Displayed content
1	Indoor unit address	11	Actual RH indoor humidity
2	Capacity HP of indoor unit	12	Actual fresh air processing unit TA air supply temperature
3	Actual set temperature Ts		
4	Set temperature of the unit that is operating currently, Ts (Remarks: The temperature displayed is the actual set temperature Ts)	13	Air-blow pipe temperature
		14	Compressor discharge temperature
		15	Target superheat
5	Actual T1 indoor temperature	16	EXV opening (actual opening/8)
6	Modified indoor temperature T1_modify	17	Software version No.
7	T2 heat exchanger intermediate temperature	18	Historical error code (recent)
8	T2A heat exchanger liquid pipe temperature	19	Historical error code (sub-recent)
9	T2B heat exchanger gas pipe temperature	20	Fan drive version No.
10	Actual set humidity RHs	21	[———] is displayed

10 Settings

ESP Setting

Use the bi-directional communication wired controller (for example, WDC3-86S) to set the unit external static pressure, which can be divided into the following two situations:

1 Constant air flow mode

Indoor units that are equipped with a constant air flow function are set to the constant air flow mode when they leave the factory. After the units are installed, they should undergo initial static pressure test before use. The steps are as follows:

① On the main page, hold " ☰ " and " ⏎ " for 3s. The wired controller displays "CC". Press the "▲" or "▼" key to select the indoor unit address n00-n63 (indicating the address of a specific indoor unit), and press the " ⏎ " key to enter the parameter setting page. The wired controller displays "n00".

② On the parameter setting page, press the "▲" and "▼" keys to switch the "Parameter code" to the initial static pressure detection code "n58", press " ⏎ " key to enter the specific parameter setting, and then press "▲" and "▼" to set the parameter value to "01". Then, press the " ⏎ " key to save the settings. Then the wired controller will send the initial static pressure detection command to indoor units. Wait a few minutes for the indoor unit to complete the initial static pressure detection.

③ Press " 🕒 " to return to the previous page until exiting the parameter settings or perform no operations for 60s and the system will automatically exit the parameter settings.

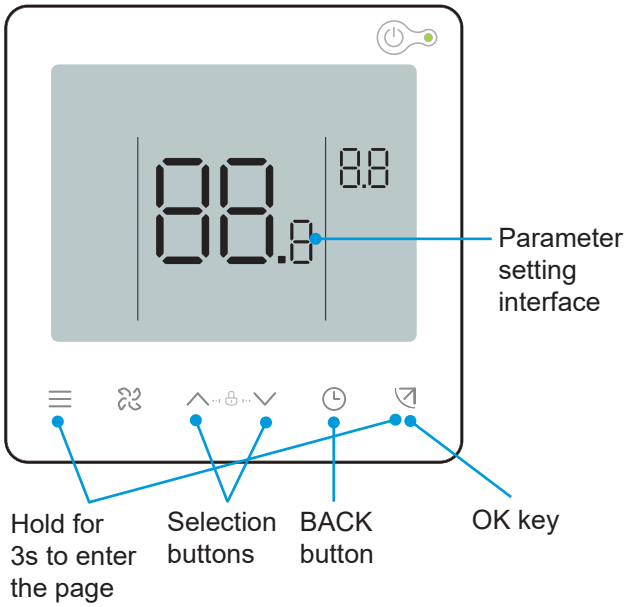

Parameter code	Parameter name	Parameter range	Default value	Remarks
n58	Initial static pressure detection	00/01	00	00: Not reset; 01: Reset

Air Pressure Curve

Constant air flow - self-adaptive

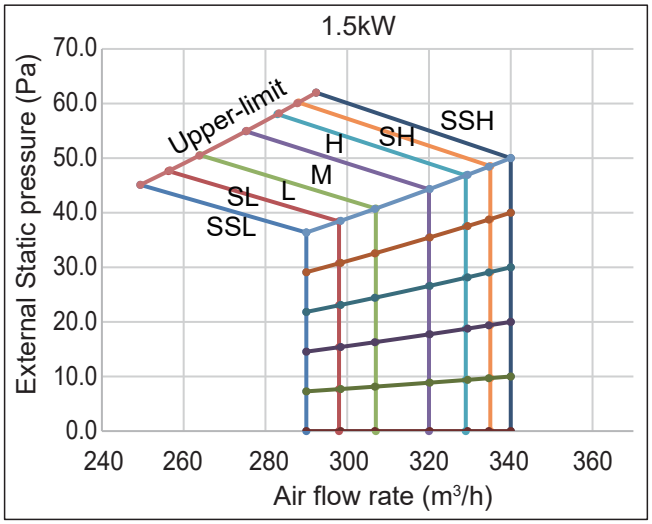

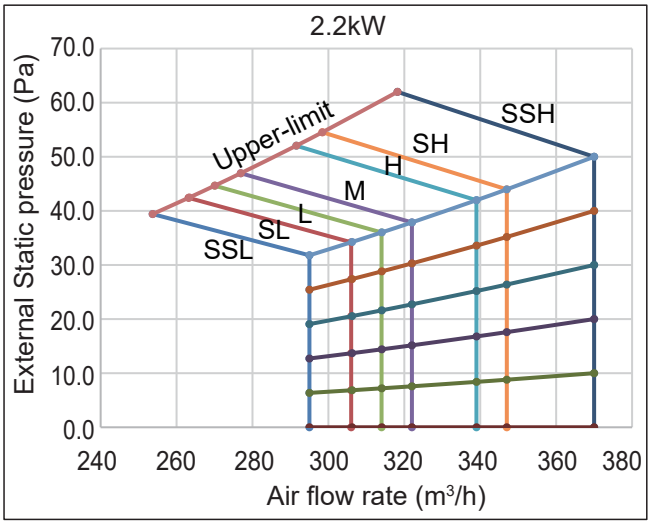

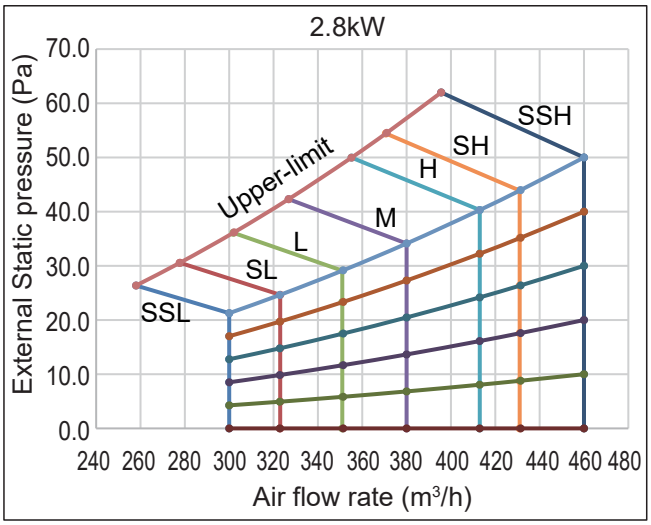

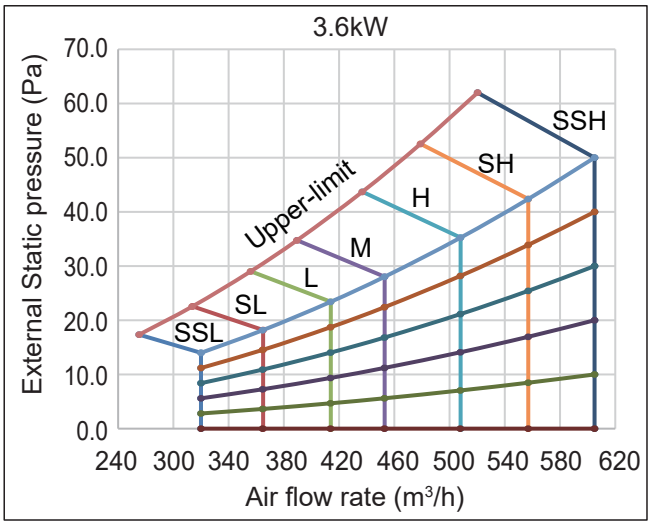

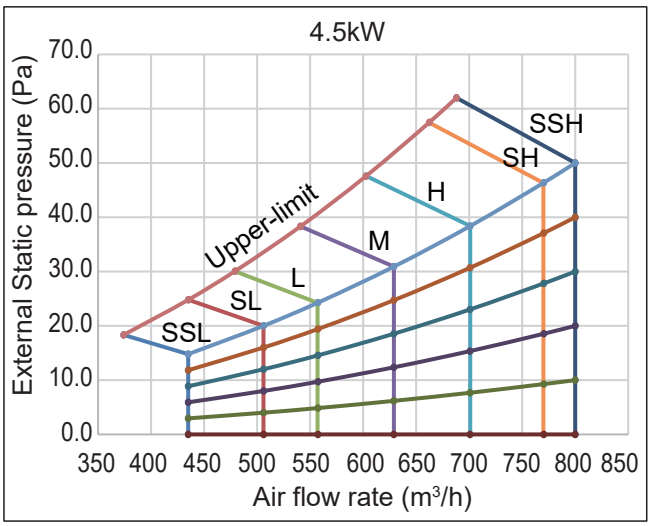

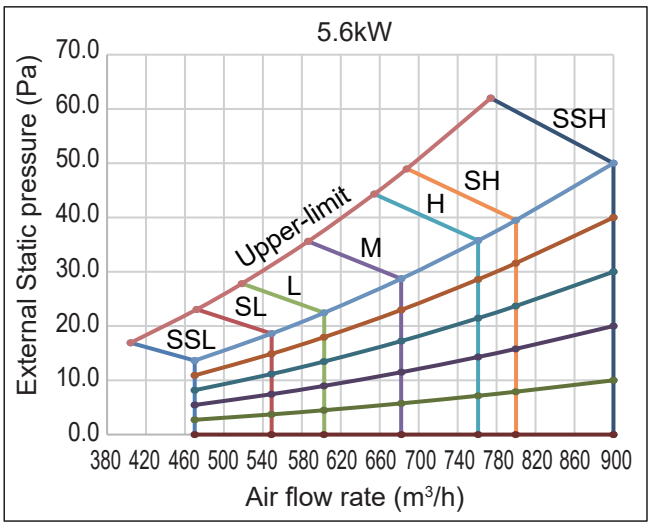

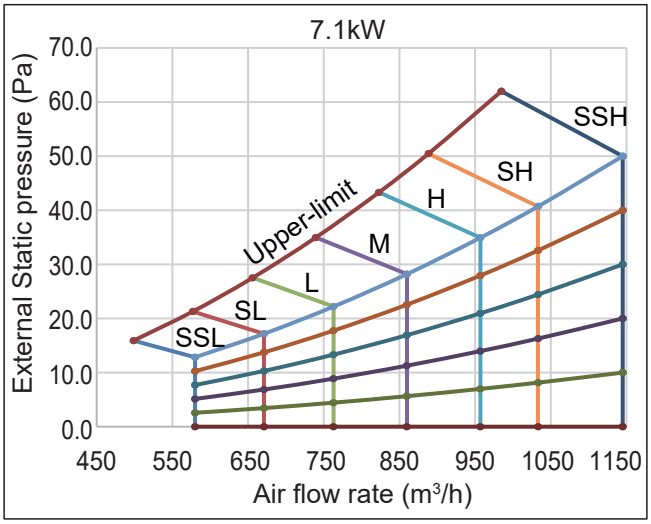

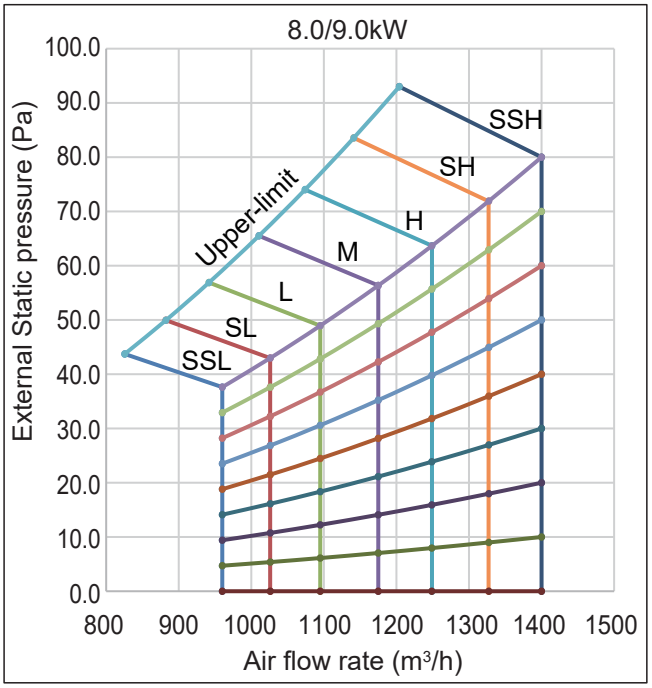

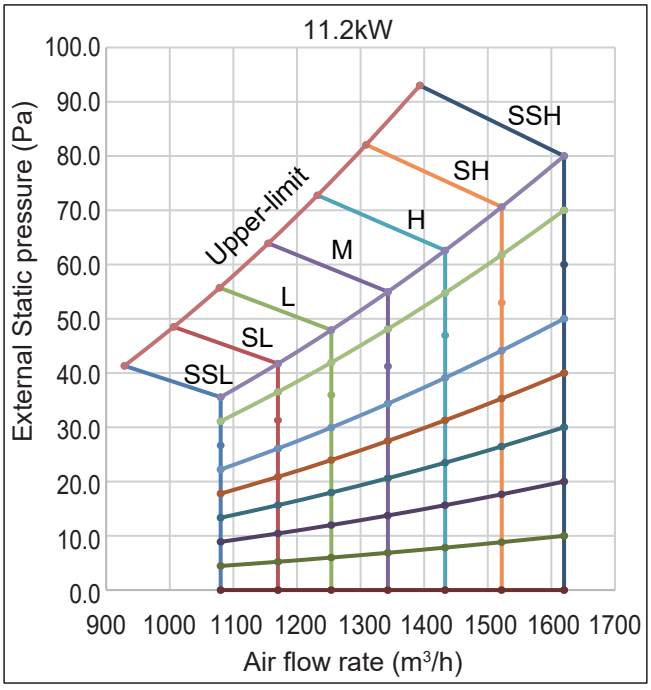

⚠ CAUTION

The static pressure of the air duct should be taken into consideration when installing the unit. This model is not recommended if exceeding the specified static pressure range.

SSL, SL, L, M, H, SH, and SSH represent fan speeds from level 1 to level 7.

2 Constant speed mode

The bi-directional communication wired controller must be used to set the unit's external static pressure parameters to overcome the air outlet resistance. The steps are as follows:

① On the main page, hold " ☰ " and " ⧉ " for 3s. The wired controller displays "CC". Press the "▲" or "▼" key to select the indoor unit address n00-n63 (indicating the address of a specific indoor unit), and press the " ⧉ " key to enter the parameter setting page. The wired controller displays "n00".

② On the parameter setting page, the wired controller displays "n00". Press the " ⧉ " key to enter the specific parameter setting, and then press "▲" and "▼" to adjust the parameter value of the unit external static pressure. Then, press the " ⧉ " key to save the parameters. The unit external static pressure parameter has now been set.

③ Press " ◷ " to return to the previous page until exiting the parameter settings or perform no operations for 60s and the system will automatically exit the parameter settings.

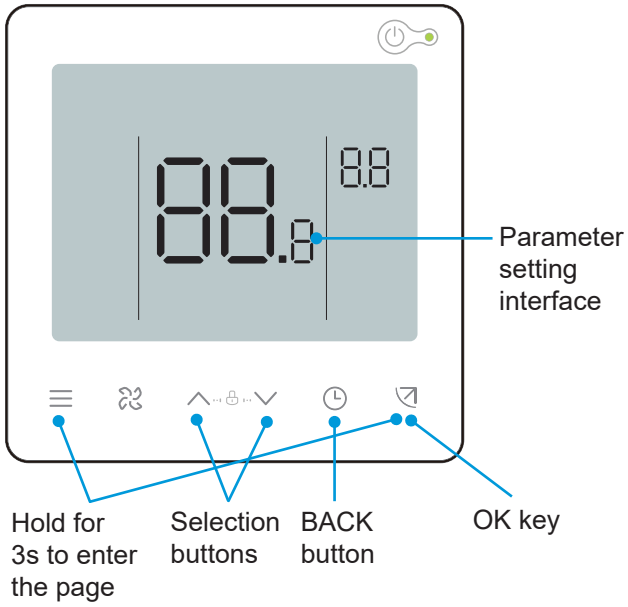

Parameter code	Parameter name	Parameter range	Default value	Remarks
n00	Unit external static pressure	Unit external static pressure stop: 01/02/03/04/05/~/19	1.5-7.1kW: 00 8.0-11.2kW: 01	Set the corresponding static pressure value FF of the indoor unit according to the indoor unit speed

Static pressure setting parameter table

Unit power	Static pressure settings							
W*100	Level 0	Level 1	Level 2	Level 3	Level 4	Level 5	Level 6	Level 7-19
HP	Pa	Pa	Pa	Pa	Pa	Pa	Pa	Pa
1.5 (0.6HP)	10	20	30	40	50	50	50	50
2.2 (0.8HP)	10	20	30	40	50	50	50	50
2.8 (1.0HP)	10	20	30	40	50	50	50	50
3.6 (1.2HP)	10	20	30	40	50	50	50	50
4.5 (1.7HP)	10	20	30	40	50	50	50	50
5.6 (2.0HP)	10	20	30	40	50	50	50	50
7.1 (2.5HP)	10	20	30	40	50	50	50	50
8.0 (3.0HP)	10	20	30	40	50	60	70	80
9.0 (3.2HP)	10	20	30	40	50	60	70	80
11.2 (4.0HP)	10	20	30	40	50	60	70	80

Air Pressure Curve

Constant speed

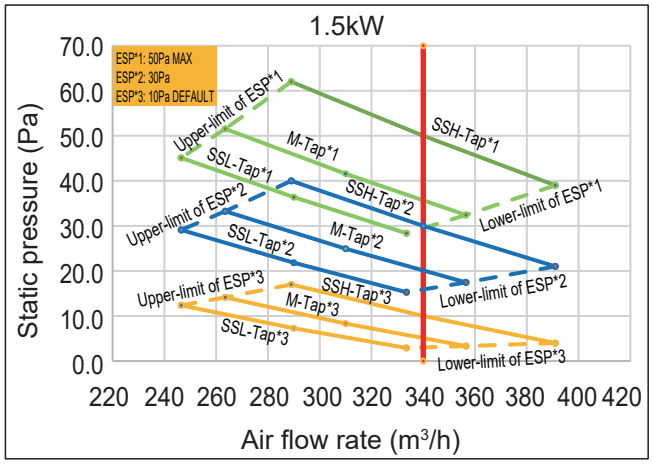

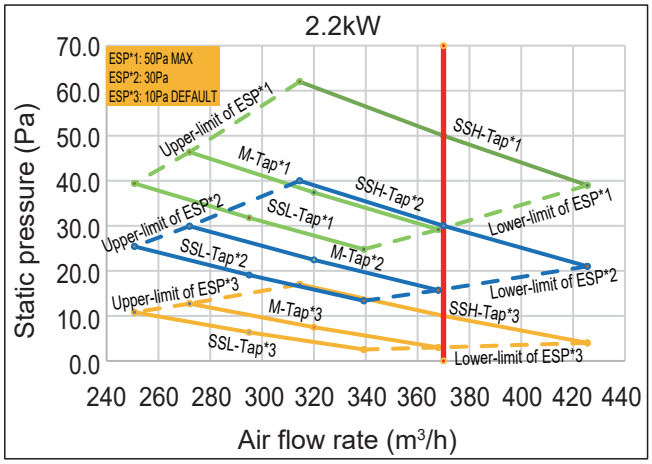

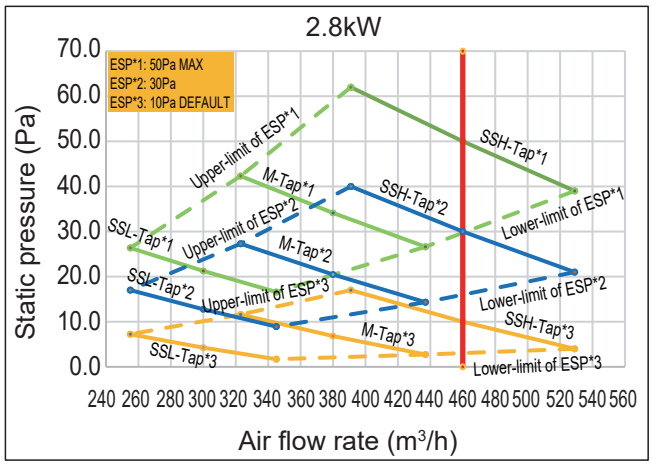

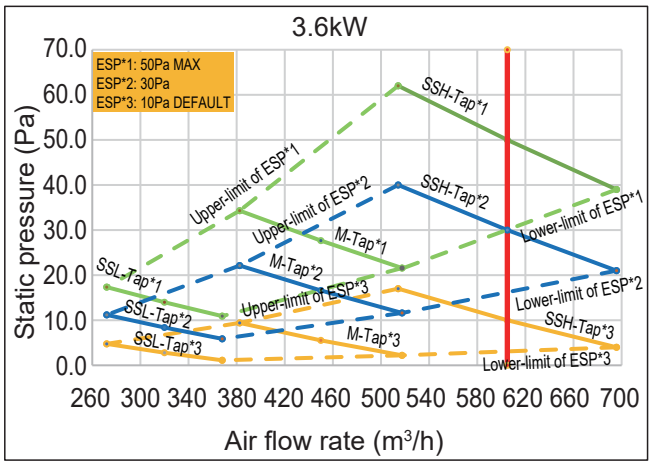

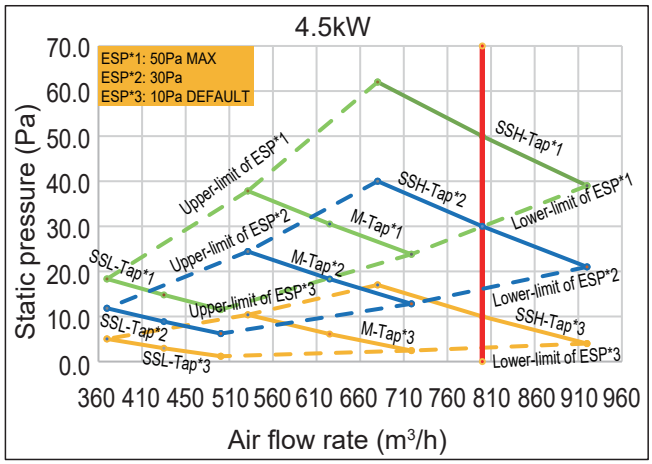

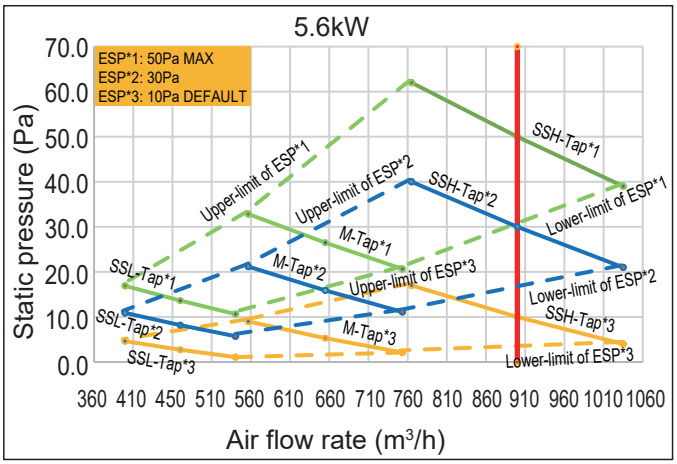

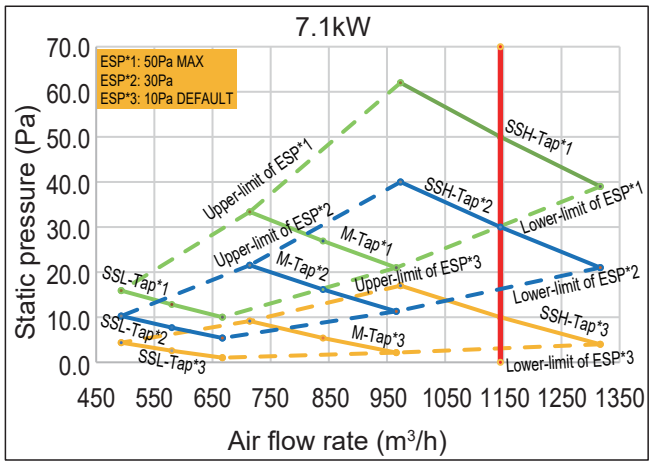

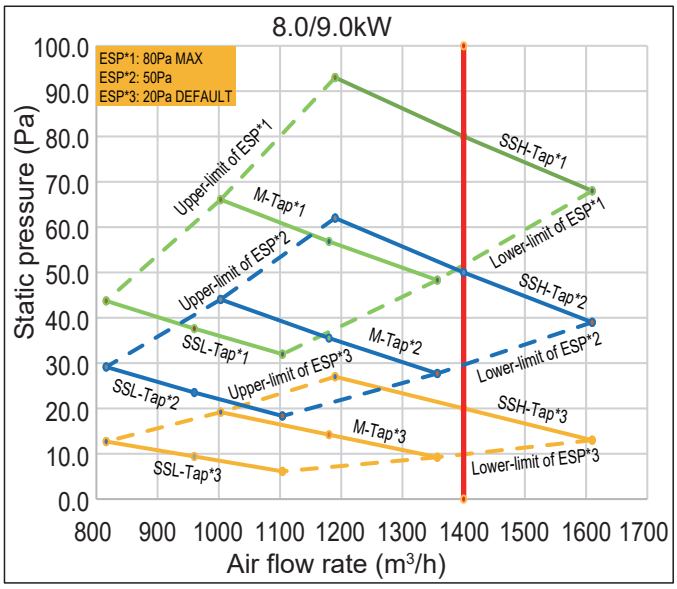

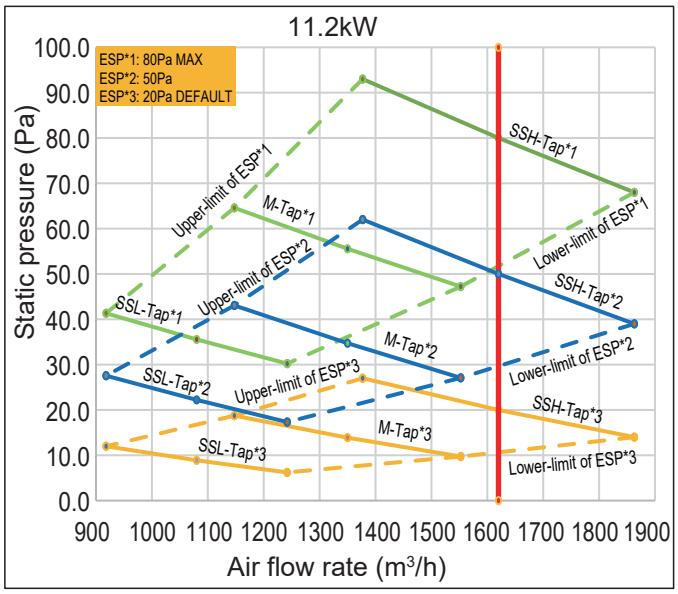

3 Switch between constant air flow and constant speed

The two operating modes are switched as follows:

① On the main page, hold "☰" and "↗" for 3s. The wired controller displays "CC". Press the "▲" or "▼" key to select the indoor unit address n00-n63 (indicating the address of a specific indoor unit), and press the "↗" key to enter the parameter setting page. The wired controller displays "n00".

② On the parameter setting page, press the "▲" and "▼" keys to switch the "Parameter code" to the constant air flow setting parameter code "n30", press the "↗" key to enter the specific parameter setting, and then press "▲" and "▼" to adjust the parameter value of the operating mode. Then, press the "↗" key to save the parameters. The operating mode parameter has now been set.

③ Press "🕒" to return to the previous page until exiting the parameter settings or perform no operations for 60s and the system will automatically exit the parameter settings.

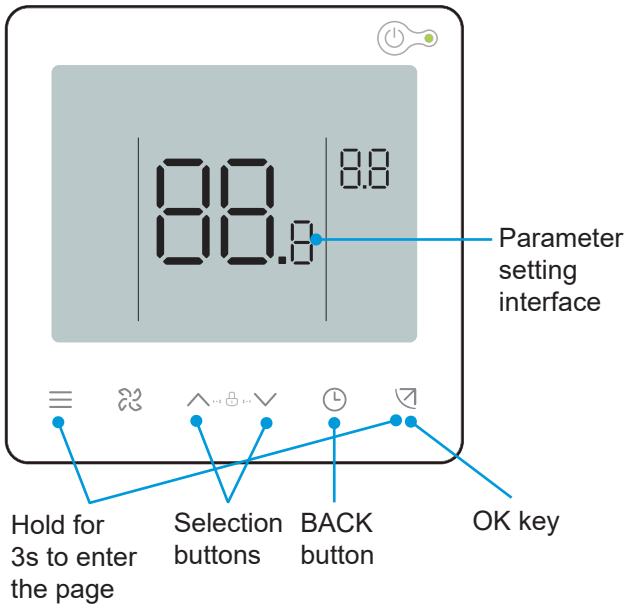

Parameter code	Parameter name	Parameter range	Default value	Remarks
n30	Constant air flow setting	00/01	01	00: Constant speed; 01: Constant air flow

NOTE

Parameters can be set while the unit is powered on or powered off.

On the parameter setting page, the wired controller does not respond to a remote signal, and does not respond to the app remote control signal.

When it is in the parameter settings page, the mode, fan speed, and switch buttons are invalid.

Please refer to the remote controller manual for the setting parameters of the remote controller.

For other indoor unit parameter settings, please refer to the manual of the wired controller.

11 Test Run

Checklist Before Test Run

After the installation of the unit, check the items listed below first.

CAUTION

Do not power on the system.

Pass/Fail	Check list
	Read the complete installation and operation manual.
	Installation Check that the units are properly installed, to avoid abnormal noises and vibrations when starting up the units.
	Compressor and others shipping brackets removed.
	'The Piping Length' and 'Additional Refrigerant Charge' are calculated and recorded on the table of the unit.
	Be sure that the stop valves are open on both liquid and gas side.
	All Controllers installed and all control wiring is installed and properly connected at each terminal block.
	All drain piping is connected, including indoor units tie-in, and insulated as required.
	Refrigerant lines are completely insulated including flare nut connections at Indoor Units.
	All ductwork is connected and air filters installed.
	Air inlet/outlet Check that the air inlet and outlet of the unit is not obstructed by paper sheets, cardboard, or any other material.
	Field wiring Be sure that the field wiring has been carried out according to the instructions described in the manual and according to the applicable legislation.
	Earth wiring Be sure that the earth wires have been connected properly and that the earth terminals are tightened.
	Insulation test of the main power circuit Using a megatester for 500 V, check that the insulation resistance of 2 MΩ or more is attained by applying a voltage of 500 V DC between power terminals and earth. NEVER use the megatester for the communication wiring.

Pass/Fail	Check list
	Fuses, circuit breakers, or protection devices Check that the fuses, circuit breakers, or the locally installed protection devices are of the specified size and type. Do not bypass a fuse and a protection device.
	Internal wiring Visually check the electrical component box and the inside of the unit for loose connections or damaged electrical components.
	Components damage Check for damaged components and extruded piping inside the unit. Consistency Check between Refrigeration Pipelines and Communication Lines Check and confirm that the refrigerant piping and communication lines connected to the indoor and outdoor units are belong to the same refrigeration system.
	Oil leak Check if there is oil leaking from the compressor and piping. If there is an oil leak, try to repair the leak. If the repair is not successful, please call the local agent.
	Refrigerant leak Check for refrigerant leaks inside the unit. If there is a refrigerant leak, try to repair the leak. If the repair is not successful, please call the local agent. Do not come into contact with the refrigerant leaking from the refrigerant piping connections. It may cause frostbite.
	Flammable refrigerant. If there is a refrigerant leak, keep ventilation to avoid the risk of refrigerant stagnating. If a leak is suspected, all naked flames shall be removed/extinguished. If a leakage of refrigerant is found which requires brazing, all of the refrigerant shall be recovered from the system, or isolated (by means of shut off valves) in a part of the system remote from the leak.
	Line Voltage is checked and verified to be within specified range for all system components.
	Power the outdoor units 12 hours before operation in order to have power running to the crankcase heater and to protect the compressor.

Indoor Unit

- The wired/remote controller switch is operating normally.
- The display of the wired/remote controller is normal, the function keys work normally, the room temperature adjustment is normal, and the air flow and direction adjustment are normal.
- The LED indicator is on.
- Water drainage is normal.
- Check the indoor units one by one for normal operation, and the cooling and heating functions are normal without vibration or abnormal sound.

Outdoor Unit

- There are no vibrations or strange sounds during operation.
- The fan, noise and condensation do not affect the neighbors.
- There is no refrigerant leakage.

NOTE

Refer to the "Symptoms That Are Not Faults" in the "Operation" in this manual.

Maintenance And Service

1 Safety Warning

⚠ WARNING

For safety reasons, always turn off the air conditioner and turn off the power before cleaning the air conditioner.

Do not disassemble or repair the air conditioner by yourself; otherwise, it may cause fire or other hazards.

Only professional service personnel can carry out the maintenance.

Do not use flammable or explosive materials (such as hair styling agents or pesticides) near the product.

Do not use organic solvents such as paint thinner to clean this product; otherwise, it may cause cracks, electric shock or fire.

Only qualified dealers and professionally qualified electricians can install the optional accessories.

Be sure to use the optional accessories specified by local dealer.

Improper installation by yourself may result in water leakage, electric shock or fire.

Do not wash the air conditioner with water; otherwise, it may cause an electric shock.

Use a stable standing platform.

2 Cleaning

Cleaning The Air Filter

⚠ CAUTION

Air filters can be used to remove dust or other particles from the air, and if clogged, the effectiveness of the air conditioner will be greatly reduced.
Therefore, be sure to clean the air filter frequently when using it for an extended period.

For the indoor unit with constant speed mode, if it is installed in a place with a lot of dust, it is recommended that you clean the filter once a month. For indoor units with a constant air flow mode, clean the filter when you receive the reminder of the wired controller.

If excess dirt makes the filter difficult to clean, replace the filter.

Do not remove the air filter unless it is being cleaned; otherwise, it may cause malfunction.

1 Procedure

① Remove the air inlet grille.

For duct type air conditioners, open the air inlet grille as shown in the figure.

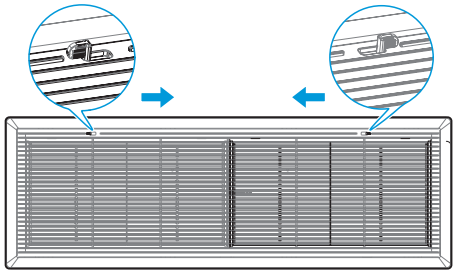

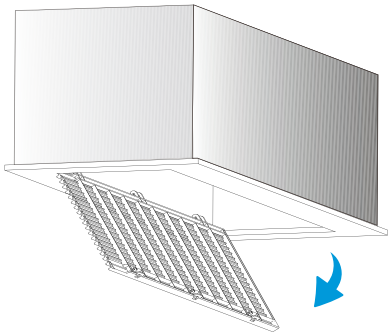

② Remove the filter.

NOTE

Only authorised installer or service agent can change and disassemble the filter. Any improper operations may cause electric shock or injuries due to touching rotating parts.

③ Clean the filter.

Clean the filter with a vacuum cleaner, with the air inlet side of the filter facing upwards.

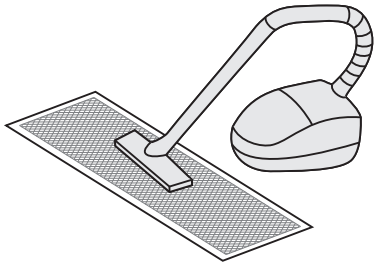

Clean the filter with clean water (except for the activated carbon module), with the air inlet side of the filter facing downwards.

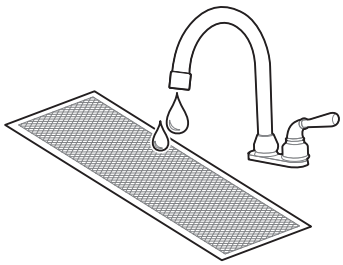

CAUTION

To avoid deformation of the filter, do not use fire or a burning appliance to dry the filter.

If the filter is dirty, use a soft brush and neutral detergent to clean it, then shake off the water and dry it in a cool place.

Non-professionals should not disassemble, replace or repair the filter.

④ Reinstall the filter.

⑤ Reinstall and close the air inlet grille by following steps 1 and 2 above in reverse.

Cleaning Air Outlets And Exterior Panels

① Wipe the air outlet and panel with a dry cloth.

② If a stain is hard to remove, clean it with clean water or neutral detergent.

⚠ CAUTION

Do not use gasoline, benzene, volatile agents, decontamination powder or liquid insecticides. Otherwise, the air outlet or panel may become discolored or deformed.

Do not expose the inside of the indoor unit to moisture, as it may result in electric shock or fire.

When cleaning the louver with water, do not scrub it violently.

If the air conditioner is used without an air filter, the accumulation of dust in the air conditioner will often cause malfunctions due to the failure to remove dust from the indoor air.

Maintenance

During in-depth maintenance, the air conditioner should be cleaned and maintained by professional technicians every 2 to 3 years.

For the indoor unit in constant speed mode, the primary efficiency filter is usually cleaned every three months.

When operating in a dusty environment, the air flow and capacity of the filter will decrease. The filter may even become blocked, and the air conditioner performance and indoor air compromised.

Preheat the unit in advance.

When the heating season comes, power on the outdoor unit master unit for preheating more than 12 hours before use. The preheating time depends on the weather temperature. This can make the air conditioner operate more stably and help the refrigeration oil in the air conditioner compressor to maintain the best lubrication state, which can prolong the service life of the compressor.

Complete the following steps before the air conditioner is put out of use for a long period:

① If the air conditioner is not in use for a long time due to seasonal changes, keep the unit running for 4-5 hours in fan mode until the unit becomes completely dry. Otherwise, it may grow mold indoors and have negative health effects.

② When not in use for a long time, power off or unplug the power plug to reduce standby power consumption, and wipe the wireless remote controller with a clean soft dry cloth and remove the battery.

③ Turn on the power switch 12 hours before using the air conditioner again. In addition, in seasons when air conditioners are frequently used, keep the power switch on. Otherwise, failures may occur.

⚠ CAUTION

Before the air conditioner is idle for a long time, the internal components of the outdoor units should be checked and cleaned regularly. For more details, please contact the local air conditioner customer service center or special technical service department.

Check the return air inlet and outlet of the outdoor unit and indoor unit after long periods of use to see if they are blocked; if an inlet/outlet is blocked, clean it immediately.

Wooden buildings , newly renovated houses, and frequent use of disinfectants may contain acidic components in the air, such as formic acid, acetic acid, and hypochlorous acid, which can corrode copper pipes and solder joints, leading to refrigerant leaks.

Factories, chemical plants, livestock farms, vegetable markets, sewage pits, and other environments may contain sulfides, acid gases such as sulfur dioxide, ammonia, and chlorides in the air, which can corrode copper pipes and solder joints, leading to refrigerant leaks.

These places may cause corrosion to the copper pipes and joints of the indoor unit, and it is necessary to have a professional inspection every six months.

3 Service

Step To Dismantle The Heat Exchanger And Drain Pan

The drain pan must first be removed during the maintenance of the internal parts. Dismantle the drain pan according to the following figures (Make sure there is no residual water in the drain pan before dismantle it).

1 Dismantle the cover plate assembly

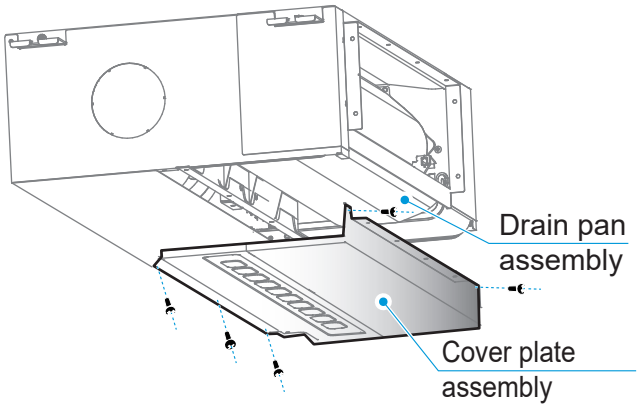

2 Rotate the drain pan assembly by 30 to 45 degrees around the drain pan's front edge

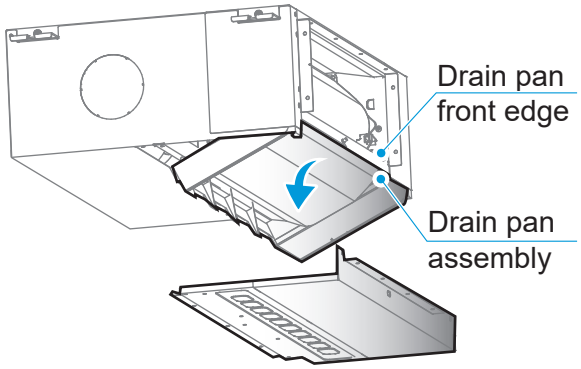

3 Shift the drain pan assembly to the left by more than 30mm

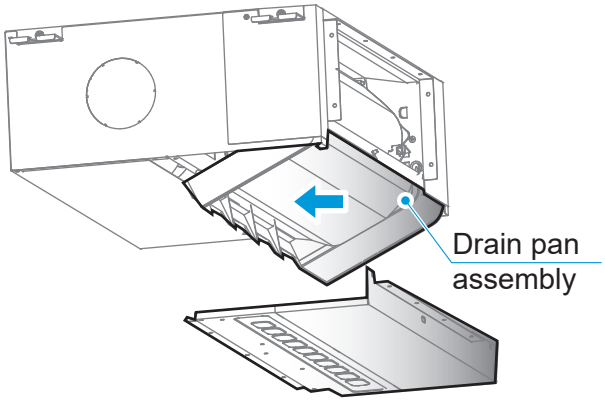

4 Shift the drain pan downwards until the drain pan is removed from the unit body

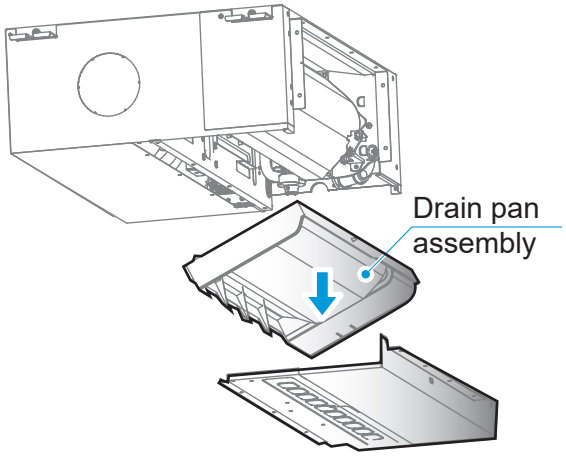

Step To Dismantle The Fan Casing And Its Parts

1 Remove the return air cover
(The bottom air return model is taken as an example here. First, remove the filter, if there is one.)

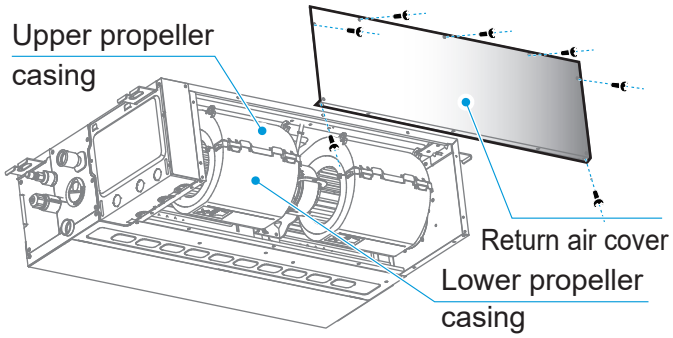

2 Press the buckle of the upper propeller casing, and rotate the lower propeller casing around the front edge of the lower propeller casing by about 30 degrees.

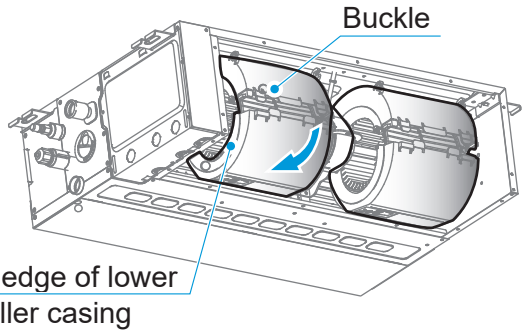

3 Slanting downward, remove the lower propeller casing.

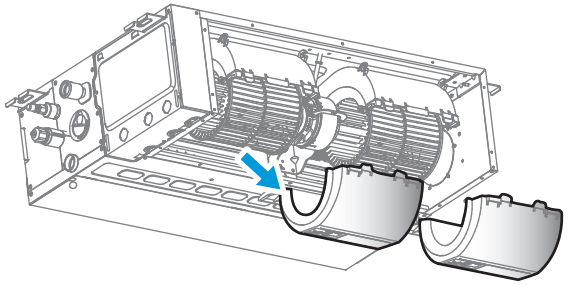

4 Loosen the screws on the upper propeller casing.

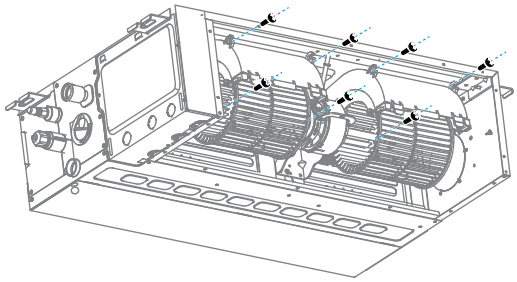

5 Move the upper propeller casing 50mm.

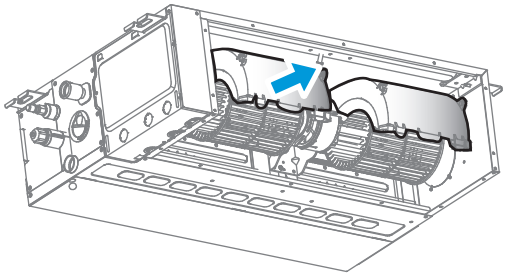

6 Make the propeller casing rotate more than 90° downward along the wind wheel.

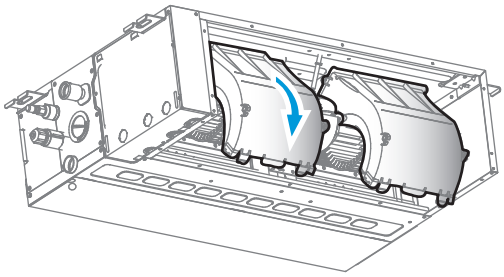

7 Slanting downward, remove the upper propeller casing.

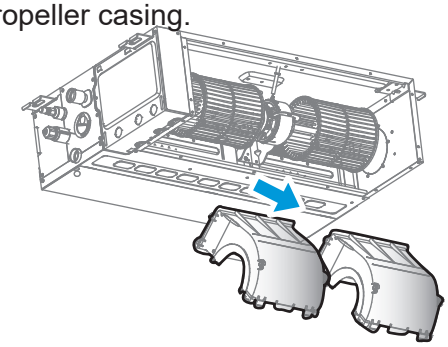

8 Loosen the fastening screws for the motor sealing plate.

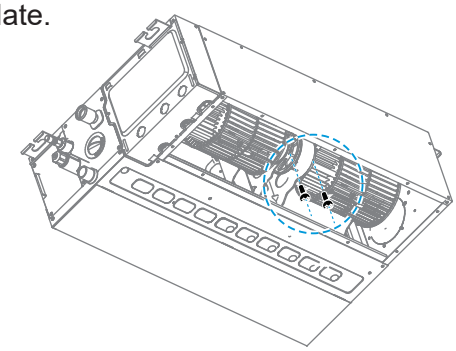

9 Remove the motor and wind wheel together; unscrew the screws securing the wind wheel in place and remove the wind wheel and motor.

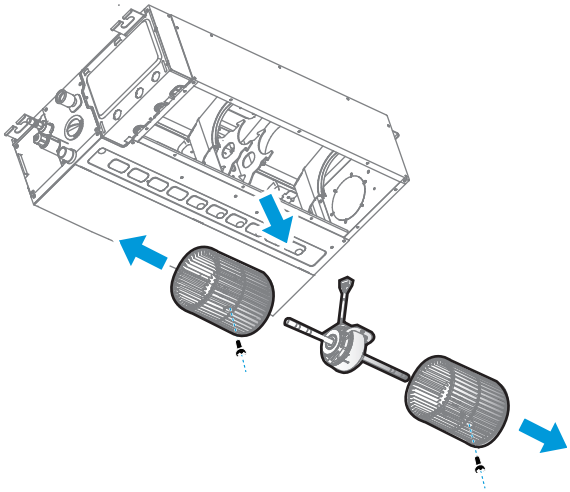

Note: Installation notes are as follows: The slot and latch bolt, and the limiting groove and side wall edge should be aligned first, and then be fastened; Check whether the limiting groove, positioning rod and buckle are installed in place, and the limiting latch bolt shall enclose the outside of the propeller casing.

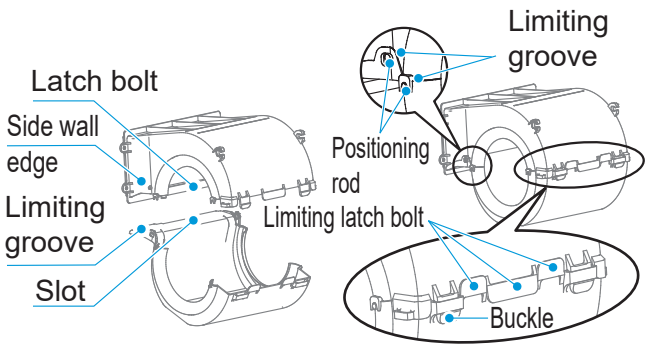

NOTE

The first step of the rear air return model maintenance is to remove the return air cover in a downward direction. The other steps should be consistent.

Step To Dismantle The Drain Pump

1. Remove the screws on the water pump cover and pipe clamp board, and then remove the pipe clamp board, as shown in Figure A.
2. Unplug the pump and water level switch power supply.
3. Replace the drain pump assembly.

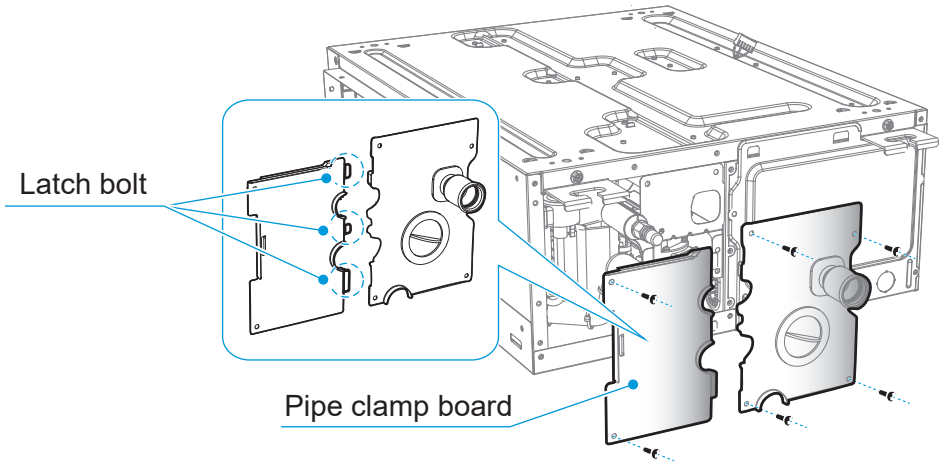

Figure A

NOTE

During assembly, the latch bolt of the pipe clamp board shall be snapped into the bottom of the water pump cover.

Step To Dismantle The Electronic Expansion Valve And Temperature Sensor

1. Remove the screws on the water pump cover and pipe clamp board, and then remove the pipe clamp board, as shown in Figure A.
2. Unplug the water pump and water level switch power supply and remove the water pump assembly.
3. Replace the temperature sensor and electronic expansion valve.

Step To Dismantle The Main Control Board

1. Remove the screws on the cover of electric control box.
2. Check the circuit, components and other problems or replace the main control board.
3. After replacing the main control board, use the after-sale tool to scan the QR code on the electric control box, and reset the parameter.

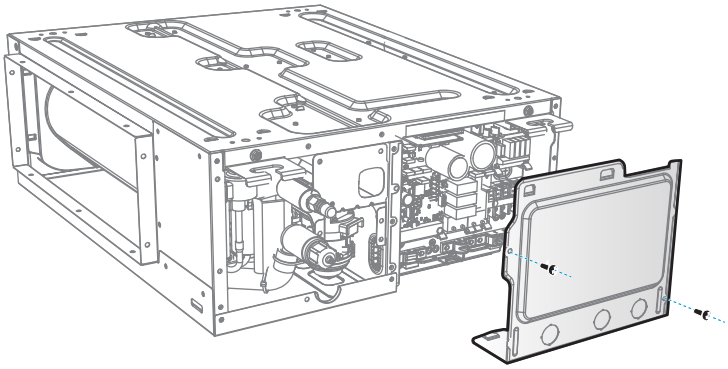

NOTE

The electric control boards of different indoor units are not interchangeable.

Step To Dismantle The Motor Shaft And Coupling (Model With 3 Fans)

1 The following example will refer to the air return model. Remove the two screws under the return air cover. First, remove the filter if any.

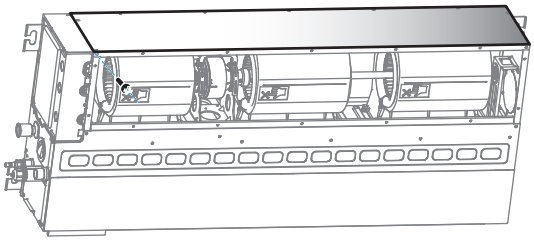

2 Refer to the previous procedure of propeller casing to remove the lower propeller casing located at the side with a coupling and loosen the fastening screws on the coupling.

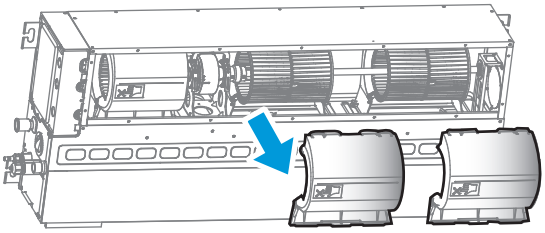

3 Push the coupling toward the wind wheel.

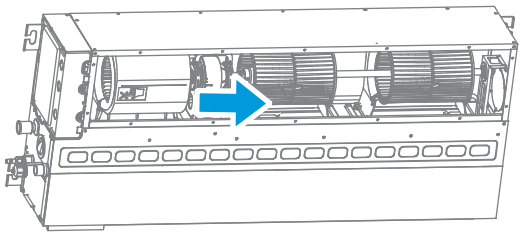

4 Remove the wind wheel, connecting shaft and coupling together.

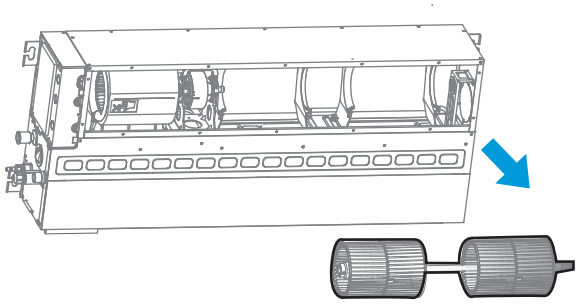

5 Loosen the fastening screws for the wind wheel and remove the coupling and motor shaft.

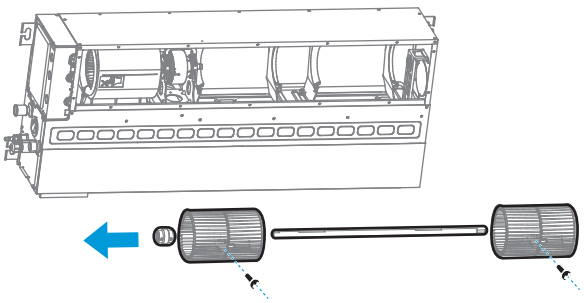

Step To Dismantle The Bearing Block (Model With 3 Or 4 Fans)

1 The bottom air return model is used as an example here. First, remove the filter if any. Remove the two screws below the return air cover.

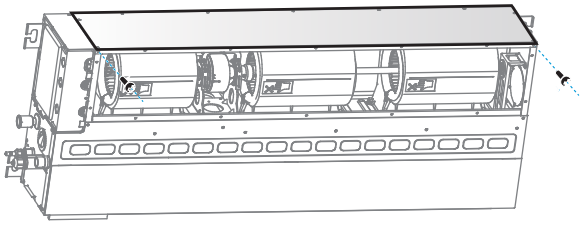

2 Refer to the maintenance procedure of the propeller casing to remove the lower propeller casing near the bearing block.

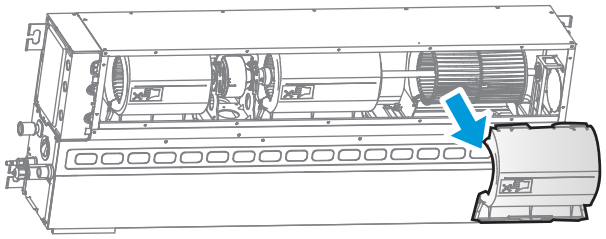

3 Use a tool to eject the bearing block to the right and remove it.
Or, refer to the disassembly procedure of motor shaft and coupling, first remove the motor shaft, and then remove the bearing block.

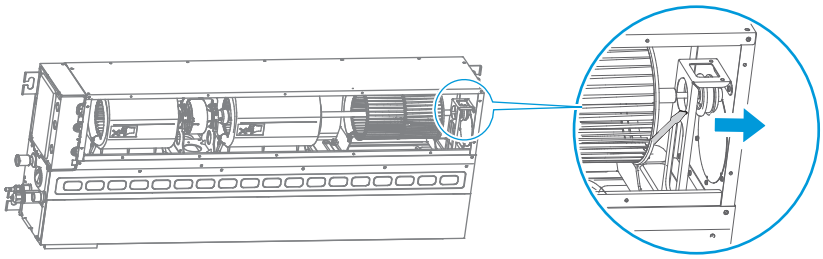

Multi-languages

161260000007127 V.F

技术要求，此页不做菲林
封面封底为铜版纸105g ，内页为双胶纸80g
210*297mm，黑白印刷
A-B
修订为英文版说明书
B-C
更新排版，增加认证要求
C-D
整本说明书重新翻译

D-E
整本修改

E-F
封底更新二维码