

HIGH STATIC PRESSURE DUCT TYPE AIR CONDITIONER

USER MANUAL

MODEL NUMBER:
DUCMI105IHB
DUCMI125IHB
DUCMI140IHB

Warning notices: Before using this product, please read this manual carefully and keep it for future reference.
The design and specifications are subject to change without prior notice for product improvement.
Consult with your dealer or manufacturer for details.
The diagram above is just for reference. Please take the appearance of the actual product as the standard.

THANK YOU LETTER

Thank you for choosing Midea! Before using your new Midea product, please read this manual thoroughly to ensure that you know how to operate the features and functions that your new appliance offers in a safe way.

CONTENTS

THANK YOU LETTER 01

SAFETY PRECAUTIONS 02

SPECIFICATIONS 06

PRODUCT OVERVIEW 07

PRODUCT INSTALLATION 08

Install Your Indoor Unit 10

Install Your Outdoor Unit 17

Refrigerant Piping Connection 20

Wiring Precautions 23

Air Evacuation 29

Note on Adding Refrigerant 30

Test Run 31

SPECIFICATIONS AND FEATURES 32

WIRE REMOTE CONTROLLER 35

CARE AND MAINTENANCE 63

TROUBLESHOOTING 64

TRADEMARKS, COPYRIGHTS AND LEGAL STATEMENT 70

DISPOSAL AND RECYCLING 70

DATA PROTECTION NOTICE 71

SAFETY PRECAUTIONS

It’s really important you read Safety Precautions Before Operation and Installation Incorrect installation due to ignoring instructions can cause serious damage or injury. The seriousness of potential damage or injuries is classified as either a WARNING or CAUTION.

Explanation of Symbols

WARNING
The signal word indicates a hazard with a medium level of risk which, if not avoided, may result in death or serious injury.

CAUTION
The signal word indicates a hazard with a low degree of risk which, if not avoided, may result in minor or moderate injury.

Read these operating instructions carefully and attentively before using/commissioning the unit and keep them in the immediate vicinity of the installation site or unit for later use!

⚠ WARNING

This appliance can be used by children aged from 8 years and above and persons with reduced physical, sensory or mental capabilities or lack of experience and knowledge if they have been given supervision or instruction concerning use of the appliance in a safe way and understand the hazards involved. Children shall not play with the appliance. Cleaning and user maintenance shall not be made by children without supervision(European Union countries).

This appliance is not intended for use by persons(including children) with reduced physical, sensory or mental capabilities, or lack of experience and knowledge, unless they have been given supervision or instruction concerning use of the appliance by a person responsible for their safety. Children should be supervised to ensure that they do not play with the appliance.

⚠ WARNING FOR PRODUCT USE

- If an abnormal situation arises (like a burning smell), immediately turn off the unit and disconnect the power. Call your dealer for instructions to avoid electric shock, fire or injury.
- Do not insert fingers, rods or other objects into the air inlet or outlet. This may cause injury, since the fan may be rotating at high speeds.
- Do not use flammable sprays such as hair spray, lacquer or paint near the unit. This may cause fire or combustion.
- Do not operate the air conditioner in places near or around combustible gases. Emitted gas may collect around the unit and cause explosion.
- Do not operate your air conditioner in a wet room such as a bathroom or laundry room. Too much exposure to water can cause electrical components to short circuit.
- Do not expose your body directly to cool air for a prolonged period of time.
- Do not allow children to play with the air conditioner. Children must be supervised around the unit at all times.
- If the air conditioner is used together with burners or other heating devices, thoroughly ventilate the room to avoid oxygen deficiency.
- In certain functional environments, such as kitchens, server rooms, etc., the use of specially designed air-conditioning units is highly recommended.

⚠ ELECTRICAL WARNINGS

- Only use the specified power cord. If the power cord is damaged, it must be replaced by the manufacturer, its service agent or similarly qualified persons in order to avoid a hazard.
- The product must be properly grounded at the time of installation, or electrical shock may occur.
- For all electrical work, follow all local and national wiring standards, regulations, and the Installation Manual. Connect cables tightly, and clamp them securely to prevent external forces from damaging the terminal. Improper electrical connections can overheat and cause fire, and may also cause shock. All electrical connections must be made according to the Electrical Connection Diagram located on the panels of the indoor and outdoor units.
- All wiring must be properly arranged to ensure that the control board cover can close properly. If the control board cover is not closed properly, it can lead to corrosion and cause the connection points on the terminal to heat up, catch fire, or cause electrical shock.
- Disconnection must be incorporated in the fixed wiring in accordance with the wiring rules.
- Do not pull power cord to unplug unit. Hold the plug firmly and pull it from the outlet. Pulling directly on the cord can damage it, which can lead to fire or electric shock.
- Do not modify the length of the power supply cord or use an extension cord to power the unit.
- Do not share the electrical outlet with other appliances. Improper or insufficient power supply can cause fire or electrical shock.
- Keep power plug clean. Remove any dust or grime that accumulates on or around the plug. Dirty plugs can cause fire or electric shock.
- If connecting power to fixed wiring, an all-pole disconnection device which has at least 3mm clearances in all poles, and have a leakage current that may exceed 10mA, the residual current device(RCD) having a rated residual operating current not exceeding 30mA, and disconnection must be incorporated in the fixed wiring ‘ in accordance with the wiring rules.

TAKE NOTE OF FUSE SPECIFICATIONS

The air conditioner's circuit board (PCB) is designed with a fuse to provide overcurrent protection.
The specifications of the fuse are printed on the circuit board ,such as :
T5A/250VAC, T10A/250VAC, etc.
T20A/250VAC(<=24000Btu/h units), T30A/250VAC(>24000Btu/h units)
NOTE: For the units with R32 or R290 refrigerant , only the blast-proof ceramic fuse can be used.

⚠ WARNINGS FOR PRODUCT INSTALLATION

- Installation must be performed by an authorized dealer or specialist. Defective installation can cause water leakage, electrical shock, or fire.
- Installation must be performed according to the installation instructions. **(In North America, installation must be performed in accordance with the requirement of NEC and CEC by authorized personnel only).** Improper installation can cause water leakage, electrical shock, or fire.
- Contact an authorized service technician for repair or maintenance of this unit. This appliance shall be installed in accordance with national wiring regulations.
- Only use the included accessories, parts, and specified parts for installation. Using non-standard parts can cause water leakage, electrical shock, fire, and can cause the unit to fail.
- Install the unit in a firm location that can support the unit's weight. If the chosen location cannot support the unit's weight, or the installation is not done properly, the unit may drop and cause serious injury and damage.
- Install drainage piping according to the instructions in this manual. Improper drainage may cause water damage to your home and property.
- For units that have an auxiliary electric heater, do not install the unit within 1 meter (3 feet) of any combustible materials.
- Do not install the unit in a location that may be exposed to combustible gas leaks. If combustible gas accumulates around the unit, it may cause fire.
- Do not turn on the power until all work has been completed.
- When moving or relocating the air conditioner, consult experienced service technicians for disconnection and reinstallation of the unit.
- How to install the appliance to its support, please read the information for details in "indoor unit installation" and "outdoor unit installation" sections .

⚠ CAUTION

- Turn off the air conditioner and disconnect the power if you are not going to use it for a long time.
- Turn off and unplug the unit during storms.
- Make sure that water condensation can drain unhindered from the unit.
- Do not operate the air conditioner with wet hands. This may cause electric shock.
- Do not use device for any other purpose than its intended use.
- Do not climb onto or place objects on top of the outdoor unit.
- Do not allow the air conditioner to operate for long periods of time with doors or windows open, or if the humidity is very high.

CLEANING AND MAINTENANCE WARNINGS

- Turn off the device and disconnect the power before cleaning. Failure to do so can cause electrical shock.
- Do not clean the air conditioner with excessive amounts of water.
- Do not clean the air conditioner with combustible cleaning agents. Combustible cleaning agents can cause fire or deformation.

Note about Fluorinated Gasses(Not applicable to the unit using R290 Refrigerant)

- This air-conditioning unit contains fluorinated greenhouse gasses. For specific information on the type of gas and the amount, please refer to the relevant label on the unit itself or the "Owner's Manual - Product Fiche " in the packaging of the outdoor unit. (European Union products only).
- Installation, service, maintenance and repair of this unit must be performed by a certified technician.
- Product uninstallation and recycling must be performed by a certified technician.
- For equipment that contains fluorinated greenhouse gases in quantities of 5 tonnes of CO2 equivalent or more, but of less than 50 tonnes of CO2 equivalent, If the system has a leak-detection system installed, it must be checked for leaks at least every 24 months.
- When the unit is checked for leaks, proper record-keeping of all checks is strongly recommended.

⚠ WARNING FOR USING R32/R290 REFRIGERANT

- When flammable refrigerant are employed, appliance shall be stored in a well - ventilated area where the room size corresponds to the room area as specifiec for operation.
- For R32 frigerant models:
  Appliance shall be installed, operated and stored in a room with a floor area larger than X m^2. Appliance shall not be installed in an unvertilated space, if that space is smaller than X m^2 (Please see the following form).

Model (Btu/h)	Amount of refrigerant to be charged (kg)	Minimum room area (m^2)
≤12000	≤1.11	1
18000	≤1.65	2
24000	≤2.58	5
30000	≤3.08	7
36000	≤3.84	10
42000-48000	≤4.24	12
55000-60000	≤4.39	13

- Reusable mechanical connectors and flared joints are not allowed indoors. (**EN** Standard Requirements).
- Mechanical connectors used indoors shall have a rate of not more than 3g/year at 25% of the maximum allowable pressure. When mechanical connectors are reused indoors, sealing parts shall be renewed. When flared joints are reused indoors, the flare part shall be re-fabricated. (**UL** Standard Requirements)
- When mechanical connectors are reused indoors, sealing parts shall be renewed. When flared joints are reused indoors, the flare part shall be re-fabricated. (**IEC** Standard Requirements)

SPECIFICATIONS

Product Model	DUCMI105IHB UCMI105OB	DUCMI125IHB UCMI125OB	DUCMI140IHB UCMI140OB
Power source	220-240V~ 50Hz, 1Ph		
Cooling capacity	10.0kW	12.0kW	14.0kW
Heating capacity	11.0kW	13.0kW	14.5kW
Rated current	21.0A	31.0A	31.0A
Rated power input	4600W	7000W	7000W
Outdoor unit resistance class	IP24	IPX4	

PRODUCT OVERVIEW

NOTE ON ILLUSTRATIONS:

Illustrations in this manual are for explanatory purposes. The actual shape of your indoor unit may be slightly different. The actual shape shall prevail.

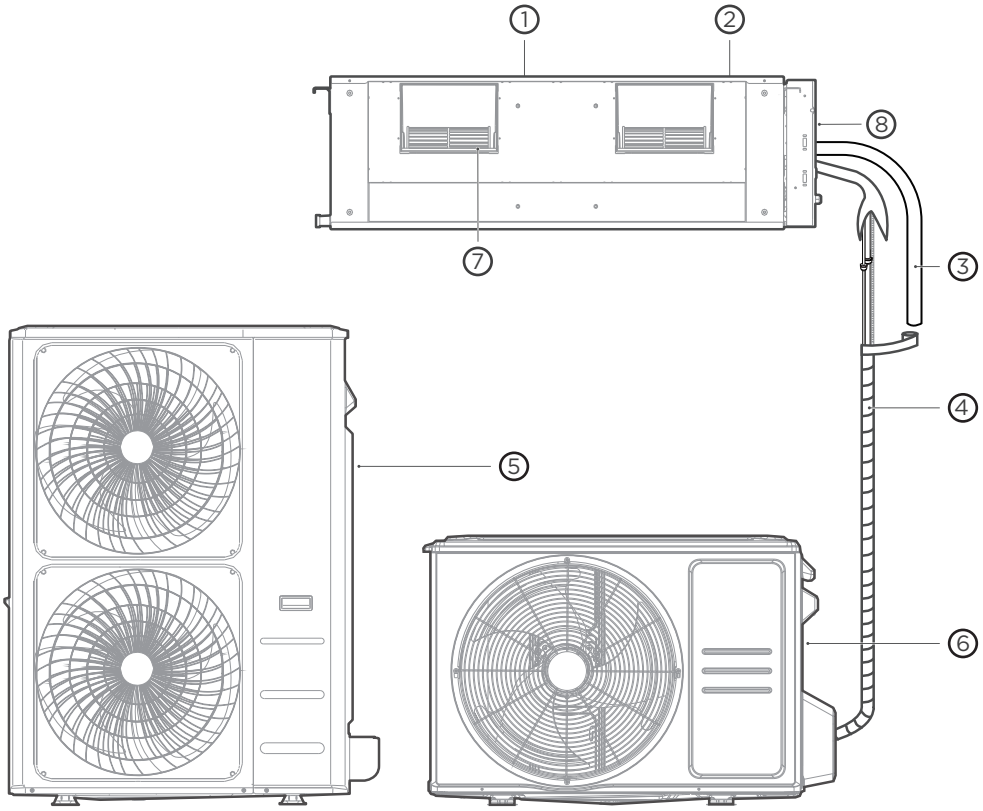

① Air inlet

② Air filter(optional)
-inside air-in grill

③ Drain pipe

④ Connecting pipe

⑤ Outdoor Unit (A)

⑥ Outdoor Unit (B)

⑦ Air outlet

⑧ Electric control cabinet

PRODUCT INSTALLATION

ACCESSORIES

The air conditioning system comes with the following accessories. Use all of the installation parts and accessories to install the air conditioner. Improper installation may result in water leakage, electrical shock and fire, or cause the equipment to fail. The items are not included with the air conditioner must be purchased separately.

Name of Accessories	Q'ty(pc)	Shape
Manual	2~4	
Soundproof/insulation sheath	2	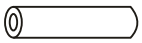
Component of display control unit (some models)	1	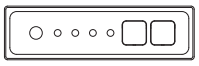
Orifice (some models)	1	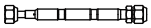
Connecting wire for display (2m) (some models)	1	
Transfer connector (Φ12.7-Φ15.9) (some models)	1	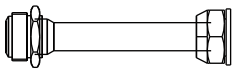
Transfer connector (Φ9.52-Φ12.7) (some models)	1	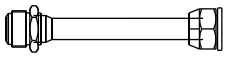
Transfer connector (Φ6.35-Φ9.52) (some models)	1	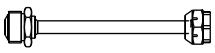
Transfer connector (Φ19-Φ22) (some models)	1	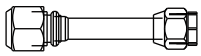
Cord protection rubber ring(some models)	1	

Name of Accessories	Q'ty(pc)	Shape
Drain joint (some models)	1	
Outlet pipe sheath (some models)	1	
Outlet pipe clasp (some models)	1~2 (depending on models)	
Seal ring (some models)	1	
Copper nut	2	
Magnetic ring (wrap the electric wires S1 & S2 (P & Q & E) around the magnetic ring twice) (some models)	1	 S1&S2(P&Q&E)
Magnetic ring (Hitch it on the connective cable between indoor unit and outdoor unit after installation.) (some models)	1	
Magnetic ring (twist the electirc wires L and N around the magnetic ring to five circles)	1	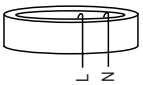
Cable ties	5	

Optional accessories

There are two types of remote controls: wired and wireless.
Select a remote controller based on customer preferences and requirements and install in an appropriate place.
Refer to catalogues and technical literature for guidance on selecting a suitable remote controller.

Name	Shape		Quantity(PC)
Connecting pipe assembly	Liquid side	Φ6.35(1/4in)	Parts you must purchase separately. Consult the dealer about the proper pipe size of the unit you purchased.
		Φ9.52(3/8in)	
		Φ12.7(1/2in)	
	Gas side	Φ9.52(3/8in)	
		Φ12.7(1/2in)	
		Φ16(5/8in)	
		Φ19(3/4in)	
		Φ22(7/8in)	

INSTALLATION SUMMARY - INDOOR UNIT

1

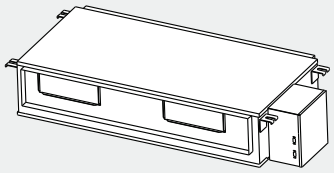

Install the indoor unit

2

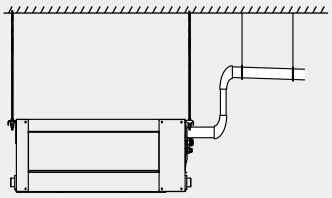

Install the drainpipe

3

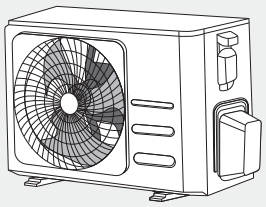

Install the outdoor unit

6

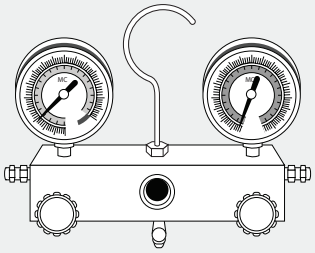

Evacuate the refrigeration system

5

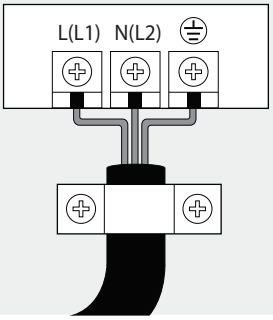

Connect the wires

4

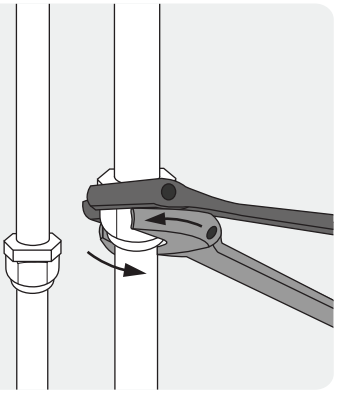

Connect the refrigerant pipes

7

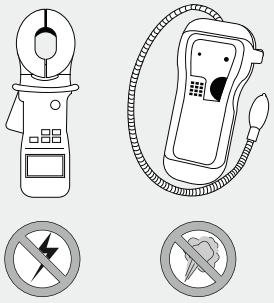

Perform a test run

Install Your Indoor Unit

1 Select installation location

NOTE

Before installing the indoor unit, you must choose an appropriate location. The following are standards that will help you choose an appropriate location for the unit.

Proper installation locations meet the following standards:



☑ Enough room exists for installation and maintenance.

☑ Enough room exists for the connecting the pipe and drainpipe.



☑ There is no direct radiation from heaters.



☑ The air inlet and outlet are not blocked.

☑ The airflow can fill the entire room.

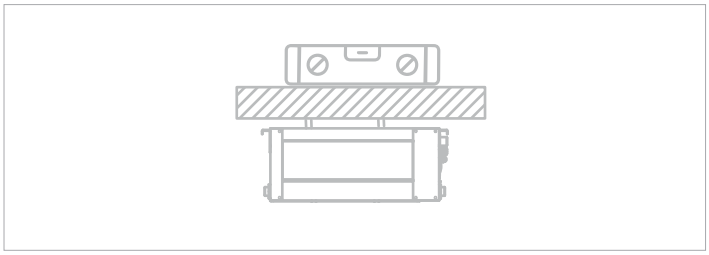

☑ The ceiling is horizontal and its structure can sustain the weight of the indoor unit.

Models with a cooling capacity of 9000Btu to 18000Btu only apply to one room.

DO NOT install unit in the following locations:

- ⊘ Areas with oil drilling or fracking
- ⊘ Coastal areas with high salt content in the air
- ⊘ Areas with caustic gases in the air, such as hot springs
- ⊘ Areas that experience power fluctuations, such as factories
- ⊘ Enclosed spaces, such as cabinets
- ⊘ Kitchens that use natural gas
- ⊘ Areas with strong electromagnetic waves
- ⊘ Areas that store flammable materials or gas
- ⊘ Rooms with high humidity, such as bathrooms or laundry rooms

2 Confirm installation sizes

Installation place

The distance between the mounted indoor unit should meet the specifications illlustrated in the following diagram.

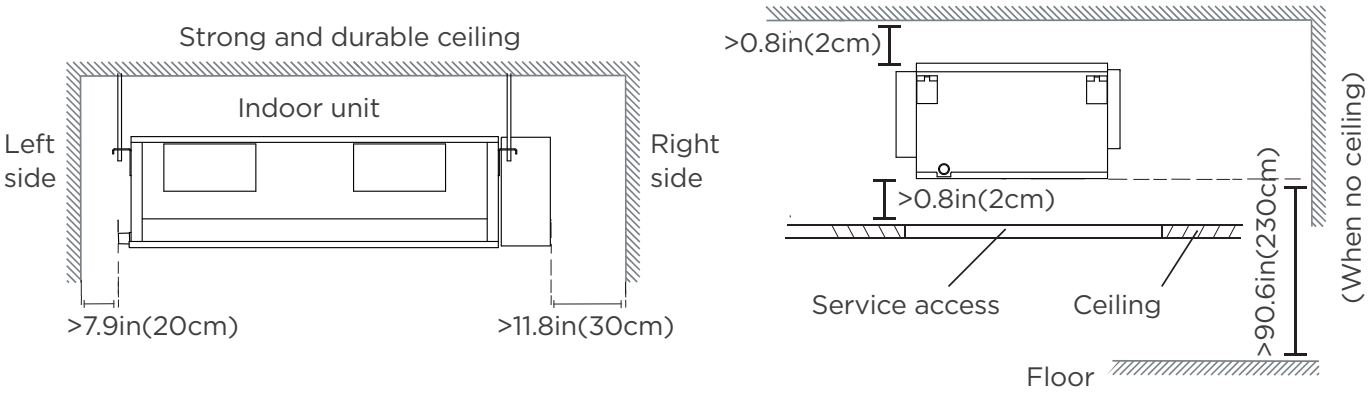

Maintenance space

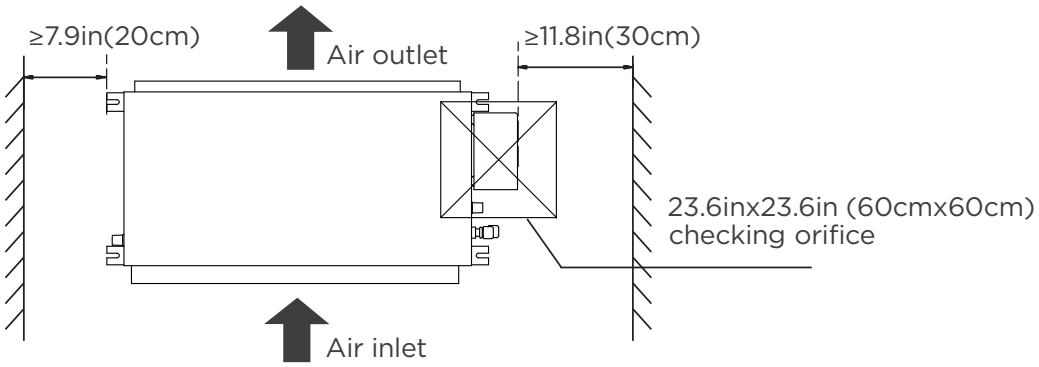

2 Hang indoor unit

Please refer to the following diagrams to locate the four positioning screw bolt holes on the ceiling. Be sure to mark the paces where you will drill ceiling hook holes. This unit has been installed air intake pipe flange, but there is no air filter.

Applicable to 30~48K series only

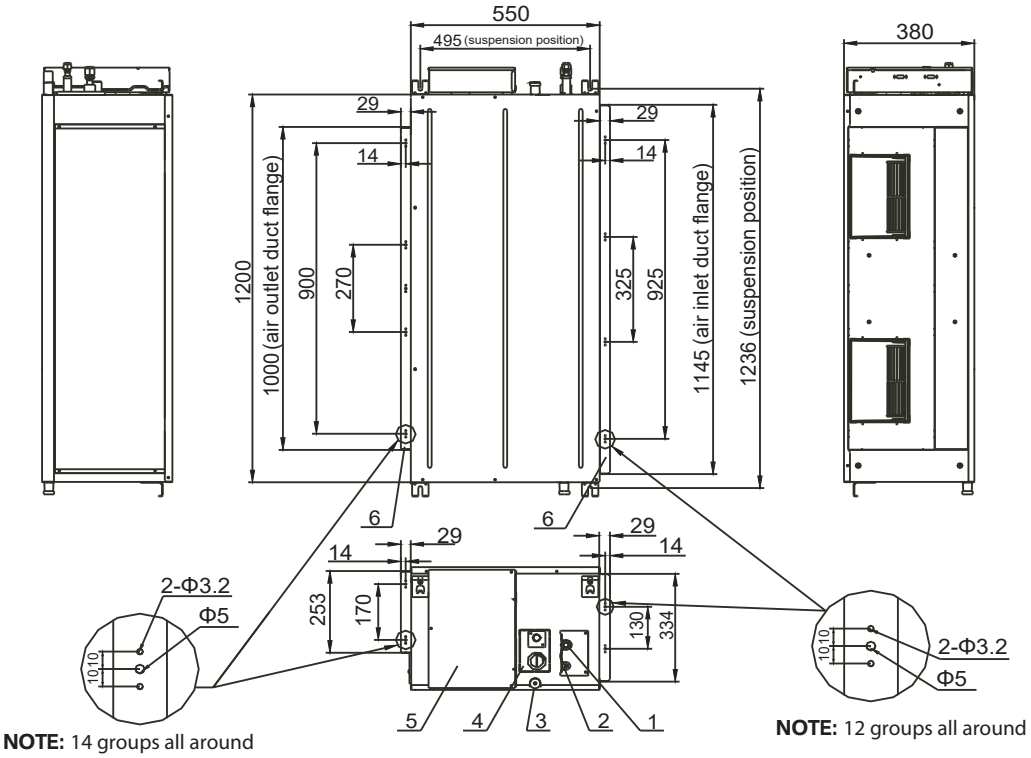

Applicable to 60K series only

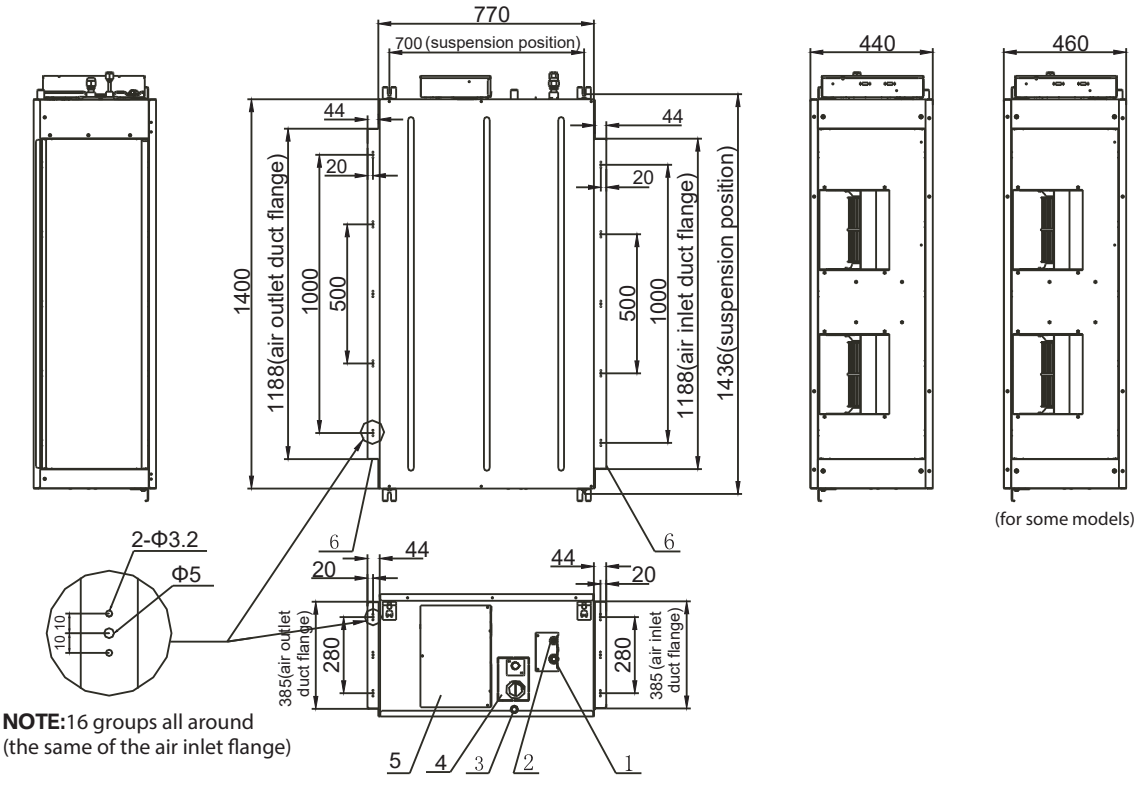

Applicable to 30~60K series only

Number	Name	Description
1	Gas pipe connection	Ø15.9 (30~36K units) ; Ø19 or Ø22 (48~60K units)
2	Liquid pipe connection	Ø9.5
3	Drain pipe connection	OD Ø25 ID Ø20
4	Drain pipe connection	Using drain pump (optional)
5	Power supply connection	–
6	Air discharge flange	–

The size of installation for indoor unit following , This unit has installed with air filter.

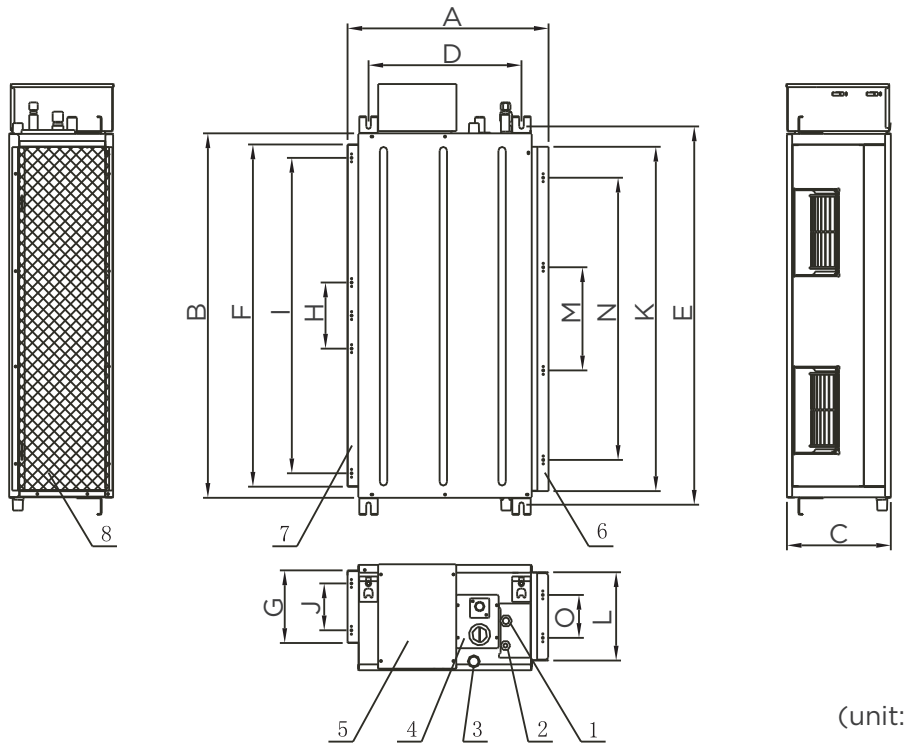

(unit: mm/inch)

MODEL (Btu/h)	Outline dimension			size of mounted lug		air outlet opening size (symmetry of air outlet opening)					air inlet opening size (symmetry of air inlet opening)				
	A	B	C	D	E	F	G	H	I	J	K	L	M	N	O
30K~60K	625/24.6	1200/47.2	380/15	495/19.5	1236/48.6	1000/39.3	253/10	270/10.6	900/35.4	170/6.7	1145/45	334/13.1	325/12.8	925/36.4	130/5.1
55K~60K	858/33.8	1400/55.1	440/17.3 or 460/18	700/27.5	1436/56.5	1188/46.7	385/15	500/20	1000/39.3	280/11	1188/46.7	385/15	500/20	1000/39.3	280/11

Number	Name	fixed-frequency	inverter
1	Gas pipe connection	Ø15.9 (30~36K units) Ø19 or Ø22 (48~60K units)	Ø15.9 or Ø19 or Ø22
2	Liquid pipe connection	Ø9.5	Ø9.5
3	Drain pipe connection	OD Ø25 ID Ø20	OD Ø25 ID Ø20
4	Drain pipe connection	Using drain pump (optional)	Using drain pump (optional)
5	Power supply connection	_	_
6	Air inlet duct flange	some models	some models
7	Air outlet duct flange	_	_
8	Air filter	optional	optional

Wooden structure installation

Place the wood mounting across the roof beam, then install the hanging screw bolts.

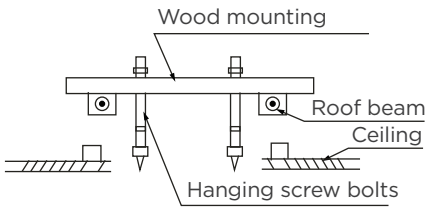

New concrete bricks

Inlay or embed the screw bolts.


(Blade shape insertion)


(Slide insertion)

Original concrete bricks

Use an embedding screw bolt, crock, and stick harness.

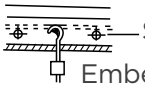

(Pipe hanging and embedding screw bolt)

Steel roof beam structure

Install and use the supporting steel angle.

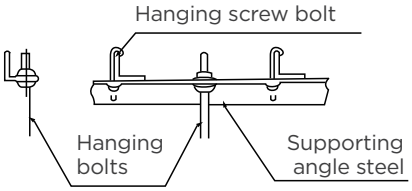

⚠ CAUTION

The unit body must be completely aligned with the hole. Ensure that the unit and the hole are the same size before moving on.

1. Install and fit pipes and wires after you have finished installing the main body. When choosing where to start, determine the direction of the pipes to be drawn out. Especially in cases where there is a ceiling involved, align the refrigerant pipes, drain pipes, and indoor and outdoor lines with their connection points before mounting the unit.
2. The installation of hanging screw bolts.
   - Cut off the roof beam.
   - Strengthen the area at which the cut was made and consolidate the roof beam.
3. After the selection of the installation location, position the refrigerant pipes, drain pipes, and indoor and outdoor wires to the connection points before mounting the machine.
4. Drill 4 holes 10cm (4”) deep at the ceiling hook positions in the internal ceiling. Be sure to hold the drill at a 90° angle to the ceiling.
5. Secure the bolt using the included washers and nuts.
6. Install the four suspension bolts.
7. Mount the indoor unit. You will need two people to lift and secure it. Insert suspension bolts into the unit’s hanging holes. Fasten them using the included washers and nuts.

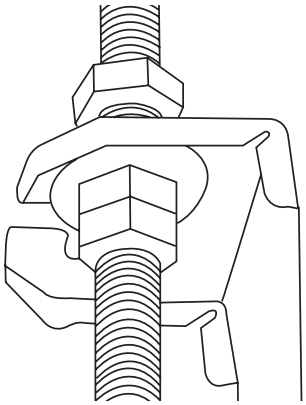

8. Mount the indoor unit onto the hanging screw bolts with a block. Position the indoor unit flat using a level indicator to prevent leaks.

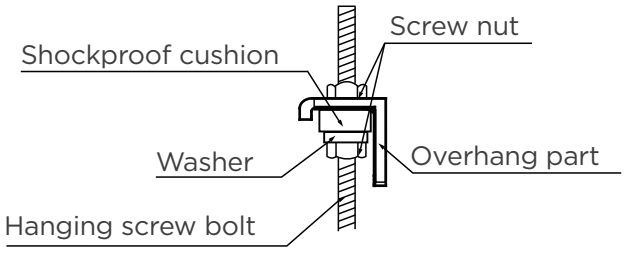

NOTE: Confirm the minimum drain tilt is 1/100 or more.

Step 3: Installing the main body

Installing the dust proof net and canvas air passage

1. Install the dust proof net according to the installation manual;
2. Install the canvas air passage underneath the dust proof net.

Step 4: Duct and accessories installation

1. The air inlet and air outlet duct should be far enough apart enough to prevent air outlet entering Air Inlet.
2. There is dust filter on the indoor unit.
3. Please attach the outside air duct to the indoor air outlet/inlet flange by using the type ST3.9 x 10 screw.
4. Connect the duct according to the following diagram:

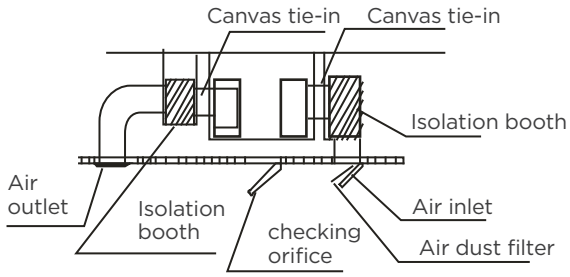

NOTE:

1. Do not put the connecting duct weight on the indoor unit.
2. When connecting the duct, use an nonflammable canvas tie-in to prevent vibrating.
3. When connecting duct, install in place prone to takedown for maintenance.
4. Change the fan motor static pressure corresponding to external duct static pressure.
5. If installed in place like meeting room where noise is easy to be perceived, design isolation booth and internal duct underlayer to muffle the duct system and weaken the air encounter noise in the duct.

Step 5: Motor and drain pump, Pump maintainance.

1. Remove four screws from the drain pump.
2. Unplug the pump power supply and water level switch cable.
3. Detach the pump.

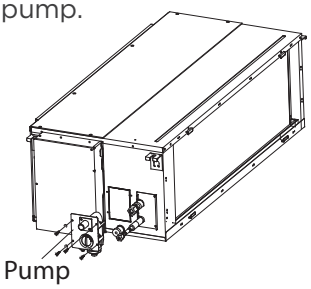

Motor maintain:

There are three methods:

Type 1:
Remove the front side plate from the top.
• Remove the top cover as shown.

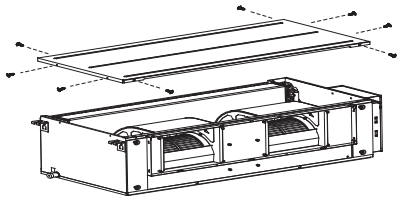

• Loosen the four bolts and two screws which used to fasten the front side plate.

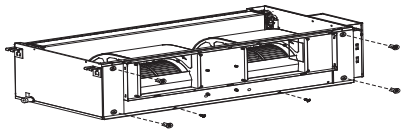

• Remove the cord of motor, take off the front side plate and repair the motor.

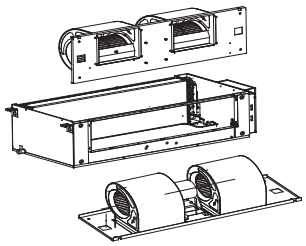

Type 2:
Remove the front side plate from the bottom.
• Remove the bottom base as shown.

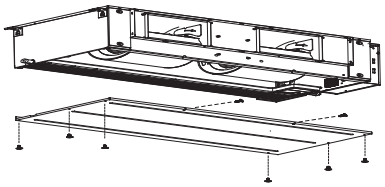

• Loosen the four bolts and two screws which used to fasten the front side plate(Be careful, the front side plate may fall down)

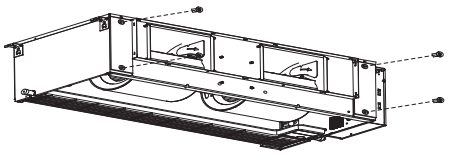

• Remove the cord of motor, take off the front side plate and repair the motor.

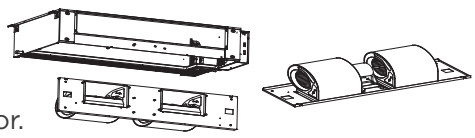

Type 3:
Repair it directly (only applicable to plastic scroll and fan wheel)

• Take off the chassis assembly and filter .
• Take off the volute. • Take off the motor.

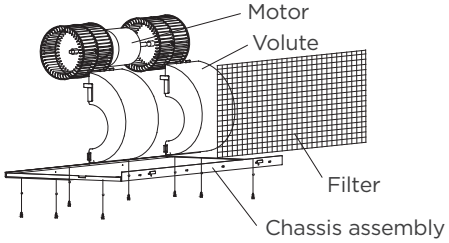

Step 6:
Drill wall hole for pipe connection

1. Determine the location of the wall hole based on the location of the outdoor unit.
2. Using a 65mm (2.5in) or 90mm(3.54in) (depending on models)core drill, drill a hole in the wall. Make sure that the hole is drilled at a slight downward angle, so that the outdoor end of the hole is lower than the indoor end by about 12mm (0.5in). This will ensure proper water drainage.
3. Place the protective wall cuff in the hole. This protects the edges of the hole and will help seal it when you finish the installation process.

⚠ CAUTION

When drilling the wall hole, make sure to avoid wires, plumbing, and other sensitive components.

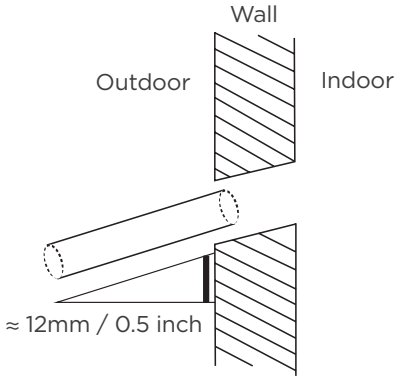

Step 7: Connect drain hose

The drainpipe is used to drain water away from the unit. Improper installation may cause unit and property damage.

⚠ CAUTION

- Insulate all piping to prevent condensation, which could lead to water damage.
- If the drainpipe is bent or installed incorrectly, water may leak and cause a water-level switch malfunction.
- In HEAT mode, the outdoor unit will discharge water. Ensure that the drain hose is placed in an appropriate area to avoid water damage and slippage.
- **DO NOT** pull the drainpipe forcefully. This could disconnect it.

NOTE ON PURCHASING PIPES

Installation requires a polyethylene tube (exterior diameter = 3.7-3.9cm, interior diameter = 3.2cm), which can be obtained at your localhardware store or dealer.

Indoor Drainpipe Installation

Install the drain pipe as illustrated in the Figure.

1. Cover the drainpipe with heat insulation to prevent condensation and leakage.
2. Attach the mouth of the drain hose to the unit's outlet pipe. Sheath the mouth of the hose and clip it firmly with a pipe clasp.

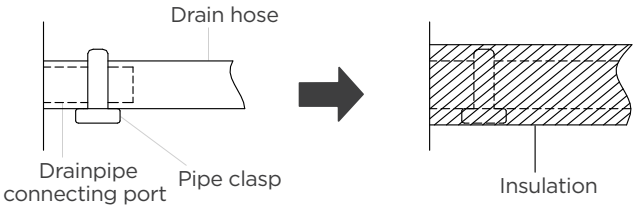

These units operate with a positive pressure at the drain connections and a drain trap is required .

The trap needs to be installed as close to the unit as possible. Make sure the top of the trap is below the connection to the drain pan to allow complete drainage of the pan.

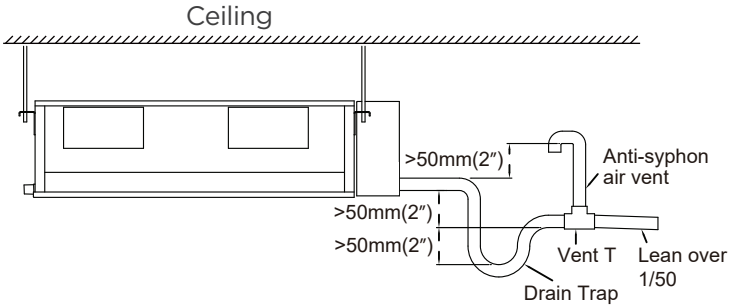

NOTE: Horizontal runs must also have an anti-siphon air vent(standpipe) install ahead of the horizontal run to eliminate air trapping.

NOTE ON DRAINPIPE INSTALLATION

- When using an extended drainpipe, tighten the indoor connection with an additionalprotection tube. This prevents it from pulling loose.
- The drainpipe should slope downward at a gradient of at least 1/100 to prevent water from flowing back into the air conditioner.
- To prevent the pipe from sagging, space hanging wires every 1-1.5m (39-59").
- If the outlet of the drainpipe is higher than the body's pump joint, use a lift pipe for the indoor unit's exhaust outlet. The lift pipe must be installed no higher than 55cm (21.7") from the ceiling board. The distance between the unit and the lift pipe must be less than 20cm (7.9"). Incorrect installation could cause water to flow back into the unit and flood.
- To prevent air bubbles, keep the drain hose level or slightly tiled up (<75mm / 3").

Install Your Outdoor Unit

1 Select installation location

NOTE : PRIOR TO INSTALLATION

Before installing the outdoor unit, you must choose an appropriate location. The following are standards that will help you choose an appropriate location for the unit.

Proper installation locations meet the following standards:

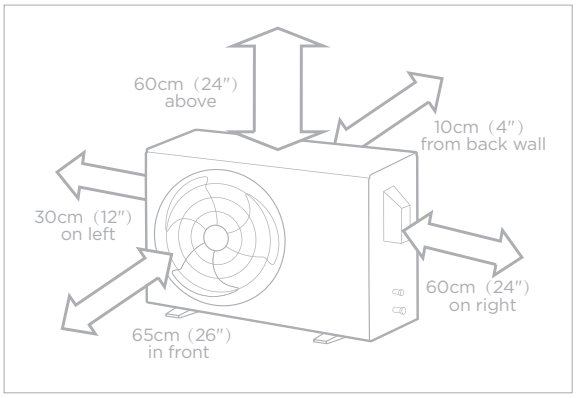

☑ Meets all spatial requirements shown in Installation Space Requirements above.



☑ Good air circulation and ventilation.



☑ Firm and solid—the location can support the unit and will not vibrate.



☑ Noise from the unit will not disturb other people.



☑ Protected from prolonged periods of direct sunlight or rain.

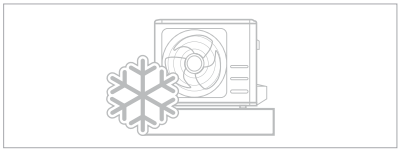

☑ Where snowfall is anticipated, take appropriate measures to prevent ice buildup and coil damage.

NOTE Install the unit by following local codes and regulations , there may be differ slightly between different regions.

⚠ CAUTION:

SPECIAL CONSIDERATIONS FOR EXTREME WEATHER

If the unit is exposed to heavy wind:

Install unit so that air outlet fan is at a 90° angle to the direction of the wind. If needed, build a barrier in front of the unit to protect it from extremely heavy winds. See Figures below.

If the unit is frequently exposed to heavy rain or snow:

Build a shelter above the unit to protect it from the rain or snow. Be careful not to obstruct air flow around the unit.

If the unit is frequently exposed to salty air(seaside):

Use outdoor unit that is specially designed to resist corrosion.

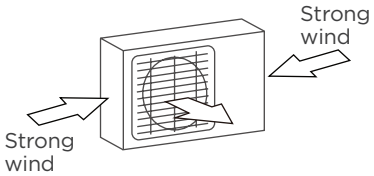

90° angle to the direction of the wind

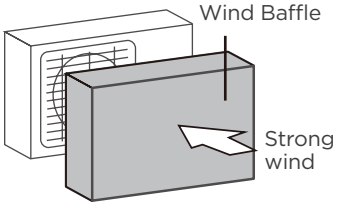

Build a wind Baffle to protect the unit

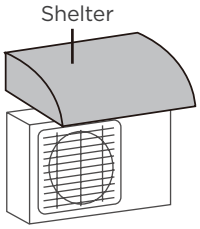

Build a shelter to protect the unit

DO NOT install unit in the following locations:

- ⊘ Near an obstacle that will block air inlets and outlets.
- ⊘ Near a public street, crowded areas, or where noise from the unit will disturb others.
- ⊘ Near animals or plants that will be harmed by hot air discharge.
- ⊘ Near any source of combustible gas.
- ⊘ In a location that is exposed to large amounts of dust
- ⊘ In a location exposed to a excessive amounts of salty air.

2 Install drain joint(Heat pump unit only)

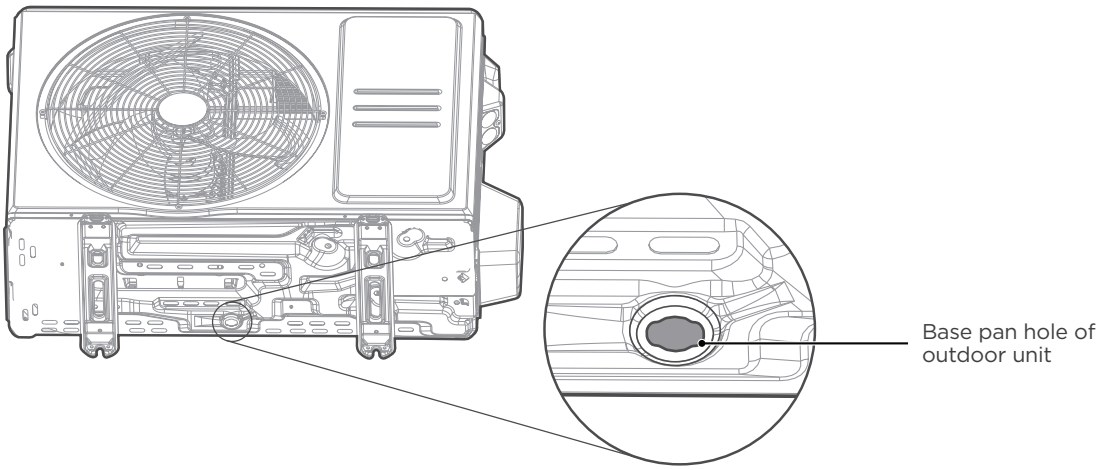

Step 1:

Find out the base pan hole of outdoor unit.

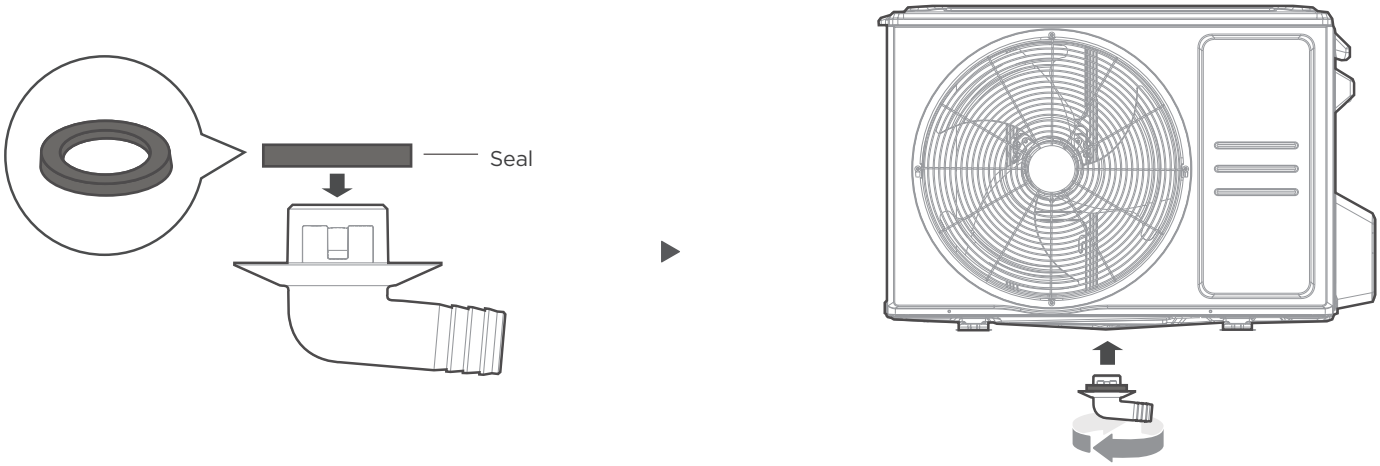

Step 2:

- Fit the rubber seal on the end of the drain joint that will connect to the outdoor unit.
- Insert the drain joint into the hole in the base pan of the unit. The drain joint will click in place.
- Connect a drain hose extension (not included) to the drain joint to redirect water from the unit during heating mode.

IN COLD CLIMATES

In cold climates, make sure that the drain hose is as vertical as possible to ensure swift water drainage. If water drains too slowly, it can freeze in the hose and flood the unit.

3 Anchor Outdoor Unit

⚠ WARNING

WHEN DRILLING INTO CONCRETE, EYE PROTECTION IS RECOMMENDED AT ALL TIME.

- The outdoor unit can be anchored to the ground or to a wall-mounted bracket with bolt(M10). Prepare the installation base of the unit according to the dimensions below.
- The following is a list of different outdoor unit sizes and the distance between their mounting feet. Prepare the installation base of the unit according to the dimensions below.

Outdoor Unit Types and Specifications (Split Type Outdoor Unit)

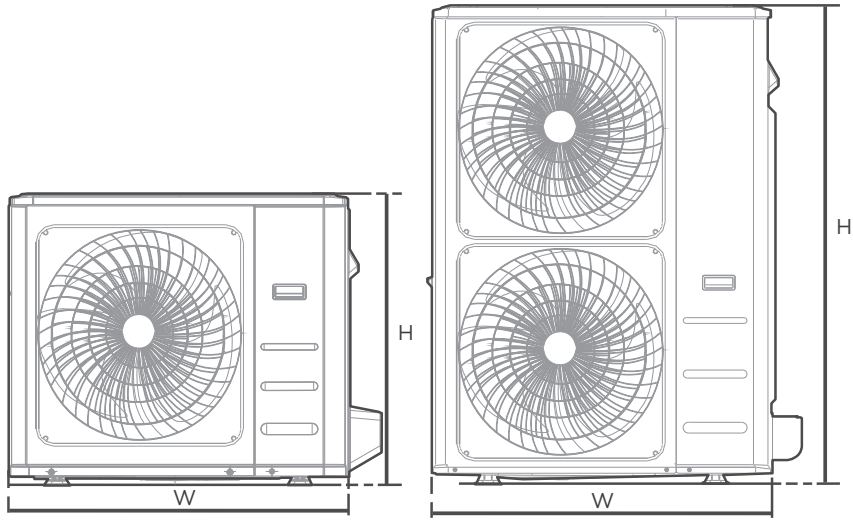

Front view

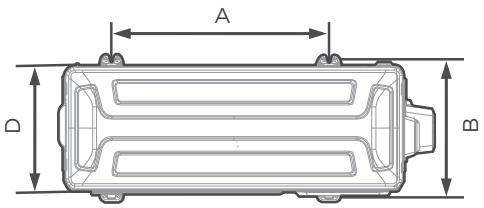

Top view

(unit: mm/inch)

Outdoor Unit Dimensions W x H x D	Mounting Dimensions	
	Distance A	Distance B
760x590x285 (29.9x23.2x11.2)	530 (20.85)	290 (11.4)
770x555x300 (30.3x21.85x11.81)	487 (19.2)	298 (11.73)
810x558x310 (31.9x22x12.2)	549 (21.6)	325 (12.8)
845x700x320 (33.27x27.5x12.6)	560 (22)	335 (13.2)
900x860x315 (35.4x33.85x12.4)	590 (23.2)	333 (13.1)
945x810x395 (37.2x31.9x15.55)	640 (25.2)	405 (15.95)
990x965x345 (38.98x38x13.58)	624 (24.58)	366 (14.4)
938x1369x392 (36.93x53.9x15.43)	634 (24.96)	404 (15.9)
900x1170x350 (35.4x46x13.8)	590 (23.2)	378 (14.88)
800x554x333 (31.5x21.8x13.1)	514 (20.24)	340 (13.39)
845x702x363 (33.27x27.6x14.3)	540 (21.26)	350 (13.8)
946x810x420 (37.24x31.9x16.53)	673 (26.5)	403 (15.87)
946x810x410 (37.24x31.9x16.14)	673 (26.5)	403 (15.87)
952x1333x410 (37.5x52.5x16.14)	634 (24.96)	404 (15.9)
952x1333x415 (37.5x52.5x16.34)	634 (24.96)	404 (15.9)
890x673x342 (35x26.5x13.46)	663 (26.1)	354 (13.94)
765x555x303 (30.1x21.8x11.9)	452 (17.8)	286(11.3)
805x554x330 (31.7x21.8x12.9)	511 (20.1)	317 (12.5)

Rows of series installation

The relations between H, A and L are as follows.

	L	A
L ≤ H	L ≤ 1/2H	25 cm / 9.8” or more
	1/2H < L ≤ H	30 cm / 11.8” or more
L > H	Can not be installed	

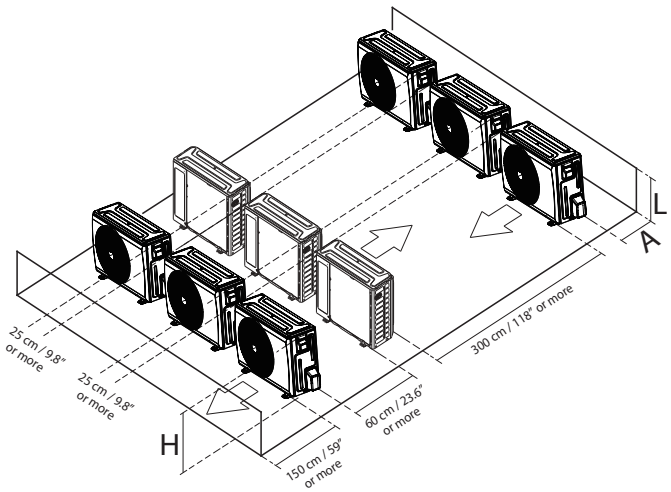

Refrigerant Piping Connection

When connecting refrigerant piping, **DO NOT** let substances or gases other than the specified refrigerant enter the unit. The presence of other gases or substances will lower the unit's capacity, and can cause abnormally high pressure in the refrigeration cycle. This can cause explosion and injury.

Notes on pipe length and elevation

The maximum length and drop height based on models.(Unit:m/ft.)

Type of model	Capacity (Btu/h)	Length of piping	Maximum drop height
North America, Australia and The EU frequency conversion split type	<15K	25/82	10/32.8
	⩾15K-<24K	30/98.4	20/65.6
	⩾24K-<36K	50/164	25/82
	⩾36K-<60K	65/213	30/98.4
Other Split Type	**12**K	15/49	8/26
	18K-24K	25/82	15/49
	30K-36K	30/98.4	20/65.6
	42K-60K	50/164	30/98.4

Ensure that the length of the refrigerant pipe, the number of bends, and the drop height between the indoor and outdoor units meets the requirements shown in the table next to it:

⚠ CAUTION

Oil traps

If oil flows back into the outdoor unit's compressor, this might cause liquid compression or deterioration of oil return. Oil traps in the rising gas piping can prevent this.

An oil trap should be installed every 6m(20ft) of vertical suction line riser (＜36000Btu/h unit). An oil trap should be installed every 10m(32.8ft) of vertical suction line riser (⩾36000Btu/h unit).

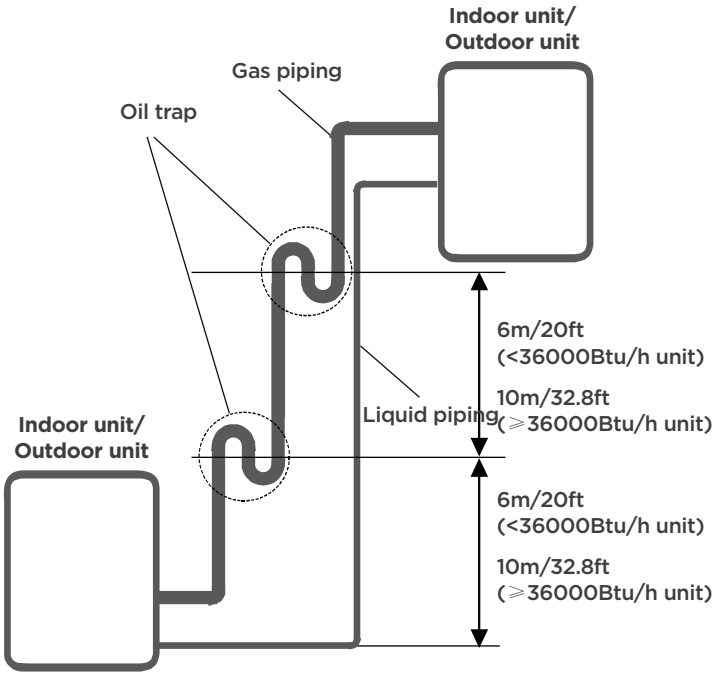

Connection Instructions—Refrigerant Piping

⚠ CAUTION

- The branching pipe must be installed horizontally. An angle of more than 10° may cause malfunction.
- **DO NOT** install the connecting pipe until both indoor and outdoor units have been installed.
- Insulate both the gas and liquid piping to prevent condensation.

Step 1: Cut pipes

When preparing refrigerant pipes, take extra care to cut and flare them properly. This will ensure efficient operation and minimize the need for future maintenance.

- Measure the distance between the indoor and outdoor units.
- Using a pipe cutter, cut the pipe a little longer than the measured distance.
- Make sure that the pipe is cut at a perfect 90° angle.

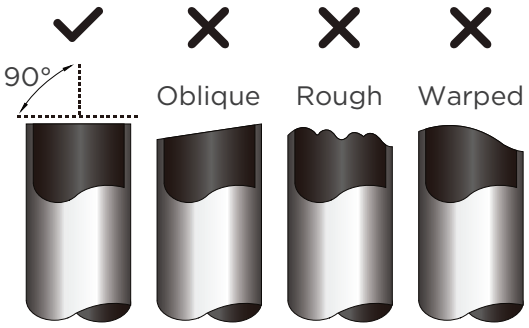

DO NOT DEFORM PIPE WHILE CUTTING

Be extra careful not to damage, dent, or deform the pipe while cutting. This will drastically reduce the heating

Step 2: Remove burrs

Burrs can affect the air-tight seal of refrigerant piping connection. They must be completely removed.

- Hold the pipe at a downward angle to prevent burrs from falling into the pipe.
- Using a reamer or deburring tool, remove all burrs from the cut section of the pipe.

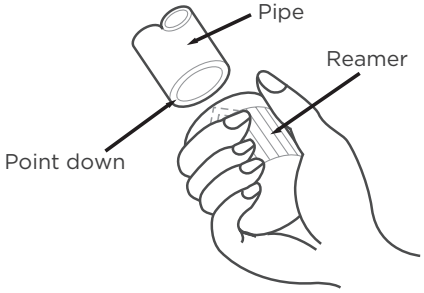

Step 3: Flare pipe ends

Proper flaring is essential to achieve an airtight seal.

- After removing burrs from cut pipe, seal the ends with PVC tape to prevent foreign materials from entering the pipe.
- Sheath the pipe with insulating material.
- Place flare nuts on both ends of pipe. Make sure they are facing in the right direction, because you can't put them on or change their direction after flaring.

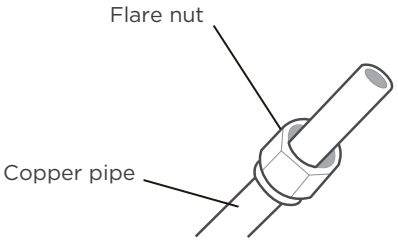

- Remove PVC tape from ends of pipe when ready to perform flaring work.

- Clamp flare from on the end of the pipe. The end of the pipe must extend beyond the flare form.

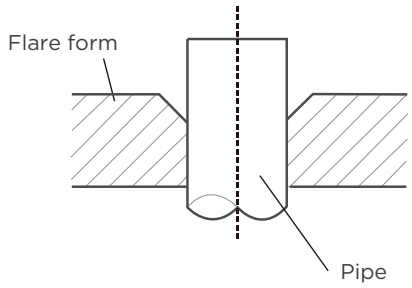

- Place flaring tool onto the form.
- Turn the handle of the flaring tool clockwise until the pipe is fully flared.

PIPING EXTENSION BEYOND FLARE FORM

Pipe gauge	Tightening torque	Flare dimension(A) (Unit:mm/Inch)		Flare shape
		Min.	Max.	
Ø 6.35 (Ø 1/4")	18-20 N.m (180-200kgf.cm)	8.4/0.33	8.7/0.34	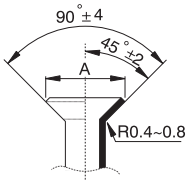
Ø 9.52 (Ø3/8")	32-39 N.m (320-390kgf.cm)	13.2/0.52	13.5/0.53	
Ø 12.7 (Ø 1/2")	49-59 N.m (490-590kgf.cm)	16.2/0.64	16.5/0.65	
Ø 16 (Ø 5/8")	57-71 N.m (570-710kgf.cm)	19.2/0.76	19.7/0.78	
Ø 19 (Ø 3/4")	67-101 N.m (670-1010kgf.cm)	23.2/0.91	23.7/0.93	
Ø 22 (Ø 7/8")	85-110 N.m (850-1100kgf.cm)	26.4/1.04	26.9/1.06	

- Remove the flaring tool and flare form, then inspect the end of the pipe for cracks and even flaring.

Step 4: Connect pipes

Connect the copper pipes to the indoor unit first, then connect it to the outdoor unit. You should first connect the low-pressure pipe, then the highpressure pipe.

- When connecting the flare nuts, apply a thin coat of refrigeration oil to the flared ends of the pipes.
- Align the center of the two pipes that you will connect.
- Tighten the flare nut snugly by hand.
- Using a wrench, grip the nut on the unit tubing.
- While firmly gripping the nut, use a torque wrench to tighten the flare nut according to the torque values in above table.

NOTICE

Use both a spanner and a torque wrench when connecting or disconnecting pipes to/from the unit.

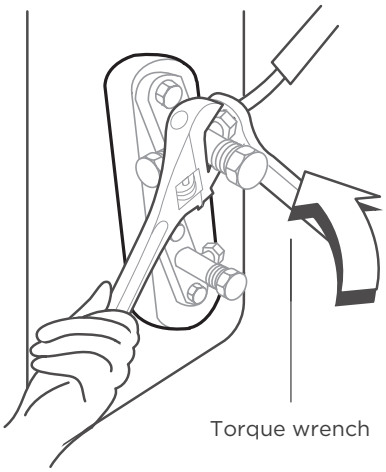

⚠ CAUTION

Ensure to wrap insulation around the piping. Direct contact with the bare piping may result in burns or frostbite.

- Make sure the pipe is properly connected. Over tightening may damage the bell mouth and under tightening may lead to leakage.

NOTICE
MINIMUM BEND RADIUS

Carefully bend the tubing in the middle according to the diagram below.
DO NOT bend the tubing more than 90° or more than 3 times.

Use appropriate tool

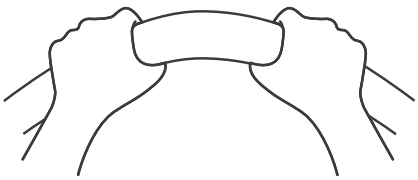

min-radius 10cm(3.9")

- After connecting the copper pipes to the indoor unit, wrap the power cable, signal cable and the piping together with binding tape.

NOTICE

DO NOT intertwine signal cable with other wires. While bundling these items together.
DO NOT intertwine or cross the signal cable with any other wiring.

Wiring precautions

⚠ WARNING

BEFORE PERFORMING ANY ELECTRICAL WORK, READ THESE WARNINGS.

- All wiring must comply with local and national electrical codes, regulations and must be installed by a licensed electrician.
- All electrical connections must be made according to the Electrical Connection Diagramlocated on the panels of the indoor and outdoor units.
- If there is a serious safety issue with the power supply, stop work immediately. Explain your reasoning to the client, and refuse to install the unit until the safety issue is properly resolved.
- Power voltage should be within 90-110% of rated voltage. Insufficient power supply can cause malfunction, electrical shock, or fire.
- Installation of an external surge suppressor at the outdoor disconnect is recommended.
- If connecting power to fixed wiring, a switch or circult breaker that disconnects all poles and has a contact separation of at least 1/8in (3mm) must be incorporated in the fixed wiring. The qualified technician must use an approved circuit breaker or switch.
- Only connect the unit to an individual branch circuit. Do not connect another appliance to that outlet.
- Make sure to properly ground the air conditioner.
- Every wire must be firmly connected. Loose wiring can cause the terminal to overheat, resulting in product malfunction and possible fire.
- Do not let wires touch or rest against refrigerant tubing, the compressor, or any moving parts within the unit.
- If the unit has an auxiliary electric heater, it must be installed at least 1 meter (40in) away from any combustible materials.
- To avoid getting an electric shock, never touch the electrical components soon after the power supply has been turned off. After turning off the power, always wait 10 minutes or more before you touch the electrical components.
- Make sure that you do not cross your electrical wiring with your signal wiring. This may cause distortion, interference or
- possibly damage to circuit boards.
- No other equipment should be connected to the same power circuit.
- Connect the outdoor wires before connecting the indoor wires.

⚠ WARNING

BEFORE PERFORMING ANY ELECTRICAL OR WIRING WORK, TURN OFF THE MAIN POWER TO THE SYSTEM.

NOTE ON AIR SWITCH

When the maximum current of the air conditioner is more than 16A, an air switch or leakage protection switch with protective device shall be used(purchased seperately). When the maximum current of the air conditioner is less than 16A, the power cord of air conditioner shall be equipped with plug (purchased seperately). In North America, the applicance should be wired according to NEC and CEC requirements.

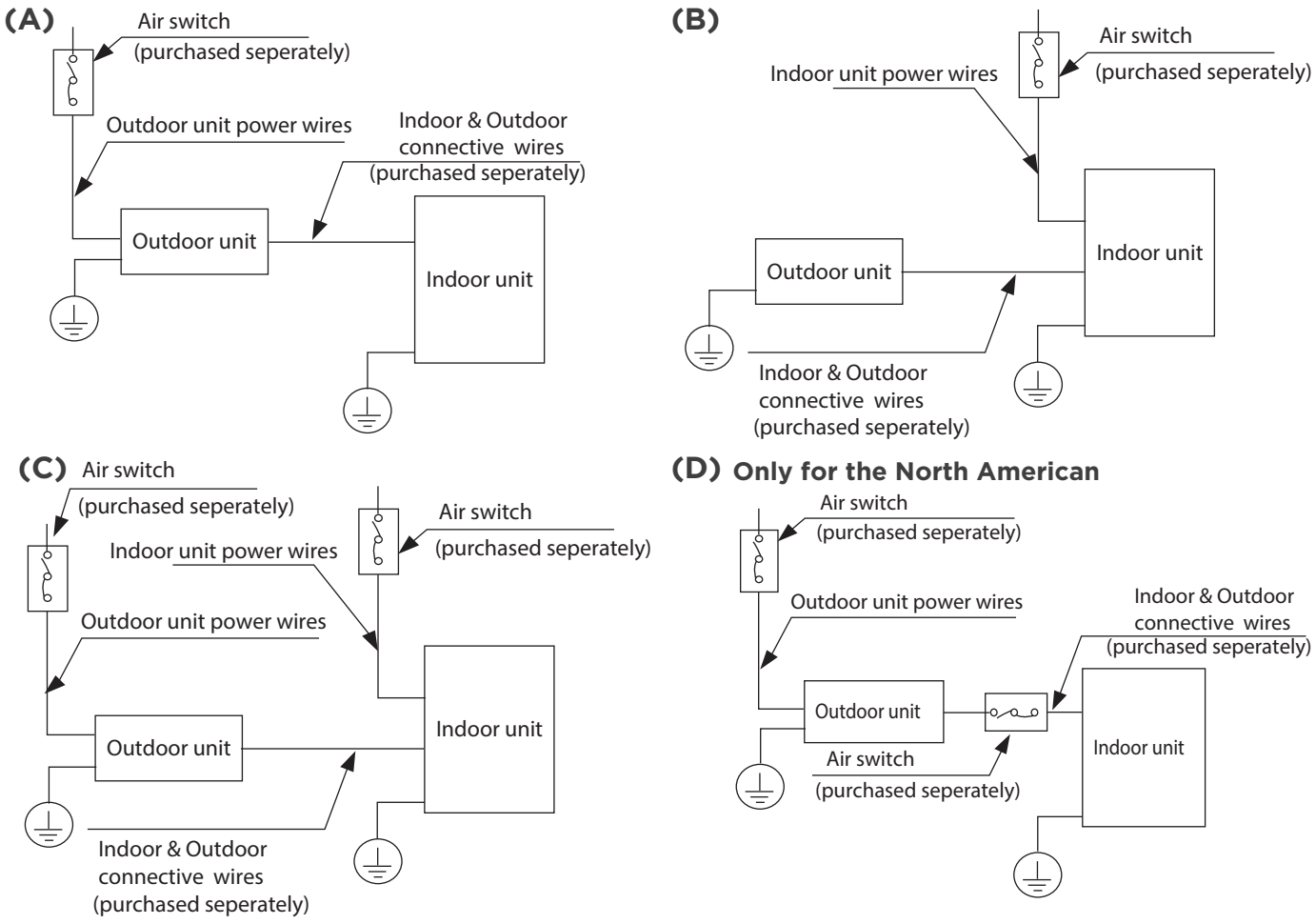

NOTE: The cographs are for explanation purpose only. Your machine may be slightly different. The actual shape shall prevail.

OUTDOOR UNIT WIRING

⚠ WARNING

Before performing any electrical or wiring work, turn off the main power to the system.

1. Prepare the cable for connection

a. You must first choose the right cable size. Be sure to use H07RN-F cables.

NOTE: In North America, choose the cable type according to the local electrical codes and regulations.

Minimum Cross-Sectional Area of Power and Signal Cables (For reference)

Rated Current of Appliance (A)	Nominal Cross-Sectional Area (mm^2)
> 3 and ≤ 6	0.75
> 6 and ≤ 10	1
> 10 and ≤ 16	1.5
> 16 and ≤ 25	2.5
> 25 and ≤ 32	4
> 32 and ≤ 40	6

CHOOSE THE RIGHT CABLE SIZE

The size of the power supply cable, signal cable, fuse, and switch needed is determined by the maximum current of the unit. The maximum current is indicated on the nameplate located on the side panel of the unit. Refer to this nameplate to choose the right cable, fuse, or switch.

NOTE: In North America, please choose the right cable size according to the Minimum Circuit Ampacity indicated on the nameplate of the unit.

b. Using wire strippers, strip the rubber jacketfrom both ends of the signal cable to reveal approximately 15cm (5.9") of wire.
c. Strip the insulation from the ends.
d. Using a wire crimper, crimp u-lugs on the ends.

NOTE: When connecting the wires, strictly follow the wiring diagram found inside the electrical box cover.

2. Remove the 2 screws fixed on the front panel and side panel, then take it down to perform wire connection(see the figure of outdoor unit A).
   Unscrew the electrical wiring cover and remove it.(see the figure of outdoor unit B)

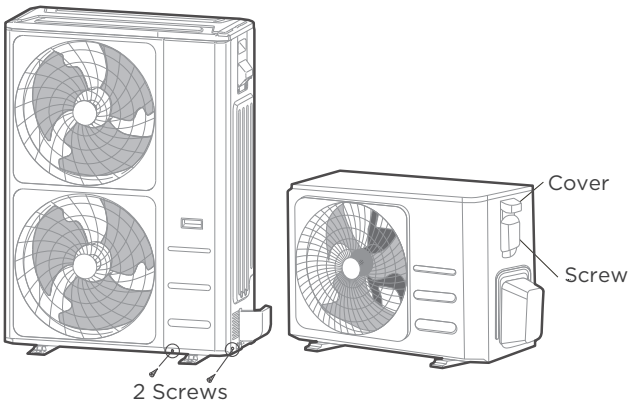

Outdoor Unit A Outdoor Unit B

3. Connect the u-lugs to the terminals
   Match the wire colors/labels with the labels on the terminal block. Firmly screw the u-lug of each wire to its corresponding terminal.
4. Clamp down the cable with the cable clamp.
5. Insulate unused wires with electrical tape. Keep them away from any electrical or metal parts.
6. Reinstall the cover of the electric control box.

Australia models

Please prepare spanner and flat-blade screwdriver before your installation work .

1. Remove two fixing screws, then remove the front panel.

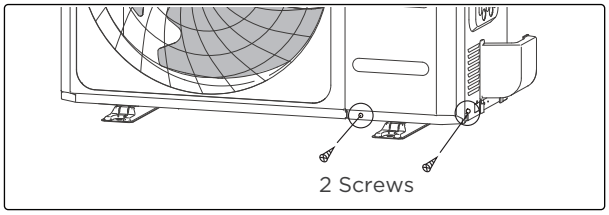

2. Use spanner and flat-blade screwdriver to knock down two metal seals, then pick the metal flakes out.

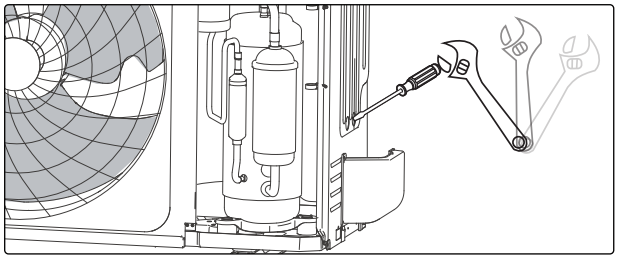

3. Connect the power cable and indoor & outdoor connection cable. Clamp down the cable with the cable clamp.
4. The wire groups shall be bound with cable ties and fixed on the right side plate after they are connected. The strong electric wire group and weak electric wire group shall be led out separately through the two knock down holes on the bottom of the right side plate and fastened with a locking connector as shown in the figure below.

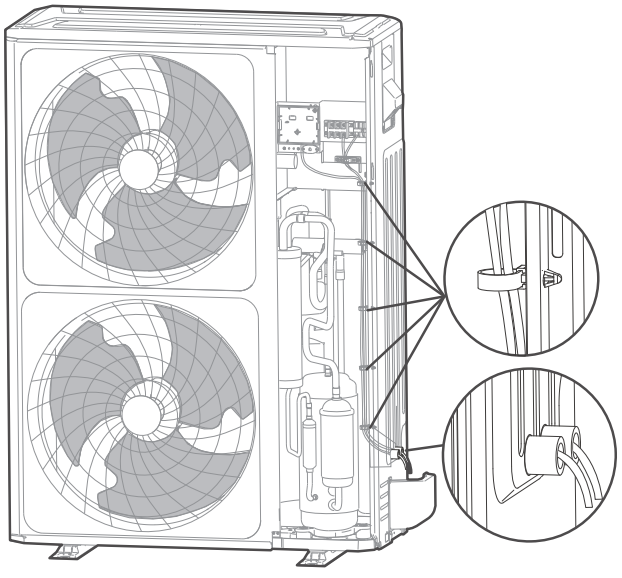

INDOOR UNIT WIRING

1. Prepare the cable for connection.
   a. Using wire strippers, strip the rubber jacket from both ends of the signal cable to reveal about 15cm (5.9”) of the wire.
   b. Strip the insulation from the ends of the wires.
   c. Using a wire crimper, crimp the u-lugs to the ends of the wires.
2. Remove the cover of the electric control box on your indoor unit.
3. Connect the u-lugs to the terminals.

   Match the wire colors/labels with the labels on the terminal block. Firmly screw the u-lug of each wire to its corresponding terminal. Refer to the Serial Number and Wiring Diagram located on the cover of the electric control box.

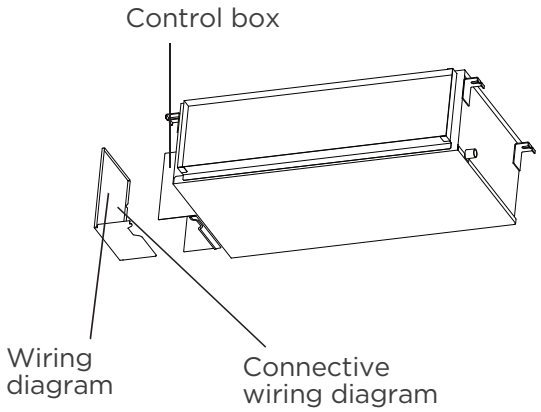

Magnetic ring (if supplied and packed with the accessories)

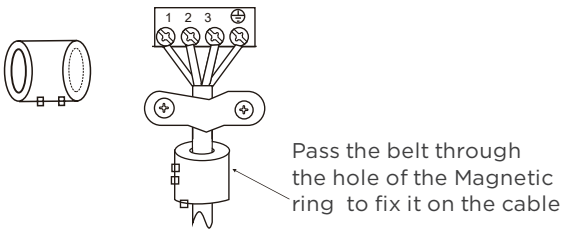

⚠ CAUTION

- While connecting the wires, please strictly follow the wiring diagram.
- The refrigerant circuit can become very hot. Keep the interconnection cable away from the copper tube.

4. Clamp down the cable with the cable clamp. The cable must not be loose or pull on the u-lugs.
5. Reattach the electric box cover.

Power Specifications(Not applicable for North America)

NOTE

Electric auxiliary heating type circuit breaker/fuse need to add more than 10 A.
The circuit breaker/fuse specification shall be subject to the unit nameplate. (applicable for Australian model)

Indoor Power Supply Specifications

MODEL(Btu/h)		≤18K	19K~24K	25K~36K	37K~48K	49K~60K
POWER	PHASE	1 Phase	1 Phase	1 Phase	1 Phase	1 Phase
	VOLT	208-240V	208-240V	208-240V	208-240V	208-240V
CIRCUIT BREAKER/ FUSE(A)		25/20	32/25	50/40	70/55	70/60

MODEL(Btu/h)		≤36K	37K~60K	≤36K	37K~60K
POWER	PHASE	3 Phase	3 Phase	3 Phase	3 Phase
	VOLT	380-420V	380-420V	208-240V	208-240V
CIRCUIT BREAKER/FUSE(A)		25/20	32/25	32/25	45/35

Outdoor Power Supply Specifications

MODEL(Btu/h)		≤18K	19K~24K	25K~36K	37K~48K	49K~60K
POWER	PHASE	1 Phase	1 Phase	1 Phase	1 Phase	1 Phase
	VOLT	208-240V	208-240V	208-240V	208-240V	208-240V
CIRCUIT BREAKER/ FUSE(A)		25/20	32/25	50/40	70/55	70/60

MODEL(Btu/h)		≤36K	37K~60K	≤36K	37K~60K
POWER	PHASE	3 Phase	3 Phase	3 Phase	3 Phase
	VOLT	380-420V	380-420V	208-240V	208-240V
CIRCUIT BREAKER/FUSE(A)		25/20	32/25	32/25	45/35

Independent Power Supply Specifications

MODEL(Btu/h)		≤18K	19K~24K	25K~36K	37K~48K	49K~60K
POWER (indoor)	PHASE	1 Phase	1 Phase	1 Phase	1 Phase	1 Phase
	VOLT	208-240V	208-240V	208-240V	208-240V	208-240V
CIRCUIT BREAKER/ FUSE(A)		15/10	15/10	15/10	15/10	15/10
POWER (outdoor)	PHASE	1 Phase	1 Phase	1 Phase	1 Phase	1 Phase
	VOLT	208-240V	208-240V	208-240V	208-240V	208-240V
CIRCUIT BREAKER/ FUSE(A)		25/20	32/25	50/40	70/55	70/60

MODEL(Btu/h)		≤36K	37K~60K	≤36K	37K~60K
POWER (indoor)	PHASE	1 Phase	1 Phase	1 Phase	1 Phase
	VOLT	208-240V	208-240V	208-240V	208-240V
CIRCUIT BREAKER/FUSE(A)		15/10	15/10	15/10	15/10
POWER (outdoor)	PHASE	3 Phase	3 Phase	3 Phase	3 Phase
	VOLT	380-420V	380-420V	208-240V	208-240V
CIRCUIT BREAKER/FUSE(A)		25/20	32/25	32/25	45/35

Inverter Type A/C Power Specifications

MODEL(Btu/h)		≤18K	19K~24K	25K~36K	37K~48K	49K~60K
POWER (indoor)	PHASE	1 Phase	1 Phase	1 Phase	1 Phase	1 Phase
	VOLT	220-240V	220-240V	220-240V	220-240V	220-240V
CIRCUIT BREAKER/ FUSE(A)		15/10	15/10	15/10	15/10	15/10
POWER (outdoor)	PHASE	1 Phase	1 Phase	1 Phase	1 Phase	1 Phase
	VOLT	208-240V	208-240V	208-240V	208-240V	208-240V
CIRCUIT BREAKER/ FUSE(A)		25/20	25/20	40/30	50/40	50/40

MODEL(Btu/h)		≤36K	37K~60K	≤36K	37K~60K
POWER (indoor)	PHASE	1 Phase	1 Phase	1 Phase	1 Phase
	VOLT	220-240V	220-240V	220-240V	220-240V
CIRCUIT BREAKER/FUSE(A)		15/10	15/10	15/10	15/10
POWER (outdoor)	PHASE	3 Phase	3 Phase	3 Phase	3 Phase
	VOLT	380-420V	380-420V	208-240V	208-240V
CIRCUIT BREAKER/FUSE(A)		25/20	32/25	32/25	40/30

AIR EVACUATION

NOTICE

When opening valve stems, turn the hexagonal wrench until it hits against the stopper. Do not try to force the valve to open further.

Preparations and precautions

Air and foreign matter in the refrigerant circuit can cause abnormal rises in pressure, which can damage the air conditioner, reduce its efficiency, and cause injury. Use a vacuum pump and manifold gauge to evacuate the refrigerant circuit, removing any non-condensable gas and moisture from the system. Evacuation should be performed upon initial installation and when unit is relocated.

BEFORE PERFORMING EVACUATION

- ☑ Check to make sure the connective pipes between the indoor and outdoor units are connected properly .
- ☑ Check to make sure all wiring is connected properly.

Evacuation Instructions

1. Connect the charge hose of the manifold gauge to service port on the outdoor unit's low pressure valve.
2. Connect another charge hose from the manifold gauge to the vacuum pump.
3. Open the Low Pressure side of the manifold gauge. Keep the High Pressure side closed.
4. Turn on the vacuum pump to evacuate the system.
5. Run the vacuum for at least 15 minutes, or until the Compound Meter reads -76cmHG(-10^5Pa).

Outdoor unit

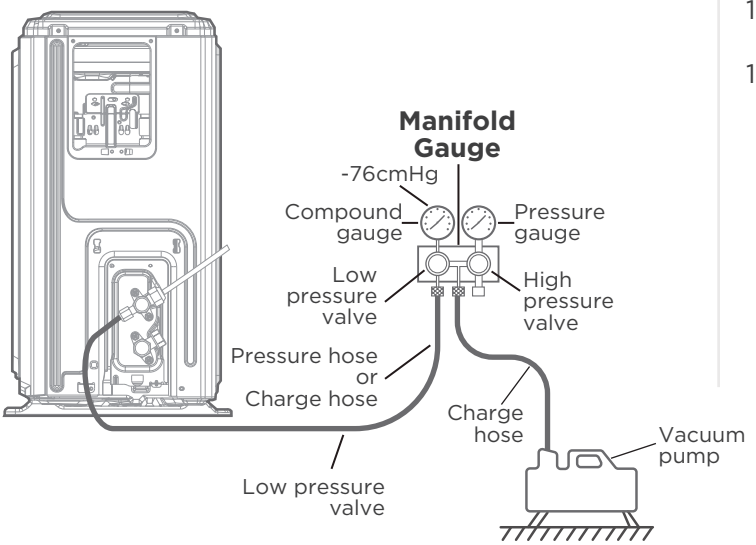

6. Close the Low Pressure side of the manifold gauge, and turn off the vacuum pump.
7. Wait for 5 minutes, then check that there has been no change in system pressure.
8. If there is a change in system pressure, refer to Gas Leak Check section for information on how to check for leaks. If there is no change in system pressure, unscrew the cap from the packed valve (high pressure valve).
9. Insert hexagonal wrench into the packed valve (high pressure valve) and open the valve by turning the wrench in a 1/4 counterclockwise turn. Listen for gas to exit the system, then close the valve after 5 seconds.
10. Watch the Pressure Gauge for one minute to make sure that there is no change in pressure. The Pressure Gauge should read slightly higher than atmospheric pressure.
11. Remove the charge hose from the service port.

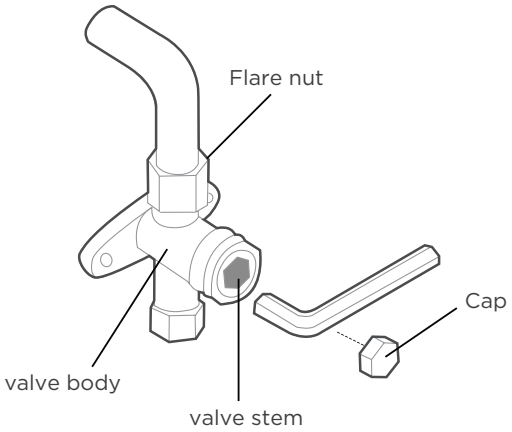

12. Using hexagonal wrench, fully open both the high pressure and low pressure valves.
13. Tighten valve caps on all three valves (service port, high pressure, low pressure) by hand. You may tighten it further using a torque wrench if needed.

NOTE ON ADDING REFRIGERANT

⚠ CAUTION

DO NOT mix refrigerant types.

Some systems require additional charging depending on pipe lengths. The standard pipe length varies according to local regulations. For example, in North America, the standard pipe length is 7.5m (25'). In other areas, the standard pipe length is 5m (16'). The refrigerant should be charged from the service port on the outdoor unit's low pressure valve. The additional refrigerant to be charged can be calculated using the following formula:

	Liquid Side Diameter		
	ϕ6.35(1/4")	ϕ9.52(3/8")	ϕ12.7(1/2")
R22 (orifice tube in the indoor unit):	(Total pipe length - standard pipe length)x 30g (0.32oZ)/m(ft)	(Total pipe length - standard pipe length)x 65g(0.69oZ)/m(ft)	(Total pipe length - standard pipe length)x 115g(1.23oZ)/m(ft)
R22 (orifice tube in the outdoor unit):	(Total pipe length - standard pipe length) x15g(0.16oZ)/m(ft)	(Total pipe length - standard pipe length) x30(0.32oZ)/m(ft)	(Total pipe length - standard pipe length) x60g(0.64oZ)/m(ft)
R410A: (orifice tube in the indoor unit):	(Total pipe length - standard pipe length) x30g(0.32oZ)/m(ft)	(Total pipe length - standard pipe length) x65g(0.69oZ)/m(ft)	(Total pipe length - standard pipe length) x115g(1.23oZ)/m(ft)
R410A: (orifice tube in the outdoor unit):	(Total pipe length - standard pipe length) x15g(0.16oZ)/m(ft)	(Total pipe length - standard pipe length) x30g(0.32oZ)/m(ft)	(Total pipe length - standard pipe length) x65g(0.69oZ)/m(ft)
R32 :	(Total pipe length - standard pipe length)x 12g(0.13oZ)/m(ft)	(Total pipe length - standard pipe length)x 24g(0.26oZ)/m(ft)	(Total pipe length - standard pipe length)x 40g(0.42oZ)/m(ft)

⚠ CAUTION **DO NOT** mix refrigerant types.

Only for Australia models :

- This unit contains factory charged refrigerant covering 20m of refrigerant piping and additional refrigerant charge on the installation site is not required for an installation with up to 20m refrigerant piping. When refrigerant piping exceeds 20m, additionally charge an amount calculated from the pipe length and the above table for the portion in excess of 20m.
- If an existing pipe system is used, a required refrigerant charge volume will vary depending on the liquid pipe size.

  Formula to calculate the volume of additional refrigerant required:

  Additional charge volume (kg) = { Main length (m) – Factory charged volume 20(m) } × 0.03(kg/m)
- Make sure to remove the additional refrigerant amount according to the nameplate rated charge (under 5m refrigerant piping) under market or government verification testing.

TEST RUN

⚠ CAUTION

Failure to perform the test run may result in unit damage, property damage, or personal injury.

Before test run

A test run must be performed after the entire system has been completely installed. Confirm the following points before performing the test:
a) Indoor and outdoor units are properly installed.
b) Piping and wiring are properly connected.
c) No obstacles near the inlet and outlet of the unit that might cause poor performance or product malfunction.
d) Refrigeration system does not leak.
e) Drainage system is unimpeded and draining to a safe location.
f) Heating insulation is properly installed.
g) Grounding wires are properly connected.
h) Length of the piping and additional refrigerant capacity have been recorded.
i) Power voltage is the correct voltage for the air conditioner

Test Run Instructions

1. Open both the liquid and gas stop valves.
2. Turn on the main power switch and allow the unit to warm up.
3. Set the air conditioner to COOL mode.
4. For the Indoor Unit
   a. Ensure the remote control and its buttons work properly.
   b. Ensure the louvers move properly and can be changed using the remote control.
   c. Double check to see if the room temperature is being registered correctly.
   d. Ensure the indicators on the remote control and the display panel on the indoor unit work properly.
   e. Ensure the manual buttons on the indoor unit works properly.
   f. Check to see that the drainage system is unimpeded and draining smoothly.
   g. Ensure there is no vibration or abnormal noise during operation.
5. For the Outdoor Unit
   a. Check to see if the refrigeration system is leaking.
   b. Make sure there is no vibration or abnormal noise during operation.
   c. Ensure the wind, noise, and water generated by the unit do not disturb your neighbors or pose a safety hazard.
6. Drainage Test
   a. Ensure the drainpipe flows smoothly. New buildings should perform this test before finishing the ceiling.
   b. Remove the test cover. Add 2,000ml of water to the tank through the attached tube.
   c. Turn on the main power switch and run the air conditioner in COOL mode.
   d. Listen to the sound of the drain pump to see if it makes any unusual noises.
   e. Check to see that the water is discharged. It may take up to one minute before the unit begins to drain depending on the drainpipe.
   f. Make sure that there are no leaks in any of the piping.
   g. Stop the air conditioner. Turn off the main power switch and reinstall the test cover.

NOTE: If the unit malfunctions or does not operate according to your expectations, please refer to the Troubleshooting section of the Owner's Manual before calling customer service.

SPECIFICATIONS AND FEATURES

Indoor unit

NOTE: Different models have different display panel. Not all the indicators describing below are available for the air conditioner you purchased. Please check the indoor display panel of the unit you purchased.

Illustrations in this manual are for explanatory purposes. The actual shape of your indoor unit may be slightly different. The actual shape shall prevail.

This display panel on the indoor unit can be used to operate the unit in case the remote control has been misplaced or is out of batteries.

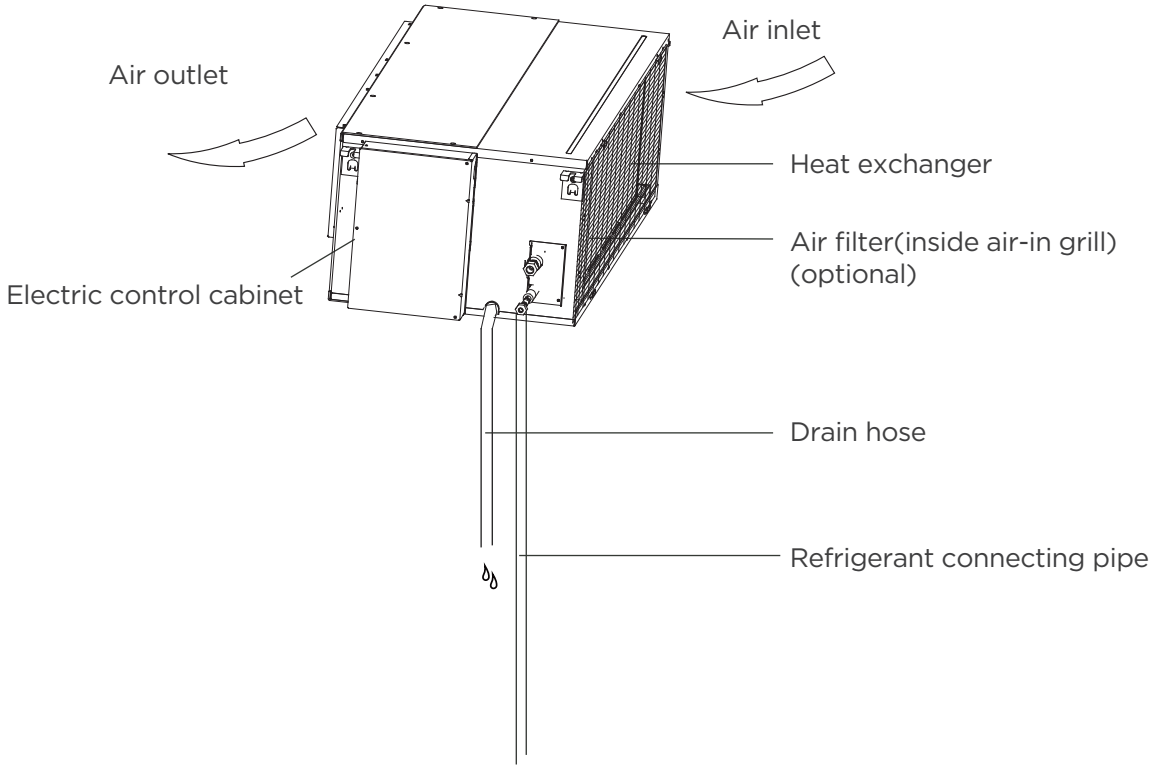

Display panel

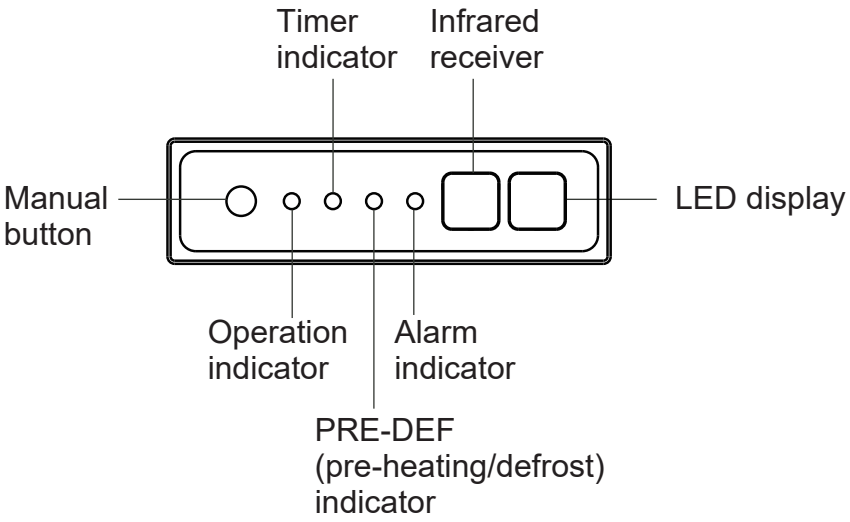

- **MANUAL button** : This button selects the mode in the following order: AUTO, FORCED COOL, OFF.
  FORCED COOL mode : In FORCED COOL mode, the Operation light flashes. The system will then turn to AUTO after it has cooled with a high wind speed for 30 minutes. The remote control will be disabled during this operation.
  OFF mode : When the display panel is turned OFF, the unit turns off and the remote control is re-enabled.

Operating temperature

When your air conditioner is used outside of the following temperature ranges, certain safety protection features may activate and cause the unit to disable.

Inverter Split Type

	COOL mode	HEAT mode	DRY mode
Room Temperature	17°C - 32°C (62°F - 90°F)	0°C - 30°C (32°F - 86°F)	10°C - 32°C (50°F - 90°F)
Outdoor Temperature	0°C - 50°C (32°F - 122°F)	-15°C - 24°C (5°F - 75°F)	0°C - 50°C (32°F - 122°F)
	-15°C - 50°C (5°F - 122°F) (For models with low temp. cooling systems.)		
	0°C - 52°C (32°F - 126°F) (For special tropical models)		0°C - 52°C (32°F - 126°F) (For special tropical models)

FOR OUTDOOR UNITS WITH AUXILIARY ELECTRIC HEATER

When outside temperature is below 0°C (32°F), we strongly recommend keeping the unit plugged in at all time to ensure smooth ongoing performance.

Fixed-speed Type

	COOL mode	HEAT mode	DRY mode
Room Temperature	17°C-32°C (62°F-90°F)	0°C-30°C (32°F-86°F)	10°C-32°C (50°F-90°F)
Outdoor Temperature	18°C-43°C (64°F-109°F)	-7°C-24°C (19°F-75°F)	11°C-43°C (52°F-109°F)
	-7°C-43°C (19°F-109°F) (For models with low-temp cooling systems)		18°C-43°C (64°F-109°F)
	18°C-52°C (64°F-126°F) (For special tropical models)		18°C-52°C (64°F-126°F) (For special tropical models)

NOTE: Room relative humidity less than 80%. If the air conditioner operates in excess of this figure, the surface of the air conditioner may attract condensation. Please sets the vertical air flow louver to its maximum angle (vertically to the floor), and set HIGH fan mode.

To further optimize the performance of your unit, do the following:

- Keep doors and windows closed.
- Limit energy usage by using TIMER ON and TIMER OFF functions.
- Do not block air inlets or outlets.
- Regularly inspect and clean air filters.

Other features

Default Setting

When the air conditioner restarts after a power failure, it will default to the factory settings (AUTO mode, AUTO fan, 24°C (76°F)). This may cause inconsistencies on the remote control and unit panel. Use your remote control to update the status.

Auto-Restart (some models)

In case of power failure, the system will immediately stop. When power returns, the Operation light on the indoor unit will flash. To restart the unit, press the ON/OFF button on the remote control. If the system has an auto restart function, the unit will restart using the same settings.

Refrigerant Leak Detection System (some models)

In the event of a refrigerant leak, the LED DISPLAY will display refrigerant leak error code and the LED indicator light will flash.

WIRE REMOTE CONTROLLER

NOTE

All the pictures in this manual are for explanation purpose only. There may be slightly different from the wired remote controller you purchased (depend on model). The actual shape shall prevail. Read this description carefully before installing or operating your wired remote controller.

Model	KJR-120M(X4)/BGEF, KJR-120M(X4W)/BGEF, KJR-120M(X5)/BGEF, KJR-120M(X5W)/BGEF, KJR-120M(X6)/BGEF, KJR-120M(X6W)/BGEF, KJR-120M1(X4)/BGEF

1. Safety precaution

⚠ WARNING

- Please entrust the distributor or professionals to install the unit.
- Installation by other persons may lead to imperfect installation, electric shock or fire.
- Adhere to this installation manual.
- Imporper installation may lead to electric shock or fire.
- Reinstallation must be performed by professionals.

Do not uninstall the unit randomly.
Random uninstalling may lead to abnormal operation, heating or fre of the air condition.

NOTE:

- Do not install the unit in a place vulnerable to leakage of flammable gases.Once flammable gases are leaked and left around the wire controller, fire may occure.
- Do not operate with wet hands or let water enter the wire controller. Otherwise, electric shock may occur.
- The wiring should adapt to the wire controller current. Otherwise, electric leakage or heating may occur and result in fire.
- The specified cables shall be applied in the wiring. No external force may be applied to the terminal. Otherwise, wire cut and heating may occur and result in fire.

(For North America area)



BATTERY WARNING



WARNING: Contains coin battery.

⚠ WARNING	**INGESTION HAZARD:** This product contains a button cell or coin battery.

- **BATTERY WARNING: KEEP OUT OF REACH OF CHILDREN;**
- If the battery compartment (if applicable) does not close securely, stop using the product and keep it away from children;
- If you think batteries might have been swallowed or placed inside any part of the body, seek immediate medical attention.

⚠ BATTERY WARNING

KEEP OUT OF REACH OF CHILDREN.
Swallowing can lead to chemical burns, perforation of soft tissue, and death.
Severe burns can occur within 2 hours of ingestion.
Seek medical attention immediately.



⚠ WARNING

- **INGESTION HAZARD:** This product contains a button cell or coin battery.
- **DEATH** or serious injury can occur if ingested.
- A swallowed button cell or coin battery can cause **Internal Chemical Burns** in as little as **2 hours.**
- **KEEP** new and used batteries **OUT OF REACH of CHILDREN.**
- **Seek immediate medical attention if a battery** is suspected to be swallowed or inserted inside any part of the body.



⚠ WARNING

- Remove and immediately recycle or dispose of used batteries according to local regulations and keep away from children. Do NOT dispose of batteries in household trash or incinerate.
- Even used batteries may cause severe injury or death.
- Call a local poison control center for treatment information.
- Non-rechargeable batteries are not to be recharged.
- Do not force discharge, recharge, disassemble, heat above (-20-70°C) or incinerate. Doing so may result in injury due to venting, leakage or explosion resulting in chemical burs.
- Ensure the batteries are installed correctly according to polarity (+ and -).
- Do not mix old and new batteries, different brands or types of batteries, such as alkaline, carbon-zinc, or rechargeable batteries.
- Remove and immediately recycle or dispose of batteries from equipment not used for an extended period of time according to local regulations.
- Always completely secure the battery compartment. If the battery compartment does not close securely, stop using the product, remove the batteries, and keep them away from children.
- Battery type: CR2032
- Battery nominal voltage: 3.0 V

(For other regions)



BATTERY WARNING



WARNING: Contains button or coin cell battery.

- **WARNING:** The battery is hazards and **KEEP OUT OF REACH OF CHILDREN** (Whether the battery is new or used).
  If the battery compartment(if applicable) does not close securely, stop using the product and keep it away from children.

- For appliances which contain coin or lithium batteries:

⚠ BATTERY WARNING	
KEEP OUT OF REACH OF CHILDREN. Swallowing can lead to chemical burns, perforation of soft tissue, and death. Severe burns can occur within 2 hours of ingestion. Seek medical attention immediately.	

- For appliances which contain button or non-lithium batteries.
  - The battery can cause serious injuries if it is swallowed or placed inside any part of the body.
  - If you think batteries might have swallowed or placed inside any part of the body, seek immediate medical attention.

Battery Performance

- For more durable batteries, it is recommended to turn off the power when not in use for a period of time.

Battery Disposal

- Do not dispose of batteries as unsorted municipal waste. Refer to local laws for proper disposal of batteries.
- Batteries may have a chemical symbol at the bottom of the disposal icon. This chemical symbol means that the battery contains a heavy metal that exceeds a certain concentration. An example is Pb: Lead (>0.004%).
- Appliances and used batteries must be treated in a specialized facility for reuse, recycling and recovery. By ensuring correct disposal, you will help avoid possible negative consequences for the environment and human health.

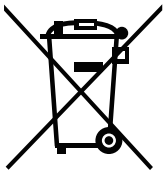

Pb

2. Installation accessory

Select the installation location

Don't install at the place where cover with heavy oil, vapor or sulfureted gas, otherwise, this product would be deformed that would lead to system malfunction.

Preparation before installation

1. Please confirm that all the following parts you have been supply.

No.	Name	Qty.	Remarks
1	Wire controller	1	————
2	Installation and owner's manual	1	————
3	Screws	3	M3.9*25 (For Mounting on the Wall)
4	Wall plugs	3	For Mounting on the Wall
5	Screws	2	M4X25 (For Mounting on switch box)
6	Plastic screw bars	2	For fixing on switch box
7	Battery	1	
8	The connective wires group	1	Optional
9	Screw	1	M4X8(For Mounting the connective wire group)

2. Prepare the following assemblies on the site.

No.	Name	Qty.(embeded into wall)	Specification (only for reference)	Remarks
1	Switch box	1	————	————
2	Wiring Tube(Insulating Sleeve and Tightening Screw)	1	————	————

1. This manual provides the installation method of wired controller. Please refer to the wiring diagram of this installation manual to connect the wire controller with indoor unit.
2. The wired controller works in low voltage loop circuit. Forbid to directly contact the cable of high voltage above, like 115V,220V,380V, and don't wire this kind of wire in the said loop; wiring clearance between configured tubes should be at the range of 300~500mm or above.
3. The Shielded wire of the wired controller must be grounded frmly.
4. Upon finish the wire controller connection, do not employed tramegger to detect the insulation.

3. Installation method

1.Wired remote controller structural dimensions

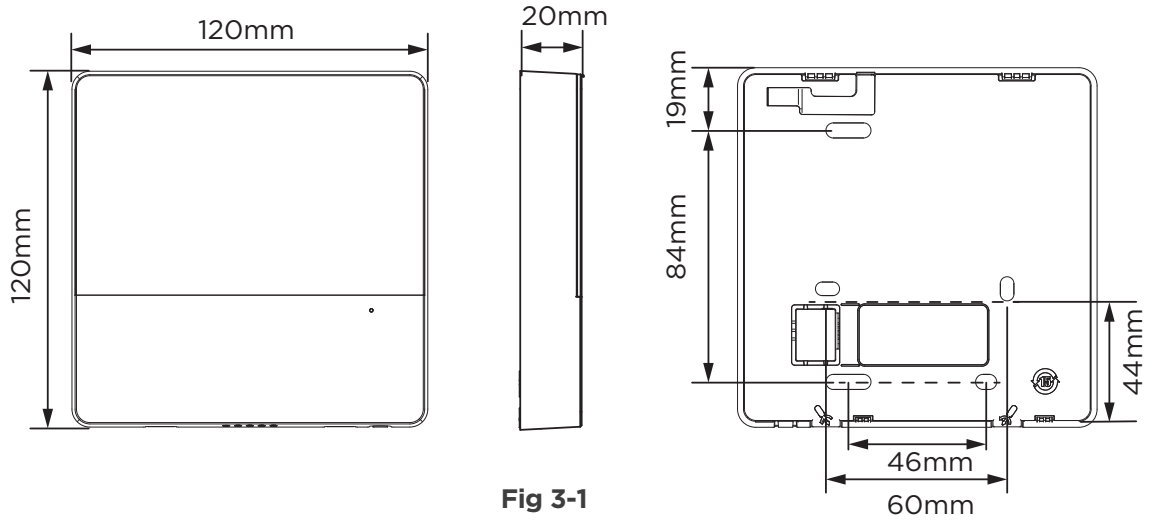

Fig 3-1

2.Remove the upper part of wired controller

Insert a slot screwdriver into the slots in the lower part of the wired controller (2 places), and remove the upper part of the wire controller. (Fig.3-2)

NOTE: Do not pry up and down, you can only rotate the screwdriver.

NOTE: The PCB is mounted in the upper part of the wired controller. Be careful not to damage the board with the slot screwdriver.

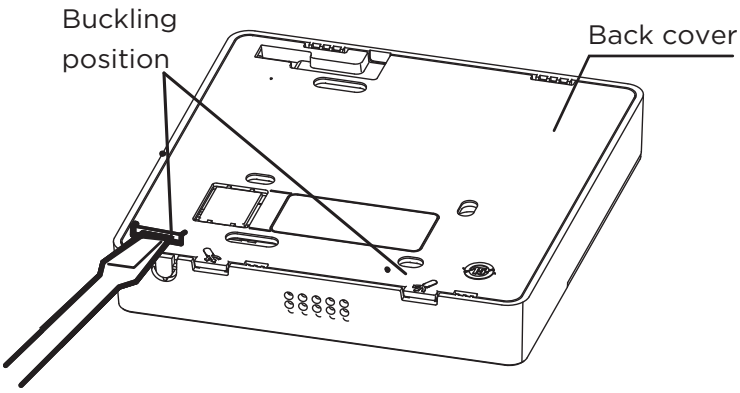

3. Fasten the back plate of the wired controller

For exposed mounting, fasten the back plate on the wall with the 3 screws (ST3.9*25) and plugs. (Fig.3-3)

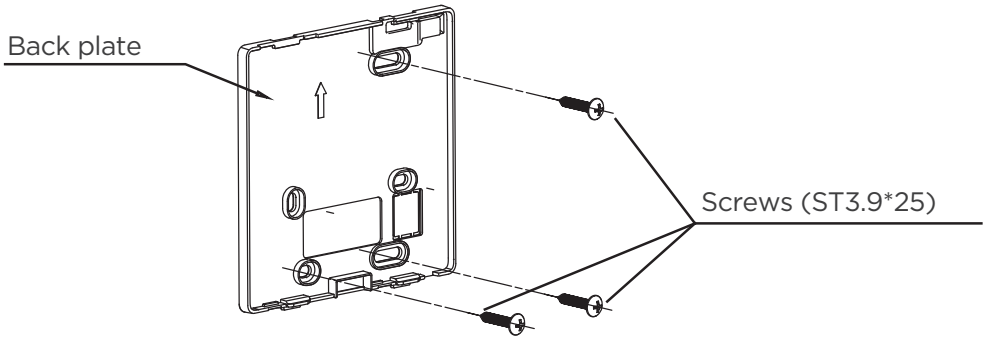

Fig 3-3

Use two M4X25 screws to install the back cover on the 86 switch box, and use one ST3.9*25 screw to fix to the wall.

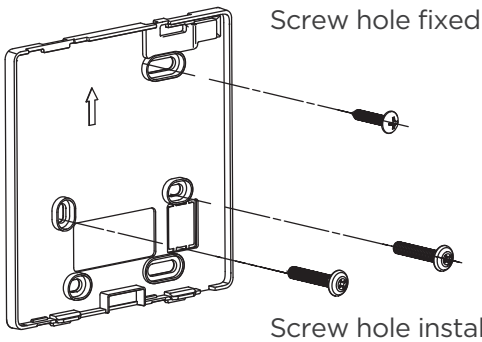

Screw hole fixed on the wall,useone ST3.9*25mm

Screw hole installed on 86 switch box, use two M4X25mm

Fig 3-4

NOTE: Put on a flat surface. Be careful not to distort the back plate of the wire controller by overtightening the mounting screws.

4. Battery installation

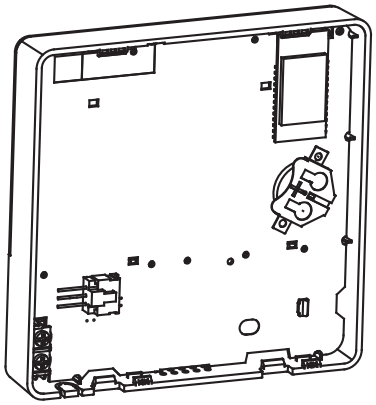

Fig 3-5

- Please contact professional technical after-sales service if the battery needs to be replaced.
- Put the battery into the installationsite and make sure the positive side of the battery is in accordance with the positive side of installationsite. (See Fig.3-5)
- Please set the time corrected on the first time operation. Batteries in the wire controller can time under power failure which ensure the time keep right. When the power restores, if the time displayed is not correct, it means the battery is dead and replace the battery.

5. Wire with the indoor unit

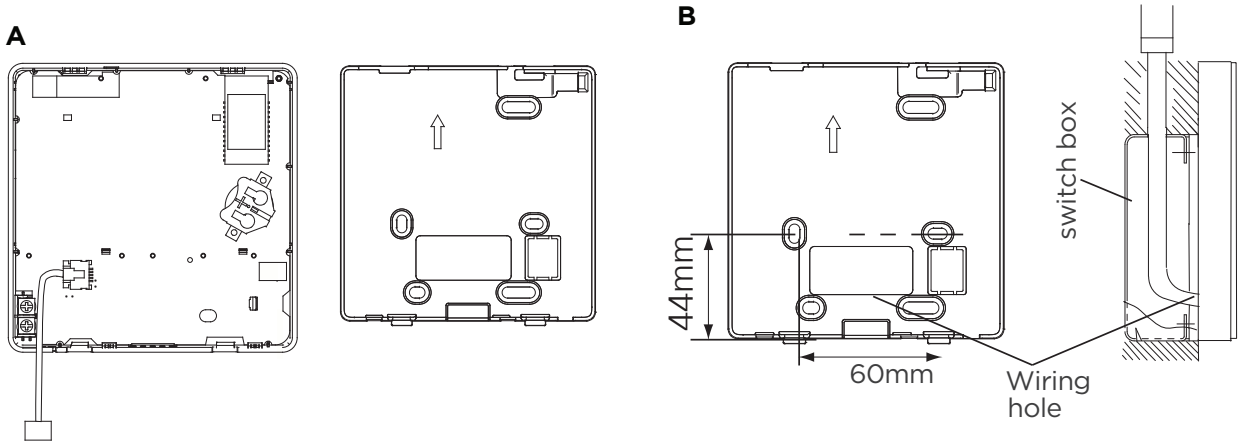

Model A

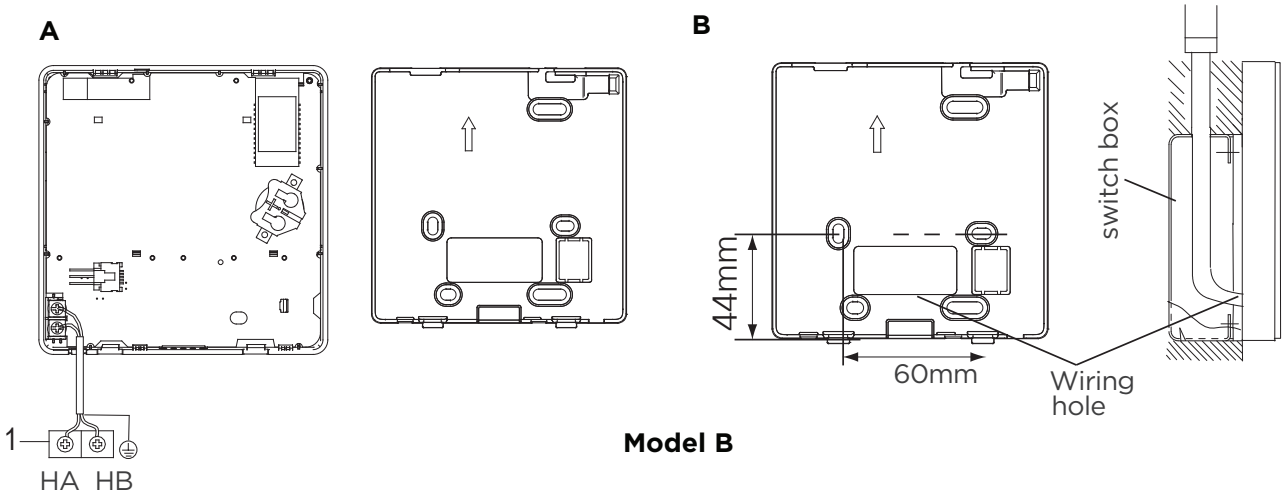

Model B

Fig 3-6

Model A

Connect the wire from the display panel of the indoor unit to a connecting cable. Then connect the other side of the connecting cable to the remote control.

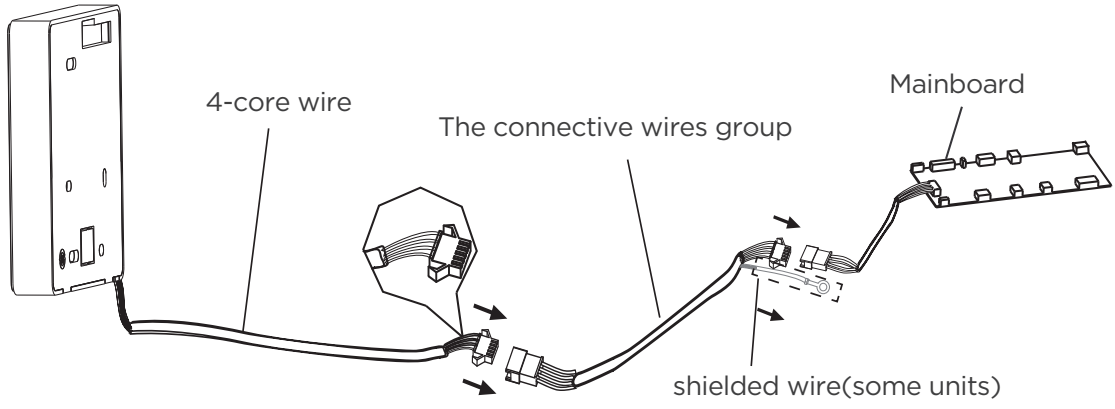

Applicable to Light Commercial air conditioner

Fig 3-7

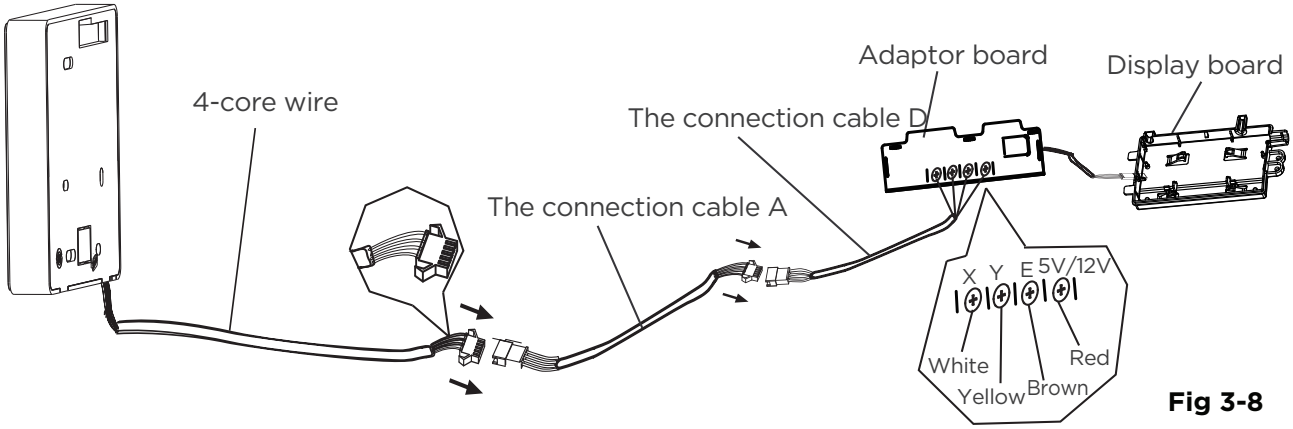

Applicable to split-type air conditioner

Fig 3-8

Model B

1 indoor unit

Notch the part for the wiring to pass through with nippers, etc.

Connect the terminals on the wired controller (HA ,HB), and the terminals of the indoor unit (HA ,HB). (HA and HB do not have polarity.)

NOTE:

- DO NOT allow water to enter the wired control. Use the trap and putty to seal the wires.
- Connecting wires must be fixed reliably and cannot be pulled.

For some units, the wired controller connects to the unit HA and HB ports through the HA and HB ports. There is no polarity between HA and HB. SeeFig. 3-9

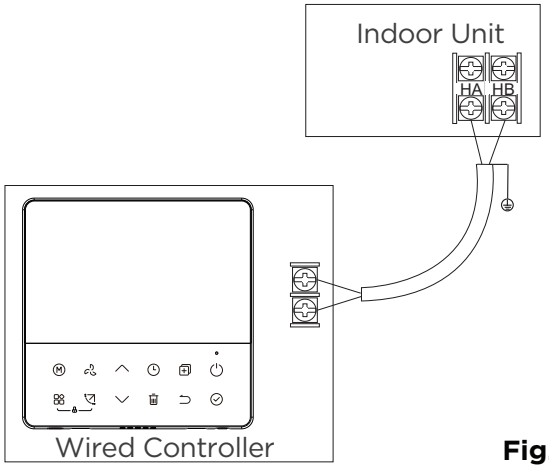

Fig.3-9

The main/secondary wired controller can be used to enable two wired controllers to control one unit, and the wired controllers connect to the unit HA and HB ports through the HA and HB port on the controller. There is no polarity between HA and HB. SeeFig. 3-10

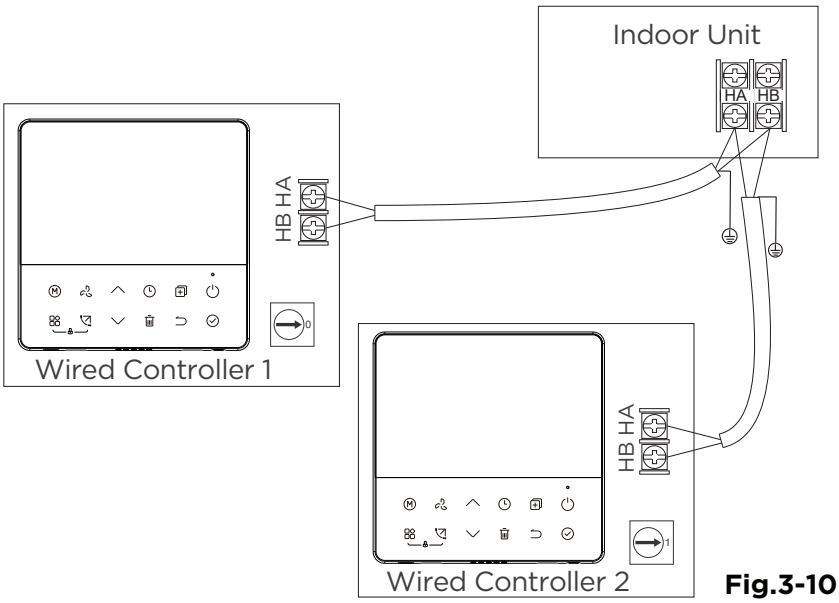

Fig.3-10

NOTE: Wire controller with WiFi function does not have this function.

For some units, one wired controller can support multiple units (a maximum of 16 units). In this case, the wired controller and unit need to be connected to the HA and HB ports at the same time. In group control, there will be no error displayed on the wired controller . SeeFig. 3-11

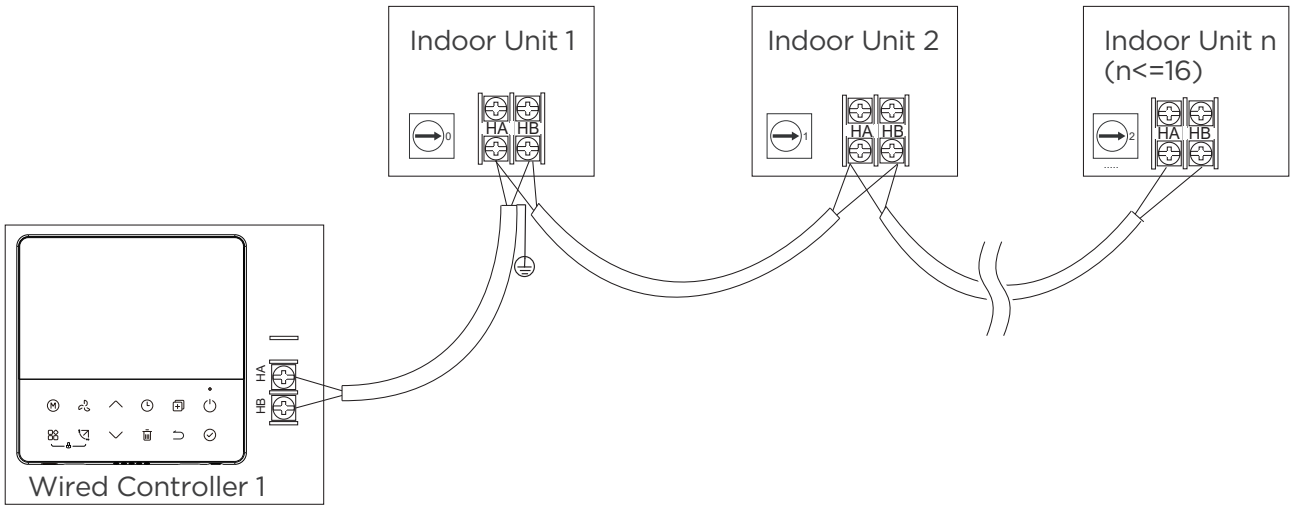

Fig.3-11

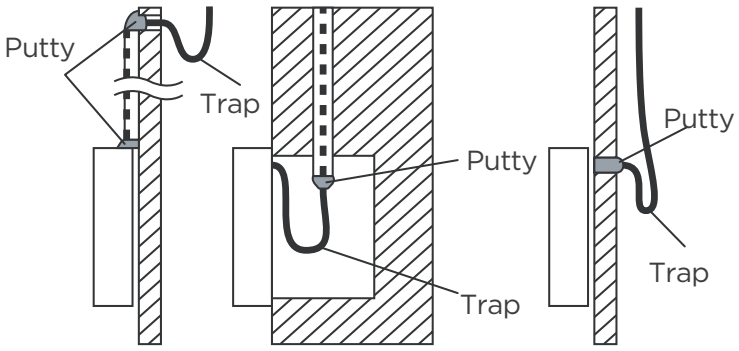

Fig 3-12

6. Reattach the upper part of the wired controller

After adjusting the upper case and then buckle the upper case; avoid clamping the wiring during installation. (Fig 3-13)

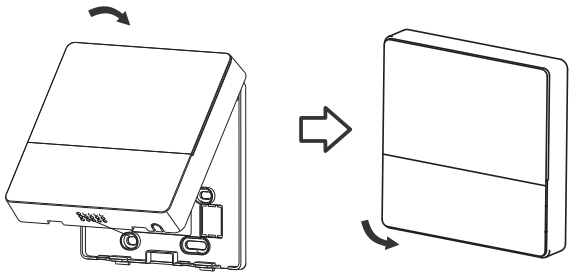

Fig 3-13

All the pictures in this manual are for explanation purpose only.
Your wire controller may be slightly different .The actual shape shall prevail.

4. Specification

Input voltage	12V
Ambient temperature	0~43°C(32~110°F)
Ambient humidity	Ambient humidity

Wiring specifications

NOTE: Suggested to use the connective wire of 6 meters length.

5. Feature and function of the wired controller

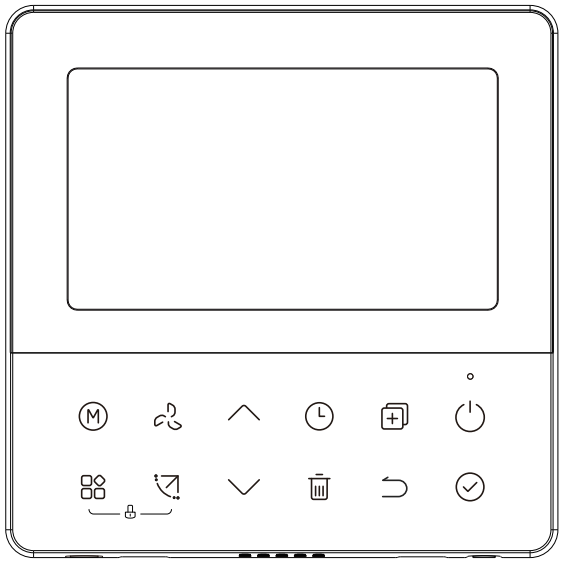

Feature:

- LCD display.
- Malfunction code display: it can display the error code, helpful for service.
- 4-way wire layout design, no raised part at backside, more convenient to place the wires and install the device.
- Room temperature display.
- Weekly Timer.

Function:

- Mode: Choose Auto-Cool-Dry- Heat -Fan
- Fan speed: Auto/Low/ Med/High speed
- Swing(on some models)
- Timer ON/OFF
- Temp setting
- Weekly timer
- Follow me
- Turbo
- 24-hour System
- 12-hour System
- Auto-restart
- Individual louver control (on some models)
- Automatic airflow test
- Rotation&Back-up
- Dual Control
- Group Control
- Child Lock
- LCD display
- Clock

6. Name on the LCD of the wired controller

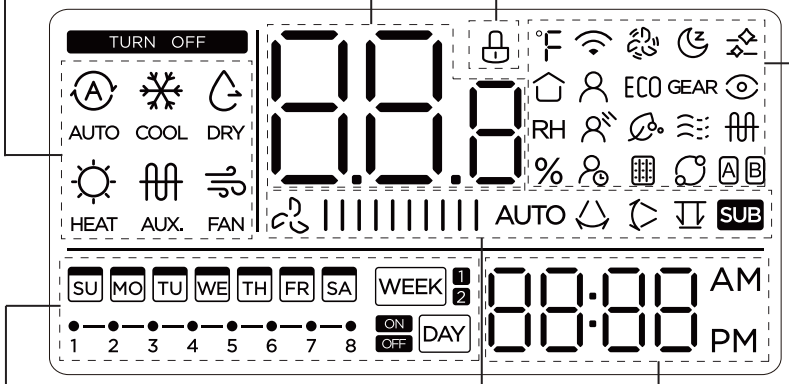

MODE display
Displays the current mode,including:
AUTO COOL DRY HEAT AUX. FAN

Temperature display

Lock display

Weekly Timer/ ON/Off Timer display

Clock display

FAN SPEED display
Displays selected fan speed:
LOW
MED
HIGH
AUTO AUTO

HORIZONTAL SWING display

VERTICAL SWING display

SUB Secondary unit display

°C / °F display

Room temperature display

RH Relative humidity display

Wireless control feature display

Follow me feature display

Breeze away display

Delay off display

Turbo feature display

ECO ECO feature display

Purify feature display

Filter reminder display

SLEEP feature display

GEAR GEAR feature display

Breezeless display

Rotation display

Active clean display

Intelligent eye display

Electric heating display

A B Main unit and secondary unit display

7. Name of button on the wired controller

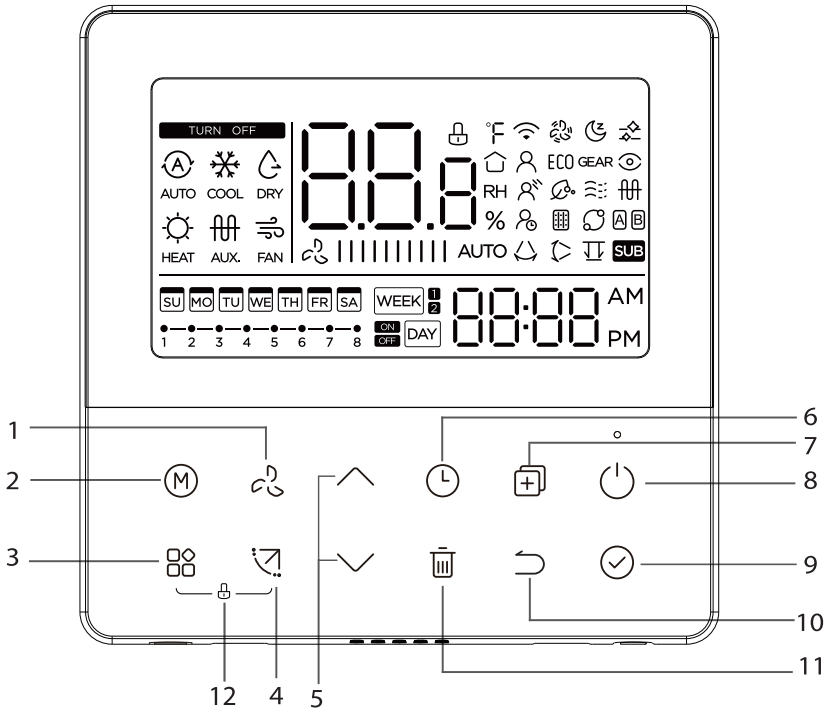

1 FAN SPEED button
2 MODE button
3 FUNC. button
4 SWING botton
5 ADJUST button
6 TIMER button
7 COPY button
8 POWER button
9 CONFIRM button
10 BACK botton
11 DAY OFF/DELAY button
12 CHILD LOCK button

8. Preparatory operation

Set the current day and time

1 

Press the Timer button for 2 seconds or more.
The timer display will flash.

---

2 

Press the button " ^ " or " v " to set the date.
The selected date will flash.



---

3 

The date setting is finished and the time setting is prepared after pressing Timer button or CONFIRM button or there is no pressing button in 10 seconds.

---

4 

Press the button " ^ " or " v " to set the current time.
Press repeatedly to adjust the current time in 1-minute increments.
Press and hold to adjust the current time continuous.

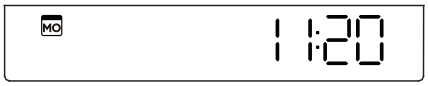

ex.Monday 11:20

5 

The setting is done after pressing CONFIRM button or there is no pressing button in 10 seconds.

6 

Time scale selection
Press the buttons " ⏲ " and " 🗑 " for 2 seconds will alternate the clock time display between the 12h & 24h scale.

9. Operation

To start/stop operation



Press the Power button.

8 degree heating function (on some models)



When the heating mode is 10°C(50°F)/16°C(60°F)/17°C (62°F)/20°C(68°F), press the down button twice within 1 second to turn on the 8 ° heating function, and press the Power, Mode, adjust , Fan speed, Timer, and Swing button to cancel the 8° heating function.

NOTE: For some models, the 8° heating function can only be set by remote control, you can not choose this function by wired controller.

9. Operation

To set the operation mode

Operation mode setting(Heat mode is invalid for cool only type unit)



Press this button to select the operation mode:

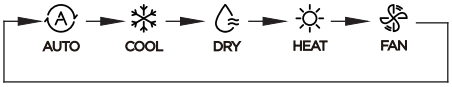

If the indoor unit has Electric heating(Emergent heating) feature, press this button to select the operation mode:

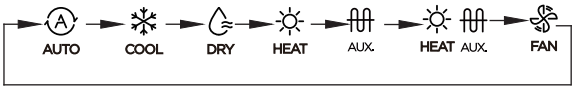

- When the mode is selected as emergency heating (or electric heating) mode, AUX. is displayed, the fan speed is Auto. The Sleep, 8-degree heating, Turbo, and Rotation functions are not available in emergency heating mode.
- When the mode is selected as heating & electric heating mode, HEAT AUX. is displayed, and the Turbo and Rotation functions are disable.

Room temperature setting



Press the button“ ^ ”or “ v ” to set the room temperature.
Indoor Setting Temperature Range :
10/16/17~30°C(50/60/62~86°F) or 20~28°C(68~82°F). (Model dependent)



°C & °F scale selection (on some models)
Press the buttons “ ^ ” and “ v ” for 3 seconds will alternate the temperature display between the °C & °F scale.

Fan speed setting



Press the Fan speed button to set the fan speed. (This button is unavailable under Auto or Dry mode)

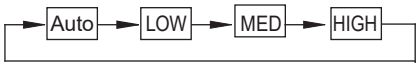

When stepless speed regulation is supported, press the fan speed key to cycle through:

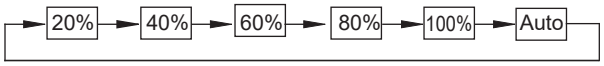



Press the buttons (M) and (fan) together for 3 seconds to turn on or turn off the keypad tone.

Child lock function

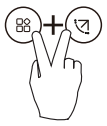

Press the buttons “ ” and “ ” for 3 seconds to activate the child lock function and lock all buttons on the wire controller.
You can't press the button to operate and receive the remote control signal after the child lock is activate.
Press these two buttons again for 3 seconds to deactivate the child lock function.
When the child lock function is activated, the” ”mark appears.

Swing function(For the units with horizontal & vertical swing features only)

1 Up-Down swing



Press the SWING button to start up-down swing function. The " " mark appears. Press it again to stop.

2 Left-Right swing

Press the Swing button for 2 seconds to start Left-Right swing function. The " " mark appears. Press it for 2 seconds again to stop.

Swing function(For the units without vertical swing function)



Use Swing button to adjust the Up-down airflow direction and start the auto swing function.

1.Each time you press this button, the louver swings an angle of 6 degrees.
Press this button until the desired direction reaches.
2.If press and hold the button for 2 seconds, the auto swing is activated.
The " " mark appears. Press it again to stop. (some units)

For the units with four Up-Down louvers, it can be operated individually.



1.Press the Swing button to activate the Up-Down adjusting louver function.
The mark will flash.(Not applicable to all the models)
2.Pressing the button " " or " " can select the movement of four louvers.Each time you push the button, the louver will be selected in a sequence as:
(-0 means the four louvers move at the same time.)

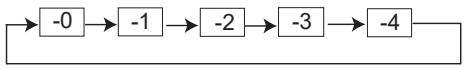

3. And then use Swing button to adjust the Up-Down airflow direction of the selected louver.



Press the FUNC. button to scroll through operation functions as followings:





[*]: Model dependent. If the indoor unit has no this function, it will not display.
The select function icon will flash, then press the Confrm button to confrm the setting.

Turbo function (on some models)



Under COOL/HEAT mode, press the FUNC. button to activate the turbo function. Press the button again to deactivate the turbo function. When the turbo function is activated,the " " mark appears.

PTC function (on some models)



In heating operation, for the units with electric heating feature, press this button to activate electric heating mode. When the PTC function is activated,the " "mark appears.

NOTE: The electric auxiliary heating function of the AHU model is switched by the MODE button , and the FUNC. button is a turbo function.

PTC function (on some models)

Press the FUNC. button to select whether the room temperature is detected at the indoor unit or the wire controller.

Intelligent eye display

1.This function is valid in any mode of power-on state.
2.When the indoor unit sending wire controller has the smart eye function, press the function key to select the smart eye icon, press the OK key to turn on the smart eye, and light up the smart eye icon at the same time; when the smart eye is turned off, the smart eye icon goes out.
3.Shutdown, switch mode, turn on self-cleaning, turn on 8-degree heating function will automatically cancel the smart eye function.

Filter reset function

After the indoor unit sends the wire controller flter usage time, the filter cleaning prompt icon lights up, press the function key to select the filter cleaning prompt icon, and press the OK key to reset the flter screen time. The filter cleaning reminder icon goes out.

Humidity setting function

1.When the indoor unit sending wire controller has dual control function of temperature and humidity, in dehumidification mode, press the function key to select the RH icon, press the confirm key to enter the humidity control mode, the RH icon flashes, press the up and down keys to adjust the humidity, the setting range is OFF->35%~85%, adjusted with 5% humidity. Exit humidity adjustment state after 5 seconds of inactivity.
2.After entering the humidity control mode, press the up and down keys to adjust the set temperature and display the set temperature for 5 seconds, and then restore the set humidity display.
3.After switching the mode, exit the humidity control mode.

GEAR function

1.When the indoor unit sending wire controller has the GEAR function, in the boot cooling mode, press the function key to select the GEAR icon, press the confirm key to enter the GEAR control mode, and first display the current GEAR status. 50%->75%->OFF can be switched by the up and down keys within 5 seconds. After 5 seconds, the set temperature will be displayed, press the up and down keys to adjust the set temperature.

Turn off, switch to mode or turn on sleep, ECO, strong, self-cleaning functions to cancel the GEAR function.

When the follow me function indicator appears,the room temperature is detected by the wire controller.

Press the button again to cancel the follow me function.

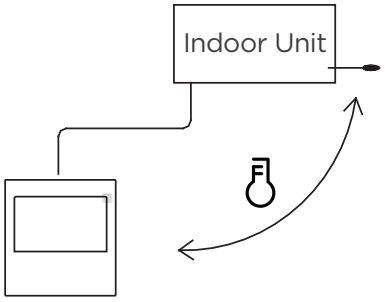

Rotation & Back-up indication

When there are two units, press the button to select the rotating function, and press “Confrm”to turn on or off the rotating function.
1. Press “Confrm” to set the rotating time,then press the button “ ∧”or “ ∨” to set time. Setting time Range :1~99h,the default time is 10 hours.
2. Step 2 set high temperature co-open temperature -- or 26~32 degrees -- that is, this function is invalid. When the ambient temperature is 26~32 degrees, when the ambient temperature is greater than or equal to the set temperature, the two machines will run 24 degrees at the same time in the COOL mode.
3. Step 3 set the low-temperature co-open temperature -- or 5-15 degrees -- that is, this function is invalid. When the ambient temperature is 5-15 degrees, when the ambient temperature is lower than the set temperature, the two units will run at the same time for 24 degrees to make the heating mode.
4. Step 4: set which machine will run first. Select A or B.
5. After this function is turned on, as long as the air conditioner is running at the setting hour, it will automatically turn on another air conditioner and turn off the current air conditioner. Press the POWER button to switch to another one immediately.A or B icons ficker to indicate the corresponding air conditioning failure. Automatically switch to another machine when running time is reached or machine failure occurs.

10. Timer functions

WEEK

WEEKLY timer
Use this timer function to set operating times for each day of the week.

ON DAY

On timer
Use this timer function to start air conditioner operation.
The timer operatesand air conditioner operation starts after the time has passed.

OFF DAY

Off timer
Use this timer function to stop air conditioner operation.
The timer operates and air conditioner operation stops after the time has passed.

ON OFF DAY

On and Off timer
Use this timer function to start and stop air conditioner operation.
The timer operates and air conditioner operation starts and stops after the time has passed.

To set the On or Off TIMER

1 

Press the Timer button to select the ON DAY or OFF DAY.

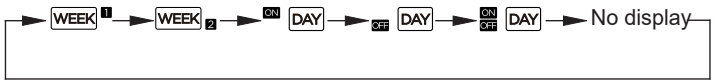

2 

Press the Confirm button and the Timer display is flashing.

3 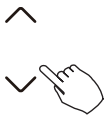



ex.Off timer set at 18:00

Press the button " ∧ " or " ∨ " to set the time.
After the time is set, the timer will start or stop automatically.

4 

Press the Confirm button again to finish the settings.

To set the On and Off TIMER

1 

Press the Timer button to select the ON OFF DAY.

2 

Press the Confirm button and the Clock display is flashing.

3 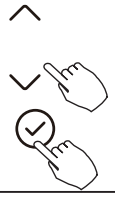

Press the button " ∧ " or " ∨ " to set the time of On timer,
and then press the Confirm button to confirm the setting.

4 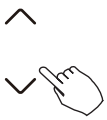

Press the button " ∧ " or " ∨ " to set the time of Off timer.

5 

Press the Confirm button to finish the settings.

NOTE: The secondary wired controller cannot set the timer.

11. Weekly Timer 1

1. Weekly timer setting



Press the Timer button to select the WEEK 1 and then press the Confirm button to confirm.

2. Day of the week setting



Press the button " ∧ " or " ∨ " to select the day of the week and then press the Confirm button to confirm the setting.



3. ON timer setting of timer setting 1

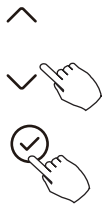

Press the button " ∧ " or " ∨ " to set the time of On timer and then press the Confirm button to confirm the setting.

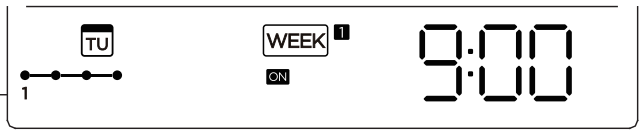

ex.Tuesday time scale 1

Up to 4 timer settings can be saved for each day of the week.
It is conventent if the WEEKLY TIMER is set according to the user's life style.

4. Off timer setting of timer setting 1



Press the button " ∧ " or " ∨ " to set the time of Off timer and then press the Confirm button to confirm the setting.



ex.Tuesday time scale 1

5. Different timer settings can be setted by repeating step 3 to 4.

6. Other days in one week can be setted by repeating step 2 to 5.

NOTE: The weekly timer setting can be returned to the previous step by pressing Back button.The time of timer setting can be delete by pressing Day off botton The current setting will be restored and withdrawn the weekly timer setting automatically when there is no operation for 30 seconds.

WEEKLY timer operation

To activate WEEKLY TIMER operation



Press the Timer button while WEEK 1 is displayed on the LCD.

ex.

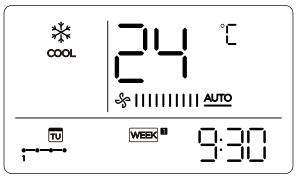

To deactivate WEEKLY TIMER operation



Press the Timer button while WEEK 1 is disappear from the LCD.

To turn off the air conditioner during the weekly timer



1. If press the Power button once and quickly , the air conditioner will turn off temporarily. And the air conditioner will turn on automatically until the time of On timer.

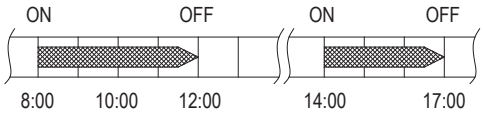

ex. If press the POWER button once and quickly at 10:00, the air conditioner will turn on at 14:00.

2. When press the Power button for 2 seconds , the air conditioner will turn off completely,at the same time cancel the timing function.

To set the DAY OFF (for a holiday)

1 

During the weekly timer, press the Confirm button.

2 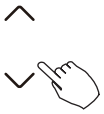

Press the button "∧" or "∨" to select the day in this week.

3 

Press the Day off button to set the DAY OFF.

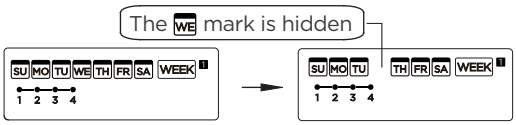

ex.The DAY OFF is set for Wednesday

4 The DAY OFF can be setted for other days by repeating the steps 2 and 3.

5 

Press the Back button to back to the weekly timer.

To cancel: Follow the same procedures as those for setup.

NOTE: The DAY OFF setting is cancelled automatically after the set day has passed.

DELAY function

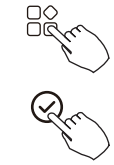

During the weekly timer, press the FUNC. button , select the delay function and press the Confirm button,display" 0h " " 1h "" 2h " and wait 3 seconds to confirm.
When the delay function is activated,the " " mark appears.
The delay function can only be enabled in Weekly Timer 1 and Weekly Timer 2.

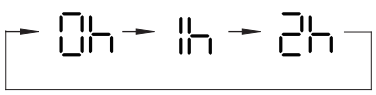

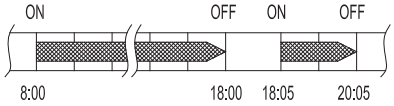

ex. If press select " 2h " at 18:05, the air conditioner will delay to turn off at 20:05.

Copy out the setting in one day into the other day.

A reservation made once can be copied to another day of the week. The whole reservation of the selected day of the week will be copied. The effective use of the copy mode ensures ease of making reservations.

1		During the weekly timer, press the Confirm button.
2	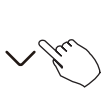	Press the button " ∧ " or " ∨ " to select the day to copy from.
3		Press the Copy button,the letter "CY" will be shown on the LCD.
4	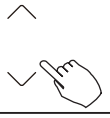	Press the button " ∧ " or " ∨ " to select the day to copy to.
5	 The WE mark flashes quickly	Press the Copy button to confirm . 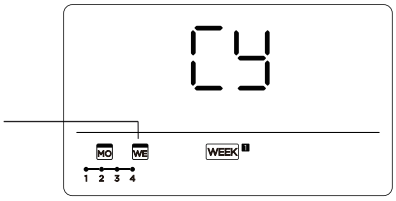 ex. Copy the setting of Monday to Wednesday
6		Other days can be copied by repeating step 4 and 5.
7		Press the Confirm button to confirm the settings.
8		Press the Back button to back to the weekly timer.

12. Weekly Timer 2

1. Weekly timer setting

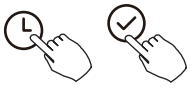

Press Timer to select the WEEK 2 and press Confirm.

2. Day of the week setting



Press " ﹀ " or " ﹀ " to select the day of the week and then press CONFIRM.



3. ON timer setting of timer setting 1



Press " ﹀ " or " ﹀ " to select the setting time. The setting time, mode, temperature and fan speed appear on the LCD. Press CONFIRM to enter the setting time process.

IMPORTANT: Up to 8 scheduled events can be set on one day.
Various events can be scheduled in either MODE, TEMPERATURE and FAN speeds.

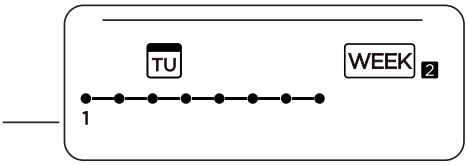

ex.Tuesday time scale 1

4. Time setting

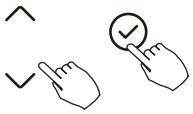

Press " ﹀ " or " ﹀ " to set the time, then press CONFIRM.

5. Operation mode setting

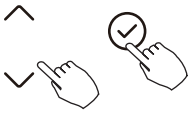

Press " ﹀ " o r " ﹀ " to set the operation mode then press CONFIRM.

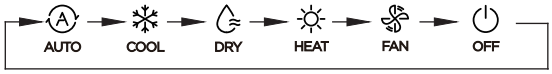

6. Room temperature setting

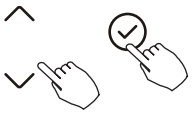

Press " ﹀ " or " ﹀ " to set the room temperature,then press CONFIRM.

NOTE: This setting is unavailable in the FAN or OFF modes.

7. Fan speed setting

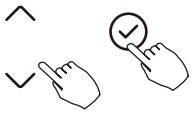

Press " ﹀ " or " ﹀ " to set the fan speed then press CONFIRM.

NOTE: This setting is unavailable in the AUTO, DRY or OFF modes.

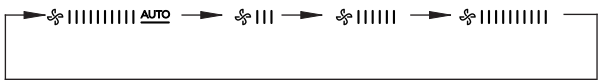

8. Different scheduled events can be set by repeating steps 3 through 7.

9. Additional days, in a one week period, can be set by repeating steps 3 through 8.

NOTE: The weekly timer setting can be returned to the previous step by pressing BACK. The current setting is restored.
The controller will not save the weekly timer settings if there is no operation within 30 seconds.

WEEKLY timer operation

To start — Press Timer to select the WEEK 2 , and then the timer starts automatically.



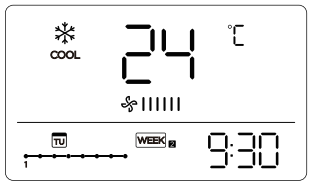

ex.

To cancel



Press the Power buttons for 2 seconds to cancel the timer mode.



The timer mode can also be canceled by changing the timer mode using Timer.

To set the DAY OFF (for a holiday)

1 

After setting the weekly timer, press CONFIRM.

2 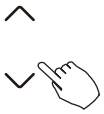

Press " ∧ " or " ∨ " to select the day of the week.

3 

Press DAY OFF to create an off day.

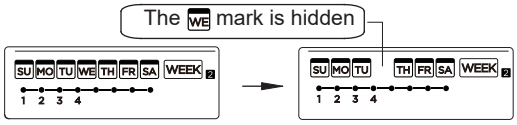

ex.The DAY OFF is set for Wednesday

4 Set the DAY OFF for other days by repeating the steps 2 and 3.

5 

Press BACK to revert to the weekly timer.

To cancel, follow the same procedures used for setup.

NOTE: The DAY OFF setting is cancelled automatically after the set day has passed.

Copy out the setting in one day into the other day.

A scheduled event, made once, can be copied to another day of the week.
The scheduled events of the selected day of the week will be copied. The effective use of the copy mode ensures the ease of reservation making.

1 

In the weekly timer, press CONFIRM.

2 

Press " ∧ " or " ∨ " to select the day to copy from.

3 

Press COPY, the letters CY appear on the LCD.

4 

Press " ∧ " or " ∨ " to select the day to copy to.

5	 The WE mark flashes quickly	Press COPY to confirm. 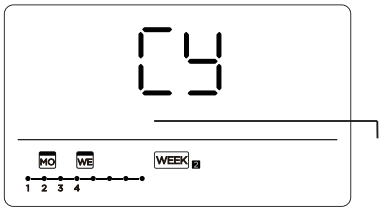 ex. Copy the setting of Monday to Wednesday
6		Other days can be copied by repeating steps 4 and 5.
7		Press CONFIRM to confirm the settings.
8		Press BACK to revert to the weekly timer.

Delete the time scale in one day.

1		During the weekly timer setting, press CONFIRM.
2		Press " ∧ " or " ∨ " to select the day of the week and then press CONFIRM.
3		

Press " ∧ " or " ∨ " to select the setting time want to delete. The setting time, mode, temperature and fan speed appear on the LCD. The setting time, mode, temperature and fan speed can be deleted by pressing the DEL (day of).

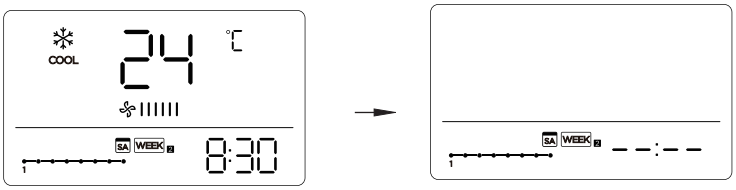

ex. Delet the time scale 1 in saturday

13. Fault alarm handing

If the system does not properly operate except the above mentioned cases or the above mentioned malfunctions is evident, investigate the system according to the following procedures.

NO.	MALFUNCTION & PROTECTION DEFINE	DISPLAY DIGITAL TUBE
1	Error of communication between wire controler and indoor unit	EH63

The error displayed on the wire controller are different from those on the unit. If error code appears, please check the <<Owner's And Installation Manual>>and<<SERVICE Manu-al>>.

14.Technical indication and requirement

EMC and EMI comply with the CE certification requirements.

15.Queries and settings



When the air conditioning unit is switch machine, Long press "COPY" for 3 seconds , first display P:00, if connected to an indoor unit, display P:00, if connected to multiple indoor units, press " ∧ "or " ∨ "to display P:01, P:02, and then press "Confirm" to enter the query indoor unit Tn(T1~T4) temperature and fan fault(CF), press" ∧ "or " ∨ "to select.



Not operating keys 15 seconds or press "Back" or press "ON/OFF"drop out of query temperature.

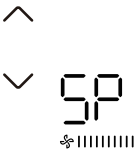

When the air conditioning unit is off, into the query function of temperature, press" ∧ " or " ∨ "to select SP, press "Confrm" to adjust the static pressure value.



When the air conditioning unit is off, into the query function of temperature, press " ∧ "or " ∨ "to select AF, press "Confirm" into test mode, press "Back" or press "ON/OFF" or press "Confirm"drop out of test mode.In AF mode, 3~6 minutes test completion automatically exits, if the test process, press "Back" or press "ON/OFF" or press "Confrm" , the test exits will be interrupted.

Follow me function temperature compensation

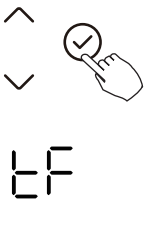

When the air conditioning unit is off, into the query function of temperature, press " ∧ "or " ∨ "to select tF.
The compensation temperature Range : -5~5°C.
Press "Confirm" into setting state, press" ∧ "or " ∨ "to select the temperature, then press "Confirm" to complete it.

tF : compensation temperature

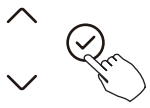

When the air conditioning unit is off, into the query function of temperature, press " ∧ "or " ∨ "to select tyPE.
Press "Confirm" into setting state, press" ∧ "or " ∨ "to select the type, then press "Confirm" to complete it.

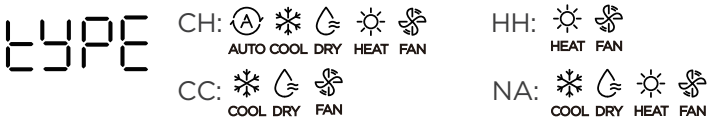

Set the highest and lowest temperature values

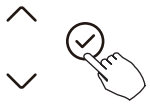

When the air conditioning unit is off, into the query function of temperature, press " ∧ "or " ∨ "to select tHI or tLo.
Press "Confirm" into setting state, press" ∧ "or " ∨ "to select the temperature, then press "Confirm" to complete it.
The highest setting temperature range : 25~30°C
The lowest setting temperature range: 17 ~24°C.



tHI : Highest value setting function.

tLO : Minimum value setting function.

Remote control function selection of wire controller

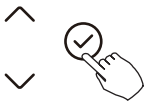

When the air conditioning unit is off, into the query function of temperature, press " ∧ "or " ∨ "to select rEC. ON or OF will be displayed in the temperature area to indicate whether it is valid or invalid.



When the selection is invalid, the wire controller does not process any remote control signals.
Press "Confirm" into setting state, press" ∧ "or " ∨ "to select , then press "Confirm" to complete it.

Two - line controller address selection



When the air conditioning unit is off, into the query function of temperature, press " ∧ "or " ∨ "to select Adr, the temperature zone will display -- or A, B. Where -- refers to the code setting of the wirecontroller.

Press "Confirm" into setting state, press" ∧ "or " ∨ "to select , then press "Confirm" to complete it.



-- : The code setting ⊖ of the wire controller shall prevail.

Adr : The wire controller address setting.

Restore factory Settings



When the air conditioning unit is off, into the query function of temperature, press " ∧ "or " ∨ "to select INIt, the temperature zone displayed --.

Press "Confirm" into setting state, press" ∧ "or " ∨ "to select to "ON" , then press "Confirm" to complete it.



INIt : Restore factory Settings .

After the wire controller resumes the factory parameter setting, the rotating parameter setting is restored to 10 hours (the highest and lowest temperature are not set); The compensation of body temperature is uncompensated; COOL and HEAT/single COOL mode is restored to COOL and HEAT model;
Restore the temperature range to the factory setting.
Remote receiving function is restored to be effective;
The address of the two-control frst-line controller is restored to the code switch.

16.Wireless control connection

SAFETY PRECAUTION

- Read the safety precautions carefully before installing the unit.
- Stated below are important safety issues that must be obeyed.
  Applicable system: IOS, Android. (Suggest:IOS 9 and above, Android 6.0 and above)

NOTE: Due to special situation may be occured, we explicitly claim below: Not all of the Andriod and IOS systems are compatible with APP. We will not be responsible for any issues as a result of the incompatibility.

SAFETY PRECAUTION

Smart kit only support WPA-PSK/WPA2-PSK encryption and none encryption . WPA-PSK/WPA2-PSK encryption is recommended.

⚠ CAUTION

- Please Check The Service Website For More Information.
- Smart Phone camera needs to be 5 million pixels or above to make sure scan QR code well.
- Due to different network situation, sometimes, request time-out could happen, thus, it is necessary to do network confguration again.
- Due to different network situation, control process may return time-out sometimes. If this situation occurs, the display between board and App may not be the same, please do not feel confused.

NOTE: Company will not be liable for any issues and problems caused by Internet, Wi-Fi Router and Smart Devices.
Please contact the original provider to get further help.

DOWNLOAD AND INSTALL APP

On an app market (Google Play Store, Apple App Store), search for "MSmartHome" and find the MSmartHome app. Download and install it on your phone, You can also download the app by scanning the QR code below.







- Please ensure your mobile device is connected to Wireless Network router. Also, the Wireless Network router has already connected to Internet before doing user registration and network configuration.
- Make sure your mobile device has already been connected to the Wireless Network which you want to use. Also, you need to forget other irrelative Wireless Network in case it influences your cofiguration process.

NETWORK CONFIGURATION

⚠ CAUTION

- It is necessary to forget any other around network and make sure the Android or IOS device just connect to the Wireless Network you want to configure.
- Make sure the Android or IOS device Wireless Network function works well and can be connected back to your original Wireless Network network automatically.

How to enter AP distribution network

Press the FUNC. button until the icon is selected and then press the CONFIRM buttton. AP mode is activiated if the icon is blinked.

Register and log in

Open the MSmartHome app, and create a new account to start (you can also register through a third-party account). If you already had an existing account, use the account to log in.

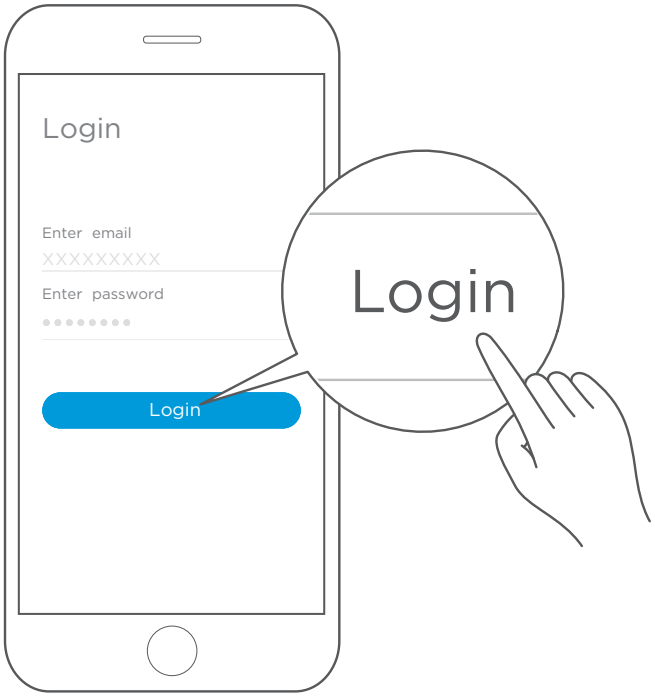

Connect your devices to MSmartHome

1. Please make sure your mobile phone is connected to Wireless Network. If not, go to Settings and turn on the wireless connection, select and connect to a Wireless Network. Also please turn on the Bluetooth on your phone. If not, go to Settings and turn it on.
2. Please power on your devices.
3. Open MSmartHome app on your phone.
4. If a message of "Smart devices discovered nearby" appears, click to add.

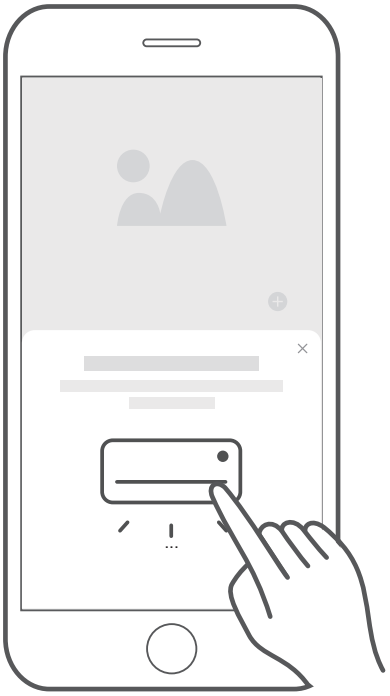

5. If no message appears, select "+" on the page and select your device in the list of nearby devices available. If your device is not listed, please add your device manually by the device category.

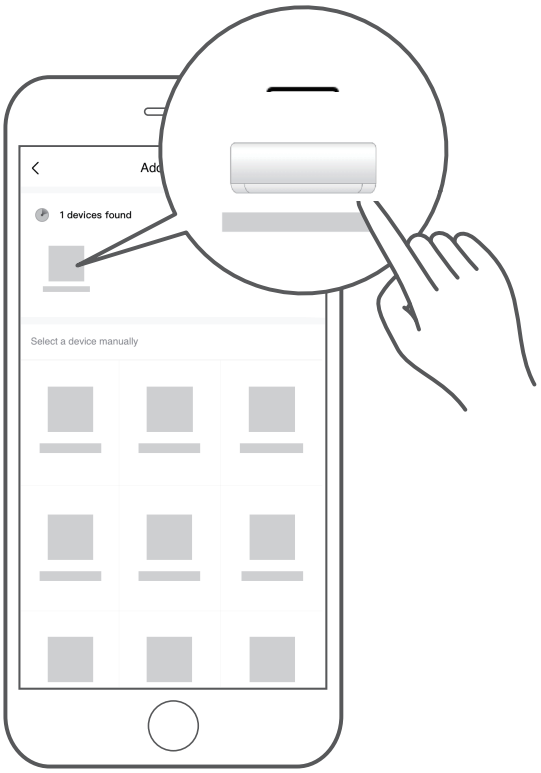

6. Connect your device to Wireless Network according to the instructions on app. If the connection fails, please follow the instructions provided by the app to continue with the operation.



NOTE:

- Make sure your devices are powered on.
- Keep your mobile phone close enough to your device when you are connecting network to your device.
- Connect your mobile phone to the wireless network at home, and make sure you know the password of the Wireless Network.
- Check if your router supports 2.4 GHz Wireless Network band and turn it on. If you are not sure whether the router supports 2.4 GHz band, please contact the router manufacturer.
- The device cannot connect to the Wireless Network that requires authentication, and it usually appears in public area such as hotels, restaurants, etc. Please connect to a Wi-Fi that does not require authentication.
- It is recommended to use a Wireless Network name that only contains letters and numbers. If your Wireless Network name contains special characters, please modify it in the router.
- Turn off the WLAN+ (Android) or WLAN Assistant (iOS) function of your mobile phone when connecting network to your devices.
- In the case that your device connected to Wireless Network before but it needs to reconnect, please click "+" on app Home page, and add your device again by the device category and model according to the instructions on app.

APP DECLARATION

Hereby, we declare that this Smart kit is in compliance with the essential requirements and other relevant provisions of Directive 2014/53/EU.
A copy of the full DoC is attached.(European Union products only)

CAUTIONS:

WirelessNetwork module models: US-SK107，EU-SK107:

FCC ID: 2ADQOMDNA21
IC: 12575A-MDNA21
This device complies with Part 15 of the FCC Rules and it contains licence-exempt transmitter(s)/receiver(s) that comply with Innovation, Science and Economic Development Canada's licence-exempt RSS(s).
Operation is subject to the following two conditions:
(1) This device may not cause interference;and
(2) This device must acceptany interference,including interference that may cause undesired operation of the device.
Only operate the device in accordance with the instructions supplied.
Changes or modifications to this unit not expressly approved by the party responsible for compliance could void the user's authority to operate the equipment.
This device complies with FCC radiation exposure limits set forth for an uncontrolled environment. In order to avoid the possibility of exceeding the FCC radio frequency exposure limits, human proximity to the antenna shall not be less than 20cm (8 inches) during normal operation.

NOTE: This equipment has been tested and found to comply with the limits for a Class B digital device, pursuant to part 15 of the FCC Rules.
These limits are designed to provide reasonable protection against harmful interference in a residential installation. This equipment generates, uses and can radiate radio frequency energy and, if not installed and used in accordance with the instructions, may cause harmful interference to radio communications. However, there is no guarantee that interference will not occur in a particular installation. If this equipment does cause harmful interference to radio or television reception, which can be determined by turning the equipment off and on, the user is encouraged to try to correct the interference by one or more of the following measures:
--Reorient or relocate the receiving antenna.
--Increase the separation between the equipment and receiver.
--Connect the equipment into an outlet on a circuit different from that to which the receiver is connected.
--Consult the dealer or an experienced radio/TV technician for help.

Breezeless function of dip switch.

NTOE: This feature is only available under cool mode.
This feature is for some models.

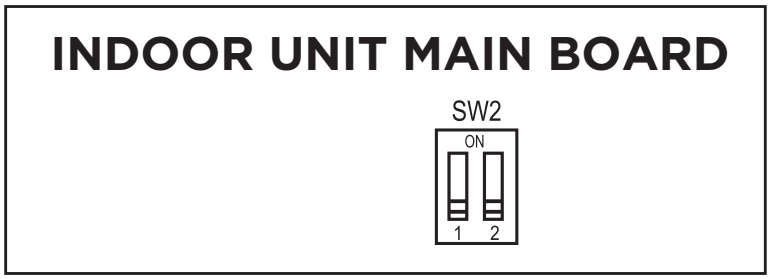

SW2 has 2 dip switch: SW2-1 and SW2-2

SW2-2 is to control the breezeless function.

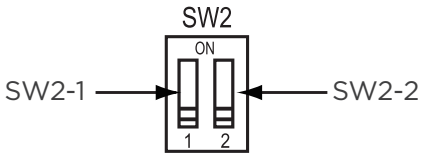

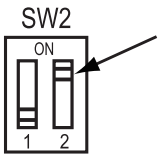

SW2-2 dip switch to be “ON”,turn on the breezeless.

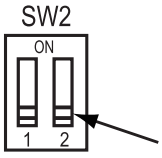

SW2-2 dip switch to be “OFF”,turn off the breezeless.

CARE AND MAINTENANCE

⚠ CAUTION

Cleaning Your Indoor Unit

- Always **TURN OFF** your AC system and disconnect its power supply before cleaning or maintenance.
- Only use a soft, dry cloth to wipe the unit clean. You can use a cloth soaked in warm water to wipe it clean if the unit is especially dirty.
- Do not use chemicals or chemically treated cloths to clean the unit
- Do not use benzene, paint thinner, polishing powder or other solvents to clean the unit. They can cause the plastic surface to crack or deform.
- Do not use water hotter than 40°C (104°F) to clean the front panel. This can cause the panel to deform or become discolored.
- Before changing the filter or cleaning, turn off the unit and disconnect its power supply. Removal and maintenance must be performed by a certified technician.
- When removing filter, do not touch metal parts in the unit. The sharp metal edges can cut you.
- Do not use water to clean the inside of the indoor unit. This can destroy insulation and cause electrical shock.
- Do not expose filter to direct sunlight when drying. This can shrink the filter.
- Any maintenance and cleaning of outdoor unit should be performed by an authorized dealer or a licensed service provider.
- Any unit repairs should be performed by an authorized dealer or a licensed service provider.

Maintenance your AC.

Maintenance – Long Periods of Non-Use

If you plan not to use your air conditioner for an extended period of time, do the following:

Turn off the unit and disconnect the power

Turn on FAN function until unit dries out completely

Maintenance – Pre-Season Inspection

After long periods of non-use, or before periods of frequent use, do the following:

Check for damaged wires

Check for leaks



Make sure nothing is blocking all air inlets and outlets

TROUBLESHOOTING

⚠ CAUTION

If any of the following conditions occurs, turn off your unit immediately!

- The power cord is damaged or abnormally warm
- You smell a burning odor
- The unit emits loud or abnormal sounds
- A power fuse blows or the circuit breaker frequently trips
- Water or other objects fall into or out of the unit

DO NOT ATTEMPT TO FIX THESE YOURSELF! CONTACT AN AUTHORIZED SERVICE PROVIDER IMMEDIATELY.

Common Issues

The following problems are not a malfunction and in most situations will not require repairs.

Issue	Possible Causes
Unit does not turn on when pressing ON/OFF button	The Unit has a 3-minute protection feature that prevents the unit from overloading. The unit cannot be restarted within three minutes of being turned off.
	Cooling and Heating Models: If the Operation light and PRE-DEF (Pre-heating/ Defrost) indicators are lit up, the outdoor temperature is too cold and the unit's anti-cold wind is activated in order to defrost the unit.
	In Cooling-only Models: If the "Fan Only" indicator is lit up, the outdoor temperature is too cold and the unit's anti-freeze protection is activated in order to defrost the unit.
The unit changes from COOL/HEAT mode to FAN mode	The unit may change its setting to prevent frost from forming on the unit. Once the temperature increases, the unit will start operating in the previously selected mode again.
	The set temperature has been reached, at which point the unit turns off the compressor. The unit will continue operating when the temperature fluctuates again.
The indoor unit emits white mist	In humid regions, a large temperature difference between the room's air and the conditioned air can cause white mist.
Both the indoor and outdoor units emit white mist	When the unit restarts in HEAT mode after defrosting, white mist may be emitted due to moisture generated from the defrosting process.
The indoor unit makes noises	A rushing air sound may occur when the louver resets its position.
	A squeaking sound is heard when the system is OFF or in COOL mode. The noise is also heard when the drain pump (optional) is in operation.
	A squeaking sound may occur after running the unit in HEAT mode due to expansion and contraction of the unit's plastic parts.
Both the indoor unit and outdoor unit make noises	Low hissing sound during operation: This is normal and is caused by refrigerant gas flowing through both indoor and outdoor units.
	Low hissing sound when the system starts, has just stopped running, or is defrosting: This noise is normal and is caused by the refrigerant gas stopping or changing direction.
	Squeaking sound: Normal expansion and contraction of plastic and metal parts caused by temperature changes during operation can cause squeaking noises.

Issue	Possible Causes
The outdoor unit makes noises	The unit will make different sounds based on its current operating mode.
Dust is emitted from either the indoor or outdoor unit	The unit may accumulate dust during extended periods of non-use, which will be emitted when the unit is turned on. This can be mitigated by covering the unit during long periods of inactivity.
The unit emits a bad odor	The unit may absorb odors from the environment (such as furniture, cooking, cigarettes, etc.) which will be emitted during operations.
	The unit's filters have become moldy and should be cleaned.
The fan of the outdoor unit does not operate	During operation, the fan speed is controlled to optimize product operation.

NOTE: If problem persists, contact a local dealer or your nearest customer service center. Provide them with a detailed description of the unit malfunction as well as your model number.

When troubles occur, please check the following points before contacting a repair company.

Problem	Possible Causes	Solution
Poor Cooling Performance	Temperature setting may be higher than ambient room temperature	Lower the temperature setting
	The heat exchanger on the indoor or outdoor unit is dirty	Clean the affected heat exchanger
	The air filter is dirty	Remove the filter and clean it according to instructions
	The air inlet or outlet of either unit is blocked	Turn the unit off, remove the obstruction and turn it back on
	Doors and windows are open	Make sure that all doors and windows are closed while operating the unit
	Excessive heat is generated by sunlight	Close windows and curtains during periods of high heat or bright sunshine
	Too many sources of heat in the room (people, computers, electronics, etc.)	Reduce amount of heat sources
	Low refrigerant due to leak or long-term use	Check for leaks, re-seal if necessary and top off refrigerant

Problem	Possible Causes	Solution
The unit is not working	Power failure	Wait for the power to be restored
	The power is turned off	Turn on the power
	The fuse is burned out	Replace the fuse
	Remote control batteries are dead	Replace batteries
	The Unit's 3-minute protection has been activated	Wait three minutes after restarting the unit
	Timer is activated	Turn timer off
The unit starts and stops frequently	There's too much or too little refrigerant in the system	Check for leaks and recharge the system with refrigerant.
	Incompressible gas or moisture has entered the system.	Evacuate and recharge the system with refrigerant
	System circuit is blocked	Determine which circuit is blocked and replace the malfunctioning piece of equipment
	The compressor is broken	Replace the compressor
	The voltage is too high or too low	Install a manostat to regulate the voltage
Poor heating performance	The outdoor temperature is extremely low	Use auxiliary heating device
	Cold air is entering through doors and windows	Make sure that all doors and windows are closed during use
	Low refrigerant due to leak or long-term use	Check for leaks, re-seal if necessary and top off refrigerant
Indicator lamps continue flashing	The unit may stop operation or continue to run safely. If the indicator lamps continue to flash or error codes appear, wait for about 10 minutes. The problem may resolve itself. If not, disconnect the power, then connect it again. Turn the unit on. If the problem persists, disconnect the power and contact your nearest customer service center.	
Error code appears and begins with the letters as the following in the window display of indoor unit: • **E(x), P(x), F(x)** • **EH(xx), EL(xx), EC(xx)** • **PH(xx), PL(xx), PC(xx)**		

Troubleshoot Your Wireless Remote Control

Problem	Possible Causes	Solution
The fan speed cannot be changed.	Check whether AUTO mode is selected.	In AUTO mode, the fan speed is set automatically and cannot be changed.
	Check whether DRY mode is selected.	In DRY mode, the FAN SPEED button is ineffective. The fan speed can only be changed in COOL, FAN and HEAT mode.
The temperature display is off	Check whether FAN mode is selected.	In FAN mode, the temperature cannot be adjusted.
The TIMER OFF disappears after a period of time	If the TIMER OFF function was activated, the operation may have finished.	The air conditioner will automatically stop at the set time and the indicator light will turn off.
The TIMER ON indicator disappears after a period of time	If the TIMER ON function was activated,the operation may have finished.	The air conditioner will automatically start at the set time and the indicator light will turn off.
There is no sound when the ON/OFF button is pressed.	Check whether the signal transmitter of the remote control is properly directed towards the infrared signal receiver of the indoor unit.	Point the remote control directly at the receiver and press the ON/OFF button twice.

NOTE: If your problem persists after performing the checks and diagnostics above, turn off your unit immediately and contact an authorized service center.

Packing And Unpacking The Unit

Instructions for packing unpacking the unit:

Unpacking:
Indoor unit:
1.Cut the packing belt.
2. Unpack the package.
3. Take out the packing cushion and packing support.
4. Remove the packing film.
5. Take out the accessories.
6. Lift the machine out and lay it flat.

Outdoor Unit
1. Cut the packing belt.
2. Take the unit out of the package.
3. Remove the foam from the unit.
4. Remove the packing film from the unit.

Packing:
Indoor unit:
1. Put the indoor unit into the packing film.
2. Put the accessories in.
3. Place the packing cushion and packing support.
4. Put the indoor unit into the package.
5. Close the package and seal it.
6. Using the packing belt if necessary.

Outdoor unit:
1. Put the outdoor unit into the packing film.
2. Put the bottom foam into the box.
3. Put the outdoor unit into the package, then put the upper packaging foam on the unit.
4. Close the package and seal it.
5. Using the packing belt if necessary.

NOTE: Please keep all packaging items if you may need in the future.

Impedance Information

(Applicable to some countries of Middle East Area only)

To be in compliance EN 61000-3-11, the product MTIT-30CWN1-QC5 shall be connected only to a supply of the system impedance: $|Zsys|$ = 0.078 ohms or less. Before connect the product to public power network, please consult your local power supply authority to ensure the power network meet above requirement.

To be in compliance EN 61000-3-11, the product MOTD30U-24CN1-QC5 shall be connected only to a supply of the system impedance: $|Zsys|$ = 0.179 ohms or less. Before connect the product to public power network, please consult your local power supply authority to ensure the power network meet above requirement.

To be in compliance EN 61000-3-11, the product MHGT4-55CWN1-RC5 shall be connected only to a supply of the system impedance: $|Zsys|$ = 0.186 ohms or less. Before connect the product to public power network, please consult your local power supply authority to ensure the power network meet above requirement.

To be in compliance EN 61000-3-11, the product MHGT4-48CWN1-RC5 shall be connected only to a supply of the system impedance: $|Zsys|$ = 0.244 ohms or less. Before connect the product to public power network, please consult your local power supply authority to ensure the power network meet above requirement.

To be in compliance EN 61000-3-11, the product MOTCA30U-17N1-QC5 shall be connected only to a supply of the system impedance: $|Zsys|$ = 0.262 ohms or less. Before connect the product to public power network, please consult your local power supply authority to ensure the power network meet above requirement.

To be in compliance with EN61000-3-11, the product MHGT4-42CWN1-RC5 shall be connected only to a supply of the system impedance: $|Zsys|$ = 0.309 Ω or less. Before connecting the product to public power network, please consult your local power supply authority to ensure the power network meet a bove requirement.

To be in compliance with EN61000-3-11, the product MHGT4-48CWN1-RC5 shall be connected only to a supply of the system impedance: $|Zsys|$ = 0.246241 Ω or less. Before connecting the product to public power network, please consult your local power supply authority to ensure the power network meet above requirement.

TRADEMARKS, COPYRIGHTS AND LEGAL STATEMENT

Midea logo, word marks, trade name, trade dress and all versions thereof are valuable assets of Midea Group and/or its affiliates ("Midea"), to which Midea owns trademarks, copyrights and other intellectual property rights, and all goodwill derived from using any part of an Midea trademark. Use of Midea trademark for commercial purposes without the prior written consent of Midea may constitute trademark infringement or unfair competition in violation of relevant laws.

This manual is created by Midea and Midea reserves all copyrights thereof. No entity or individual may use, duplicate, modify, distribute in whole or in part this manual, or bundle or sell with other products without the prior written consent of Midea.

All the described functions and instructions were up to date at the time of printing this manual. However, the actual product may vary due to improved functions and designs.

DISPOSAL AND RECYCLING

Important instructions for environment(European Disposal Guidelines)

Compliance with the WEEE Directive and Disposing of the Waster Product:
This product complies with EU WEEE Directive. This product bears a classification symbol for waster electrical and electronic equipment (WEEE).

This symbol indicates that this product shall not be disposed with other household wastes at the end of its service life. Used device must be returned to official collection point for recycling of electrical electronic devices. To find these collection systems please contact to your local authorities or retailer where the product was purchased. Each household performs important role in recovering and recycling of old appliance. Appropriate disposal of used appliance helps prevent potential negative consequences for the environment and human health.

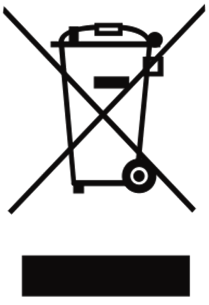

DATA PROTECTION NOTICE

For the provision of the services agreed with the customer,
we agree to comply without restriction with all stipulations of applicable data protection law, in line with agreed countries within which services to the customer will be delivered, as well as, where applicable, the EU General Data Protection Regulation (GDPR).

Generally, our data processing is to fulfil our obligation under contract with you and for product safety reasons, to safeguard your rights in connection with warranty and product registration questions. In some cases, but only if appropriate data protection is ensured, personal data might be transferred to recipients located outside of the European Economic Area.

Further information are provided on request. You can contact our Data Protection Officer via **MideaDPO@midea.com**. To exercise your rights such as right to object your personal date being processed for direct marketing purposes, please contact us via **MideaDPO@midea.com**. To find further information, please follow the QR Code.

Importer: MIDEA APPLIANCE AUSTRALIA

Manufacturer: GD Midea Air-Conditioning Equipment Co,.Ltd.
Lingang Road Beijiao Shunde Foshan Guangdong
People's Republic of China 528311

The design and specifications are subject to change without prior notice for product improvement. Consult with the sales agency or manufacturer for details. Any updates to the manual will be uploaded to the service website, please check for the latest version.

Midea

make yourself at home

www.midea.net.au

© Midea 2022 all rights reserved

QS003UI-T1
16123000A32201
20221104