MIDDLE STATIC PRESSURE DUCT TYPE AIR CONDITIONER

Owner’s Manual & Installation Manual

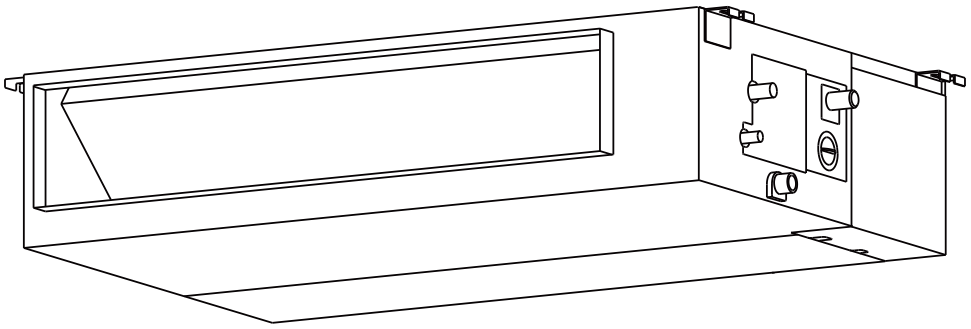

IMPORTANT NOTE:

Read this manual and SAFETY MANUAL(if any) carefully before installing or operating your new air conditioning unit. Make sure to save this manual for future reference.

Please check the applicable models, technical data, F-GAS(if any) and manufacturer information from the “Owner's Manual - Product Fiche ” in the packaging of the outdoor unit. (European Union products only)

Table of Contents

Safety Precautions 04

Owner's Manual

Unit Specifications and Features.....08

1. Indoor unit 08
2. Operating temperature.....09
3. Other features 10

Care and Maintenance.....11

Troubleshooting.....13

Installation Manual

Accessories.....16

Installation Summary.....17

Unit Parts.....18

Indoor Unit Installation.....19

1. Select installation location.....19
2. Hang indoor unit.....20
3. Duct and accessories installation.....22
4. Adjust the air inlet direction.....22
5. Fresh air duct installation.....23
6. Motor and drain pump maintenance.....23
7. Drill wall hole for connective piping.....23
8. Connect drain hose.....24

Outdoor Unit Installation.....26

1. Select installation location.....26
2. Install drain joint.....27
3. Anchor outdoor unit.....27

Refrigerant Piping Connection.....29

A. Note on Pipe Length.....29

B. Connection Instructions –Refrigerant Piping.....30

   1. Cut pipe.....30
   2. Remove burrs.....30
   3. Flare pipe ends.....31
   4. Connect pipes.....31

Wiring.....32

1. Outdoor Uint Wiring.....34
2. Indoor Uint Wiring.....34
3. Power Specifications.....35

Air Evacuation.....37

1. Evacuation Instructions.....37
2. Note on Adding Refrigerant.....38

Test Run.....39

Packing and unpacking the unit 40

Safety Precautions

Read Safety Precautions Before Operation and Installation

Incorrect installation due to ignoring instructions can cause serious damage or injury.
The seriousness of potential damage or injuries is classified as either a **WARNING** or **CAUTION**.

⚠ WARNING
This symbol indicates the possibility of personnel injury or loss of life.

⚠ CAUTION
This symbol indicates the possibility of property damage or serious consequences.

⚠ WARNING

- This appliance can be used by children aged from 8 years and above and persons with reduced physical, sensory or mental capabilities or lack of experience and knowledge if they have been given supervision or instruction concerning use of the appliance in a safe way and understand the hazards involved. Children shall not play with the appliance. Cleaning and user maintenance shall not be made by children without supervision (EN Standard requirements).
- This appliance is not intended for use by persons(including children) with reduced physical, sensory or mental capabilities, or lack of experience and knowledge, unless they have been given supervision or instruction concerning use of the appliance by a person responsible for their safety. Children should be supervised to ensure that they do not play with the appliance.

⚠ WARNINGS FOR PRODUCT USE

- If an abnormal situation arises (like a burning smell), immediately turn off the unit and disconnect the power. Call your dealer for instructions to avoid electric shock, fire or injury.
- **Do not** insert fingers, rods or other objects into the air inlet or outlet. This may cause injury, since the fan may be rotating at high speeds.
- **Do not** use flammable sprays such as hair spray, lacquer or paint near the unit. This may cause fire or combustion.
- **Do not** operate the air conditioner in places near or around combustible gases. Emitted gas may collect around the unit and cause explosion.
- **Do not** operate your air conditioner in a wet room such as a bathroom or laundry room. Too much exposure to water can cause electrical components to short circuit.
- **Do not** expose your body directly to cool air for a prolonged period of time.
- **Do not** allow children to play with the air conditioner. Children must be supervised around the unit at all times.
- If the air conditioner is used together with burners or other heating devices, thoroughly ventilate the room to avoid oxygen deficiency.
- In certain functional environments, such as kitchens, server rooms, etc., the use of specially designed air-conditioning units is highly recommended.

CLEANING AND MAINTENANCE WARNINGS

- Turn off the device and disconnect the power before cleaning. Failure to do so can cause electrical shock.
- **Do not** clean the air conditioner with excessive amounts of water.
- **Do not** clean the air conditioner with combustible cleaning agents. Combustible cleaning agents can cause fire or deformation.

⚠ CAUTION

- Turn off the air conditioner and disconnect the power if you are not going to use it for a long time.
- Turn off and unplug the unit during storms.
- Make sure that water condensation can drain unhindered from the unit.
- **Do not** operate the air conditioner with wet hands. This may cause electric shock.
- **Do not** use device for any other purpose than its intended use.
- **Do not** climb onto or place objects on top of the outdoor unit.
- **Do not** allow the air conditioner to operate for long periods of time with doors or windows open, or if the humidity is very high.

⚠ ELECTRICAL WARNINGS

- Only use the specified power cord. If the power cord is damaged, it must be replaced by the manufacturer, its service agent or similarly qualified persons in order to avoid a hazard.
- Keep power plug clean. Remove any dust or grime that accumulates on or around the plug. Dirty plugs can cause fire or electric shock.
- **Do not** pull power cord to unplug unit. Hold the plug firmly and pull it from the outlet. Pulling directly on the cord can damage it, which can lead to fire or electric shock.
- **Do not** modify the length of the power supply cord or use an extension cord to power the unit.
- **Do not** share the electrical outlet with other appliances. Improper or insufficient power supply can cause fire or electrical shock.
- The product must be properly grounded at the time of installation, or electrical shock may occur.
- For all electrical work, follow all local and national wiring standards, regulations, and the Installation Manual. Connect cables tightly, and clamp them securely to prevent external forces from damaging the terminal. Improper electrical connections can overheat and cause fire, and may also cause shock. All electrical connections must be made according to the Electrical Connection Diagram located on the panels of the indoor and outdoor units.
- All wiring must be properly arranged to ensure that the control board cover can close properly. If the control board cover is not closed properly, it can lead to corrosion and cause the connection points on the terminal to heat up, catch fire, or cause electrical shock.
- If connecting power to fixed wiring, an all-pole disconnection device which has at least 3mm clearances in all poles, and have a leakage current that may exceed 10mA, the residual current device(RCD) having a rated residual operating current not exceeding 30mA, and disconnection must be incorporated in the fixed wiring in accordance with the wiring rules.

TAKE NOTE OF FUSE SPECIFICATIONS

The air conditioner's circuit board (PCB) is designed with a fuse to provide overcurrent protection.
The specifications of the fuse are printed on the circuit board ,such as :
T5A/250VAC, T10A/250VAC, etc.
T20A/250VAC(<=24000Btu/h units), T30A/250VAC(>24000Btu/h units)
NOTE: For the units with R32 or R290 refrigerant , only the blast-proof ceramic fuse can be used.

⚠WARNINGS FOR PRODUCT INSTALLATION

1. Installation must be performed by an authorized dealer or specialist. Defective installation can cause water leakage, electrical shock, or fire.
2. Installation must be performed according to the installation instructions. Improper installation can cause water leakage, electrical shock, or fire.
   (In North America,installation must be performed in accordance with the requirement of NEC and CEC by authorized personnel only.)
3. Contact an authorized service technician for repair or maintenance of this unit. This appliance shall be installed in accordance with national wiring regulations.
4. Only use the included accessories, parts, and specified parts for installation. Using non-standard parts can cause water leakage, electrical shock, fire, and can cause the unit to fail.
5. Install the unit in a firm location that can support the unit's weight. If the chosen location cannot support the unit's weight, or the installation is not done properly, the unit may drop and cause serious injury and damage.
6. Install drainage piping according to the instructions in this manual. Improper drainage may cause water damage to your home and property.
7. For units that have an auxiliary electric heater, **do not** install the unit within 1 meter (3 feet) of any combustible materials.
8. **Do not** install the unit in a location that may be exposed to combustible gas leaks. If combustible gas accumulates around the unit, it may cause fire.
9. Do not turn on the power until all work has been completed.
10. When moving or relocating the air conditioner, consult experienced service technicians for disconnection and reinstallation of the unit.
11. How to install the appliance to its support, please read the information for details in "indoor unit installation" and "outdoor unit installation" sections .

Note about Fluorinated Gasses(Not applicable to the unit using R290 Refrigerant)

1. This air-conditioning unit contains fluorinated greenhouse gasses. For specific information on the type of gas and the amount, please refer to the relevant label on the unit itself or the "Owner's Manual - Product Fiche " in the packaging of the outdoor unit. (European Union products only).
2. Installation, service, maintenance and repair of this unit must be performed by a certified technician.
3. Product uninstallation and recycling must be performed by a certified technician.
4. For equipment that contains fluorinated greenhouse gases in quantities of 5 tonnes of CO_2 equivalent or more, but of less than 50 tonnes of CO_2 equivalent, If the system has a leak-detection system installed, it must be checked for leaks at least every 24 months.
5. When the unit is checked for leaks, proper record-keeping of all checks is strongly recommended.

⚠ WARNING for Using R32/R290 Refrigerant

- When flammable refrigerant are employed, appliance shall be stored in a well -ventilated area where the room size corresponds to the room area as specifiec for operation.
  For R32 frigerant models:
  Appliance shall be installed, operated and stored in a room with a floor area larger than X m^2 .
  Appliance shall not be installed in an unvertilated space, if that space is smaller than X m^2
  (Please see the following form).

Model (Btu/h)	Amount of refrigerant to be charged (kg)	Minimum room area (m^2)
≤12000	≤1.11	1
18000	≤1.65	2
24000	≤2.58	5
30000	≤3.08	7
36000	≤3.84	10
42000-48000	≤4.24	12
55000-60000	≤4.39	13

- Reusable mechanical connectors and flared joints are not allowed indoors. (**EN** Standard Requirements).
- Mechanical connectors used indoors shall have a rate of not more than 3g/year at 25% of the maximum allowable pressure. When mechanical connectors are reused indoors, sealing parts shall be renewed. When flared joints are reused indoors, the flare part shall be re-fabricated. (**UL** Standard Requirements)
- When mechanical connectors are reused indoors, sealing parts shall be renewed. When flared joints are reused indoors, the flare part shall be re-fabricated. (**IEC** Standard Requirements)
- Mechanical connectors used indoors shall comply with ISO 14903.

European Disposal Guidelines

This marking shown on the product or its literature, indicates that waste electrical and eletrical equipment should not be mixed with general household waste.

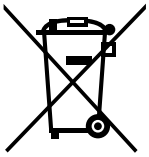

Correct Disposal of This Product

(Waste Electrical & Electronic Equipment)

This appliance contains refrigerant and other potentially hazardous materials. When disposing of this appliance, the law requires special collection and treatment. **Do not** dispose of this product as household waste or unsorted municipal waste.

When disposing of this appliance, you have the following options:

- Dispose of the appliance at designated municipal electronic waste collection facility.
- When buying a new appliance, the retailer will take back the old appliance free of charge.
- The manufacturer will take back the old appliance free of charge.
- Sell the appliance to certified scrap metal dealers.

Special notice

Disposing of this appliance in the forest or other natural surroundings endangers your health and is bad for the environment. Hazardous substances may leak into the ground water and enter the food chain.

Unit Specifications and Features

Indoor unit

NOTE: Different models have different display panel. Not all the indicators describing below are available for the air conditioner you purchased. Please check the indoor display panel of the unit you purchased. Illustrations in this manual are for explanatory purposes. The actual shape of your indoor unit may be slightly different. The actual shape shall prevail.

(A) For the unit which the filter is removed for left or right side

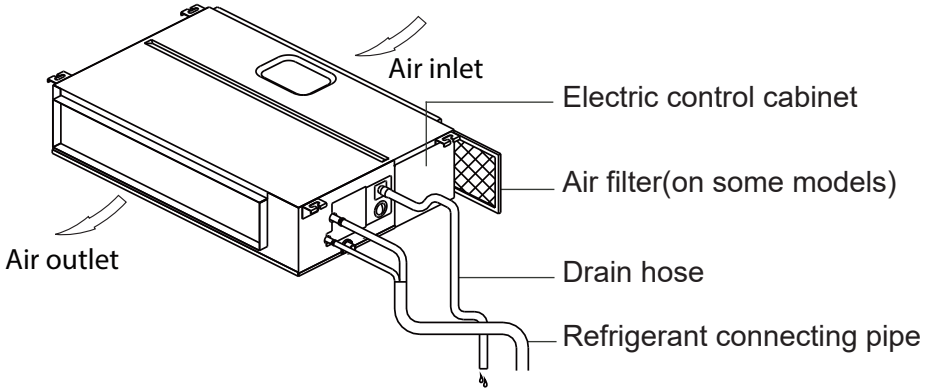

(B) For the unit which the filter is removed from the bottom side

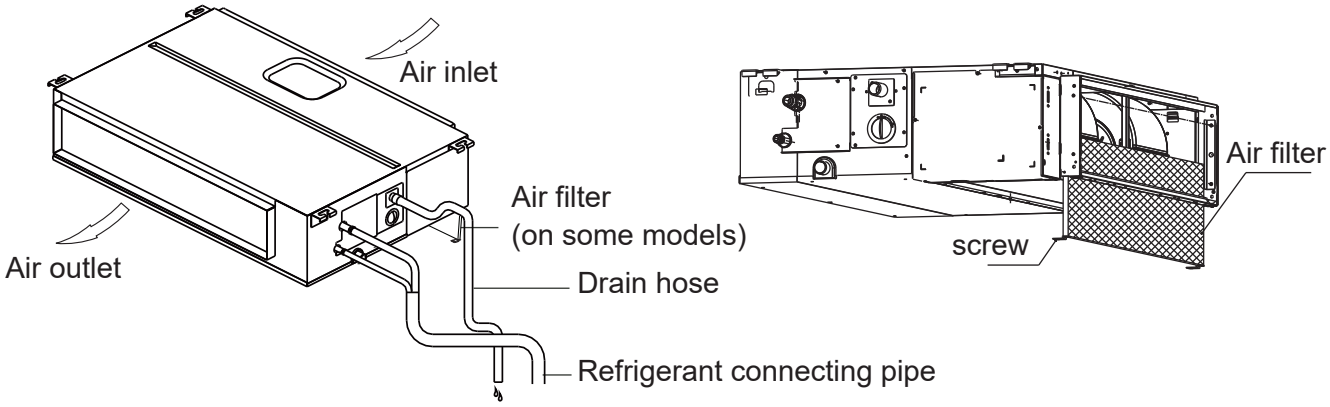

1.Put the filter into the flange subassembly through the bottom side;
2.Lock the screw.

(C) For the unit which the filter is removed from the back

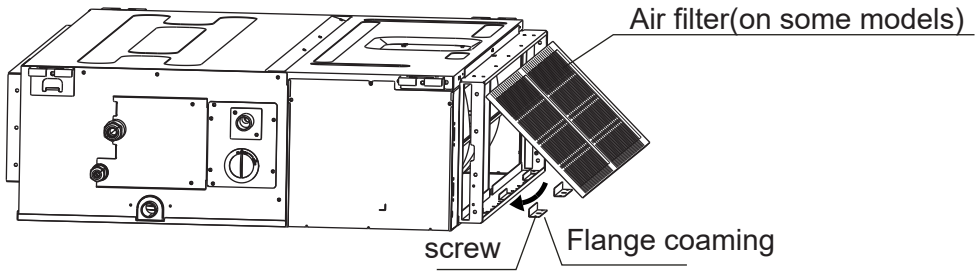

1. Remove two flange coaming;
2. Put the filter into the flange subassembly;
3. Rotate the air filter;
4. Put back to the flange coaming.

Display panel

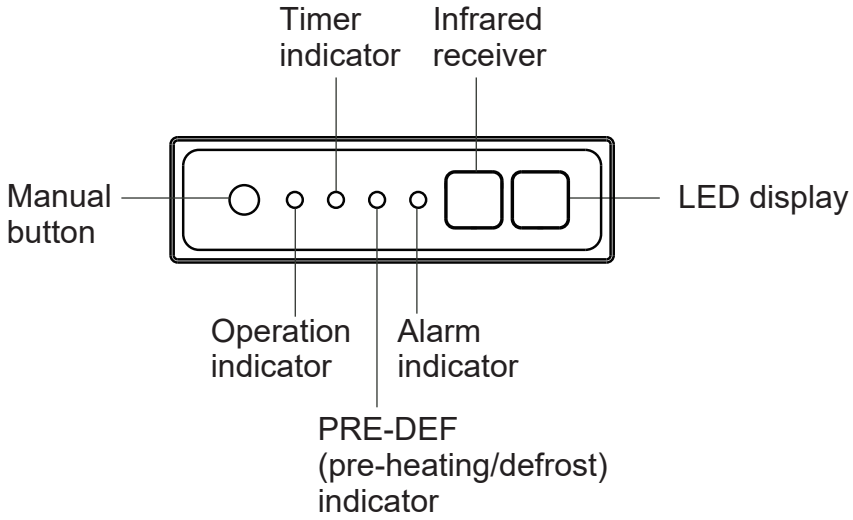

- **MANUAL button :** This button selects the mode in the following order: AUTO, FORCED COOL, OFF.

  FORCED COOL mode : In FORCED COOL mode, the Operation light flashes. The system will then turn to AUTO after it has cooled with a high wind speed for 30 minutes. The remote control will be disabled during this operation.

  OFF mode : When the display panel is turned OFF, the unit turns off and the remote control is re-enabled.

Operating temperature

When your air conditioner is used outside of the following temperature ranges, certain safety protection features may activate and cause the unit to disable.

Inverter Split Type

	COOL mode	HEAT mode	DRY mode
Room Temperature	17°C - 32°C (62°F - 90°F)	0°C - 30°C (32°F - 86°F)	10°C - 32°C (50°F - 90°F)
Outdoor Temperature	0°C - 50°C (32°F - 122°F)	-15°C - 24°C (5°F - 75°F)	0°C - 50°C (32°F - 122°F)
	-15°C - 50°C (5°F - 122°F) (For models with low temp. cooling systems.)		
	0°C - 52°C (32°F - 126°F) (For special tropical models)		0°C - 52°C (32°F - 126°F) (For special tropical models)

FOR OUTDOOR UNITS WITH AUXILIARY ELECTRIC HEATER

When outside temperature is below 0°C (32°F), we strongly recommend keeping the unit plugged in at all time to ensure smooth ongoing performance.

Fixed-speed Type

	COOL mode	HEAT mode	DRY mode
Room Temperature	17°C-32°C (62°F-90°F)	0°C-30°C (32°F-86°F)	10°C-32°C (50°F-90°F)
Outdoor Temperature	18°C-43°C (64°F-109°F)	-7°C-24°C (19°F-75°F)	11°C-43°C (52°F-109°F)
	-7°C-43°C (19°F-109°F) (For models with low-temp cooling systems)		18°C-43°C (64°F-109°F)
	18°C-52°C (64°F-126°F) (For special tropical models)		18°C-52°C (64°F-126°F) (For special tropical models)

NOTE: Room relative humidity less than 80%. If the air conditioner operates in excess of this figure, the surface of the air conditioner may attract condensation. Please sets the vertical air flow louver to its maximum angle (vertically to the floor), and set HIGH fan mode.

To further optimize the performance of your unit, do the following:

- Keep doors and windows closed.
- Limit energy usage by using TIMER ON and TIMER OFF functions.
- Do not block air inlets or outlets.
- Regularly inspect and clean air filters.

Other features

Default Setting

When the air conditioner restarts after a power failure, it will default to the factory settings (AUTO mode, AUTO fan, 24°C (76°F)). This may cause inconsistencies on the remote control and unit panel. Use your remote control to update the status.

Auto-Restart (some models)

In case of power failure, the system will immediately stop. When power returns, the Operation light on the indoor unit will flash. To restart the unit, press the **ON/OFF** button on the remote control. If the system has an auto restart function, the unit will restart using the same settings.

Three-minute protection feature (some models)

A protection feature prevents the air conditioner from being activated for approximately 3 minutes when it restarts immediately after operation.

Louver Angle Memory Function (some models)

Some models are designed with a louver angle memory function. When the unit restarts after a power failure, the angle of the horizontal louvers will automatically return to the previous position. The angle of the horizontal louver should not be set too small as condensation may form and drip into the machine. To reset the louver, press the manual button, which will reset the horizontal louver settings.

Refrigerant Leak Detection System (some models)

The indoor unit will automatically display "EC" or "EL0C"or flash LEDS (model dependent) when it detects refrigerant leakage.

Care and Maintenance

Cleaning Your Indoor Unit

⚠ BEFORE CLEANING OR MAINTENANCE

ALWAYS TURN OFF YOUR AIR CONDITIONER SYSTEM AND DISCONNECT ITS POWER SUPPLY BEFORE CLEANING OR MAINTENANCE.

⚠ CAUTION

Only use a soft, dry cloth to wipe the unit clean. If the unit is especially dirty, you can use a cloth soaked in warm water to wipe it clean.

- **Do not** use chemicals or chemically treated cloths to clean the unit
- **Do not** use benzene, paint thinner, polishing powder or other solvents to clean the unit. They can cause the plastic surface to crack or deform.
- **Do not** use water hotter than 40°C (104°F) to clean the front panel. This can cause the panel to deform or become discolored.

⚠ CAUTION

- Before changing the filter or cleaning, turn off the unit and disconnect its power supply. Removal and maintenance must be performed by a certified technician.
- When removing filter, do not touch metal parts in the unit. The sharp metal edges can cut you.
- Do not use water to clean the inside of the indoor unit. This can destroy insulation and cause electrical shock.
- Do not expose filter to direct sunlight when drying. This can shrink the filter.

⚠ CAUTION

- Any maintenance and cleaning of outdoor unit should be performed by an authorized dealer or a licensed service provider.
- Any unit repairs should be performed by an authorized dealer or a licensed service provider.

Maintenance – Long Periods of Non-Use

If you plan not to use your air conditioner for an extended period of time, do the following:

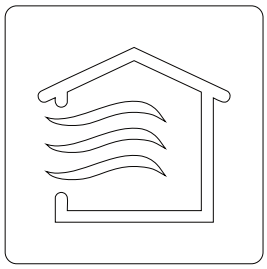

Turn on FAN function until unit dries out completely

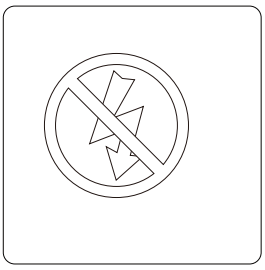

Turn off the unit and disconnect the power

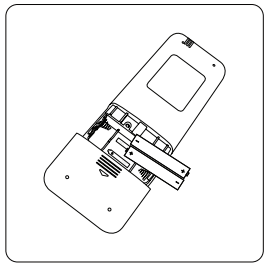

Remove batteries from remote control

Maintenance – Pre-Season Inspection

After long periods of non-use, or before periods of frequent use, do the following:

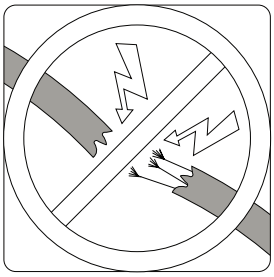

Check for damaged wires



Check for leaks

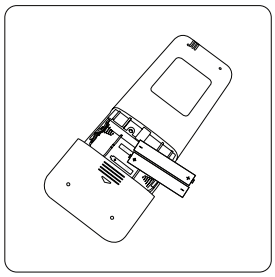

Replace batteries

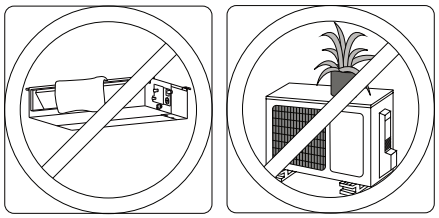

Make sure nothing is blocking all air inlets and outlets

Troubleshooting

⚠ SAFETY PRECAUTIONS

If any of the following conditions occurs, turn off your unit immediately!

- The power cord is damaged or abnormally warm
- You smell a burning odor
- The unit emits loud or abnormal sounds
- A power fuse blows or the circuit breaker frequently trips
- Water or other objects fall into or out of the unit

DO NOT ATTEMPT TO FIX THESE YOURSELF! CONTACT AN AUTHORIZED SERVICE PROVIDER IMMEDIATELY!

Common Issues

The following problems are not a malfunction and in most situations will not require repairs.

Issue	Possible Causes
Unit does not turn on when pressing ON/OFF button	The Unit has a 3-minute protection feature that prevents the unit from overloading. The unit cannot be restarted within three minutes of being turned off.
	Cooling and Heating Models: If the Operation light and PRE-DEF (Pre-heating/ Defrost) indicators are lit up, the outdoor temperature is too cold and the unit's anti-cold wind is activated in order to defrost the unit.
	In Cooling-only Models: If the "Fan Only" indicator is lit up, the outdoor temperature is too cold and the unit's anti-freeze protection is activated in order to defrost the unit.
The unit changes from COOL/HEAT mode to FAN mode	The unit may change its setting to prevent frost from forming on the unit. Once the temperature increases, the unit will start operating in the previously selected mode again.
	The set temperature has been reached, at which point the unit turns off the compressor. The unit will continue operating when the temperature fluctuates again.
The indoor unit emits white mist	In humid regions, a large temperature difference between the room's air and the conditioned air can cause white mist.
Both the indoor and outdoor units emit white mist	When the unit restarts in HEAT mode after defrosting, white mist may be emitted due to moisture generated from the defrosting process.
The indoor unit makes noises	A rushing air sound may occur when the louver resets its position.
	A squeaking sound is heard when the system is OFF or in COOL mode. The noise is also heard when the drain pump (optional) is in operation.
	A squeaking sound may occur after running the unit in HEAT mode due to expansion and contraction of the unit's plastic parts.
Both the indoor unit and outdoor unit make noises	Low hissing sound during operation: This is normal and is caused by refrigerant gas flowing through both indoor and outdoor units.
	Low hissing sound when the system starts, has just stopped running, or is defrosting: This noise is normal and is caused by the refrigerant gas stopping or changing direction.
	Squeaking sound: Normal expansion and contraction of plastic and metal parts caused by temperature changes during operation can cause squeaking noises.

Issue	Possible Causes
The outdoor unit makes noises	The unit will make different sounds based on its current operating mode.
Dust is emitted from either the indoor or outdoor unit	The unit may accumulate dust during extended periods of non-use, which will be emitted when the unit is turned on. This can be mitigated by covering the unit during long periods of inactivity.
The unit emits a bad odor	The unit may absorb odors from the environment (such as furniture, cooking, cigarettes, etc.) which will be emitted during operations.
	The unit's filters have become moldy and should be cleaned.
The fan of the outdoor unit does not operate	During operation, the fan speed is controlled to optimize product operation.

NOTE: If problem persists, contact a local dealer or your nearest customer service center. Provide them with a detailed description of the unit malfunction as well as your model number.

Troubleshooting

When troubles occur, please check the following points before contacting a repair company.

Problem	Possible Causes	Solution
Poor Cooling Performance	Temperature setting may be higher than ambient room temperature	Lower the temperature setting
	The heat exchanger on the indoor or outdoor unit is dirty	Clean the affected heat exchanger
	The air inlet or outlet of either unit is blocked	Turn the unit off, remove the obstruction and turn it back on
	Doors and windows are open	Make sure that all doors and windows are closed while operating the unit
	Excessive heat is generated by sunlight	Close windows and curtains during periods of high heat or bright sunshine
	Too many sources of heat in the room (people, computers, electronics, etc.)	Reduce amount of heat sources
	Low refrigerant due to leak or long-term use	Check for leaks, re-seal if necessary and top off refrigerant

Problem	Possible Causes	Solution
The unit is not working	Power failure	Wait for the power to be restored
	The power is turned off	Turn on the power
	The fuse is burned out	Replace the fuse
	Remote control batteries are dead	Replace batteries
	The Unit's 3-minute protection has been activated	Wait three minutes after restarting the unit
	Timer is activated	Turn timer off
The unit starts and stops frequently	There's too much or too little refrigerant in the system	Check for leaks and recharge the system with refrigerant.
	Incompressible gas or moisture has entered the system.	Evacuate and recharge the system with refrigerant
	System circuit is blocked	Determine which circuit is blocked and replace the malfunctioning piece of equipment
	The compressor is broken	Replace the compressor
	The voltage is too high or too low	Install a manostat to regulate the voltage
Poor heating performance	The outdoor temperature is extremely low	Use auxiliary heating device
	Cold air is entering through doors and windows	Make sure that all doors and windows are closed during use
	Low refrigerant due to leak or long-term use	Check for leaks, re-seal if necessary and top off refrigerant
Indicator lamps continue flashing **Error code appears and begins with the letters as the following in the window display of indoor unit:** • **E(x), P(x), F(x)** • **EH(xx), EL(xx), EC(xx)** • **PH(xx), PL(xx), PC(xx)**	The unit may stop operation or continue to run safely. If the indicator lamps continue to flash or error codes appear, wait for about 10 minutes. The problem may resolve itself. If not, disconnect the power, then connect it again. Turn the unit on. If the problem persists, disconnect the power and contact your nearest customer service center.	

NOTE: If your problem persists after performing the checks and diagnostics above, turn off your unit immediately and contact an authorized service center.

Accessories

The air conditioning system comes with the following accessories. Use all of the installation parts and accessories to install the air conditioner. Improper installation may result in water leakage, electrical shock and fire, or cause the equipment to fail. The items are not included with the air conditioner must be purchased separately.

Name of Accessories	Q'ty(pc)	Shape	Name of Accessories	Q'ty(pc)	Shape
Manual	2~4		**Drain joint (some models)**	1	
Soundproof/insulation sheath	2	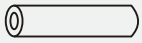	**Seal ring (some models)**	1	
Copper nut	2		**Connecting wire for display (2m) (some models)**	1	
Orifice (some models)	1	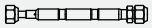	**Magnetic ring (wrap the electric wires S1 & S2 (P & Q & E) around the magnetic ring twice) (some models)**	1	 S1&S2(P&Q&E)
Transfer connector (Φ12.7-Φ15.9) (some models)	1	**Transfer connector** **NOTE: When the connecting pipes of indoor and outdoor units do not match, this part needs to be added.(See the Fig.a or Fig.b)** 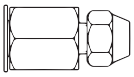 (Fig.a) 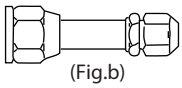 (Fig.b)	**Magnetic ring (Hitch it on the connective cable between indoor unit and outdoor unit after installation.) (some models)**	Varies by model	
Transfer connector (Φ9.52-Φ12.7) (some models)	1		**Cord protection rubber ring (some models)**	1	
Transfer connector (Φ6.35-Φ9.52) (some models)	1		**Display panel *Just for testing purposes only (some models- KJR-120G,KJR-120H)**	1	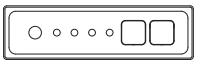

Optional accessories

- There are two types of remote controls: wired and wireless.
  Select a remote controller based on customer preferences and requirements and install in an appropriate place.
  Refer to catalogues and technical literature for guidance on selecting a suitable remote controller.

Name	Shape		Quantity(PC)
Connecting pipe assembly	**Liquid side**	**Φ6.35(1/4in)**	Parts you must purchase separately. Consult the dealer about the proper pipe size of the unit you purchased.
		Φ9.52(3/8in)	
		Φ12.7(1/2in)	
	Gas side	**Φ9.52(3/8in)**	
		Φ12.7(1/2in)	
		Φ16(5/8in)	
		Φ19(3/4in)	
		Φ22(7/8in)	

Installation Summary

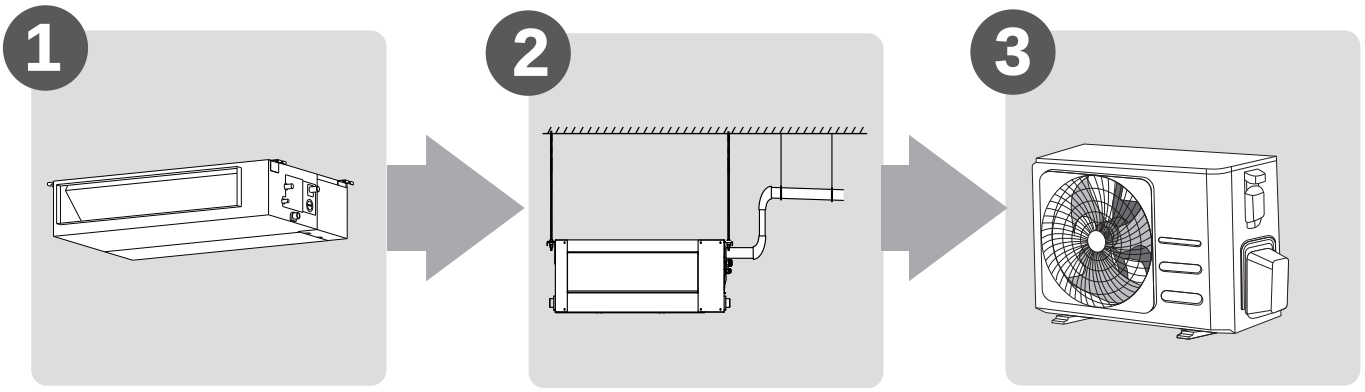

Install the indoor unit

Install the drainpipe

Install the outdoor unit

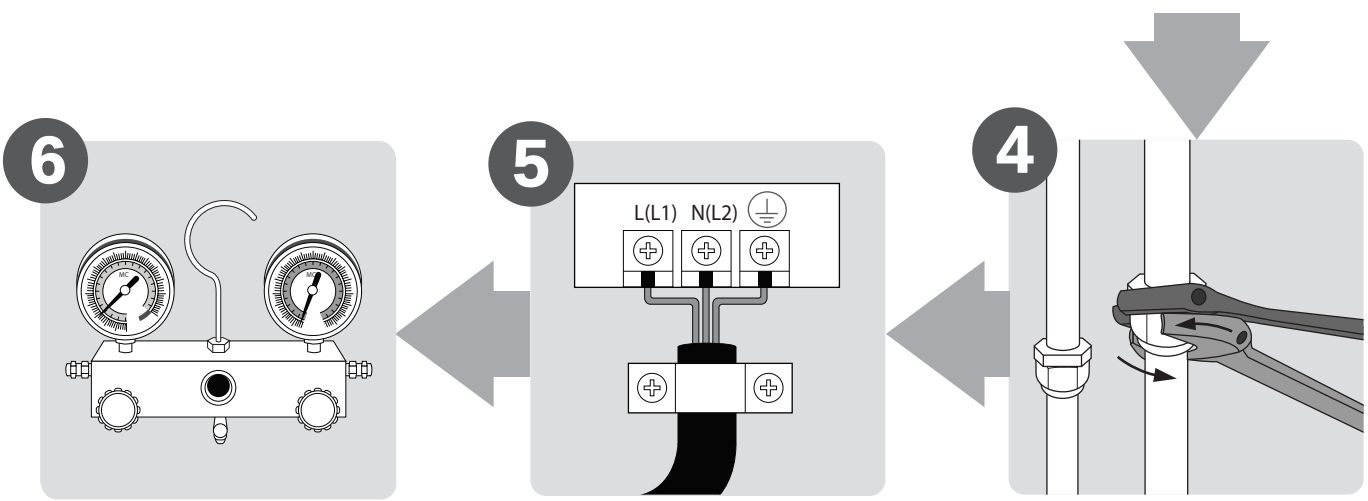

Connect the refrigerant pipes

Connect the wires

Evacuate the refrigeration system

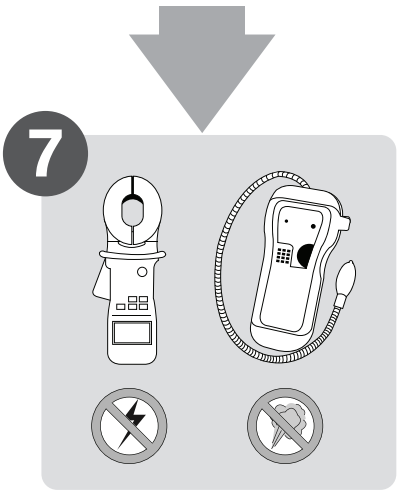

Perform a test run

Unit Parts

NOTE: The installation must be performed in accordance with the requirement of local and national standards. The installation may be slightly different in different areas.

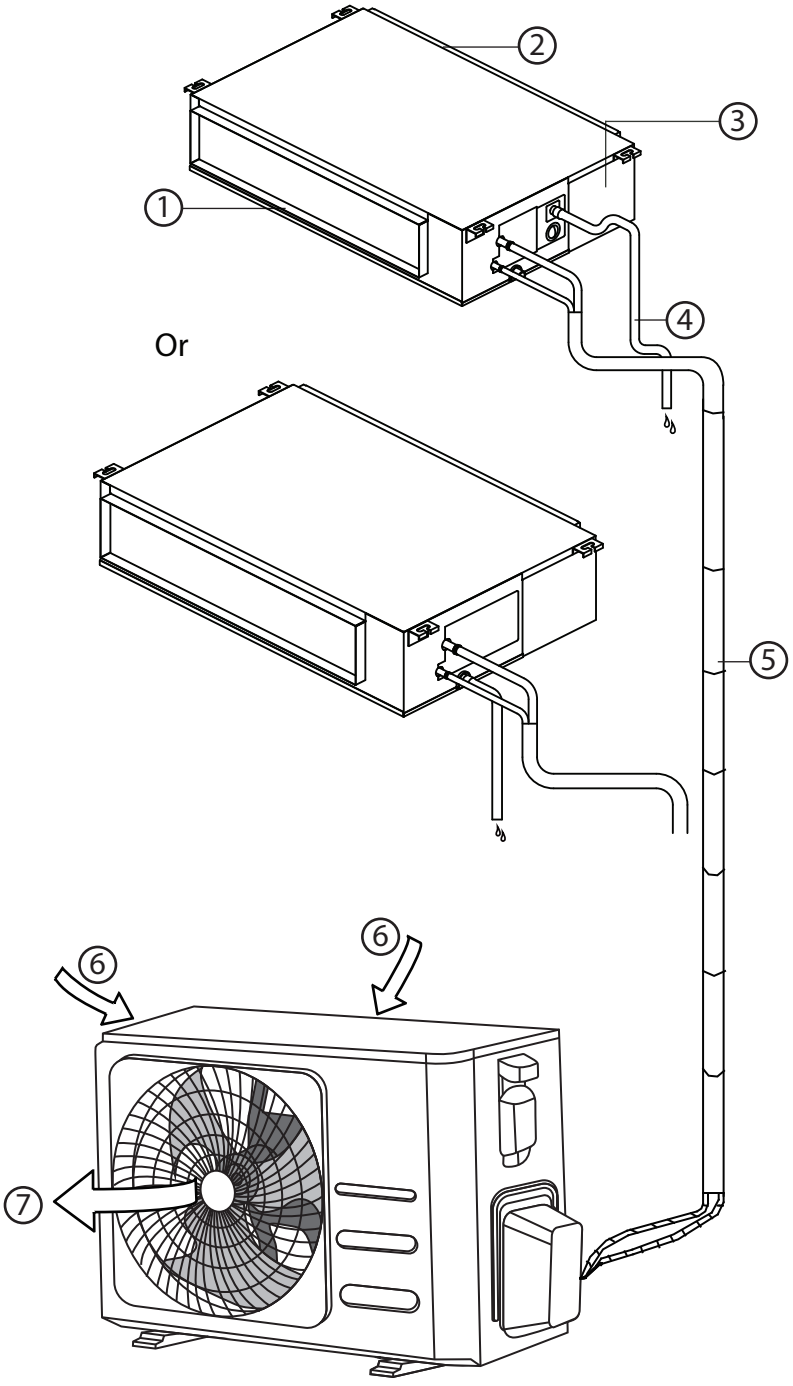

① Air outlet
② Air inlet
③ Electric control cabinet
④ Drain pipe

⑤ Connecting pipe
⑥ Air inlet
⑦ Air outlet

NOTE ON ILLUSTRATIONS

Illustrations in this manual are for explanatory purposes. The actual shape of your indoor unit may be slightly different. The actual shape shall prevail.

Indoor Unit Installation

Installation Instructions – Indoor unit

NOTE: Panel installation should be performedafter piping and wiring have been completed.

Step 1: Select installation location

Before installing the indoor unit, you must choose an appropriate location. The following are standards that will help you choose an appropriate location for the unit.

Proper installation locations meet the following standards:

- ☑ Enough room exists for installation and maintenance.
- ☑ Enough room exists for the connecting the pipe and drainpipe.
- ☑ The ceiling is horizontal and its structure can sustain the weight of the indoor unit.
- ☑ The air inlet and outlet are not blocked.
- ☑ The airflow can fill the entire room.
- ☑ There is no direct radiation from heaters.
- ☑ Models with a cooling capacity of 9000Btu to 18000Btu only apply to one room.

DO NOT install unit in the following locations:

- ⊘ Areas with oil drilling or fracking
- ⊘ Coastal areas with high salt content in the air
- ⊘ Areas with caustic gases in the air, such as hot springs
- ⊘ Areas that experience power fluctuations, such as factories
- ⊘ Enclosed spaces, such as cabinets
- ⊘ Kitchens that use natural gas
- ⊘ Areas with strong electromagnetic waves
- ⊘ Areas that store flammable materials or gas
- ⊘ Rooms with high humidity, such as bathrooms or laundry rooms

Installation place

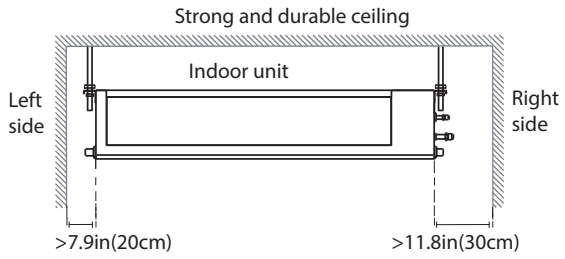

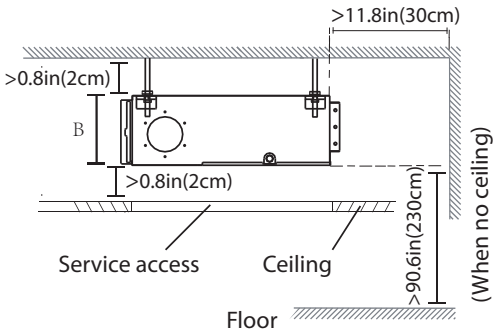

Maintenance space

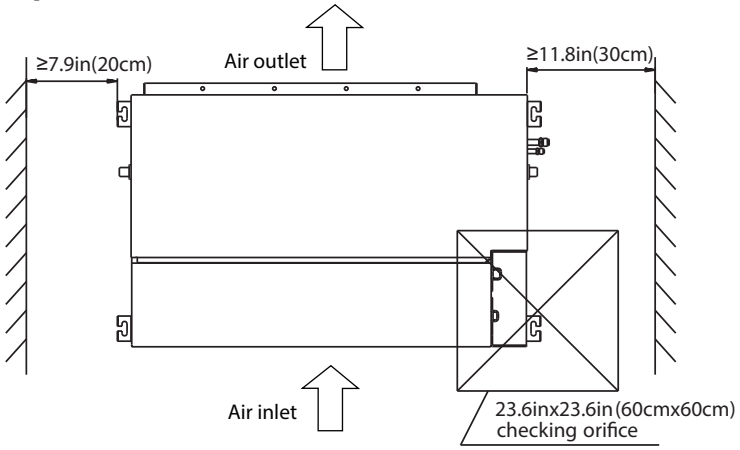

Step 2: Hang indoor unit.

1. Please refer to the following diagrams to locate the four positioning screw bolt holes on the ceiling. Be sure to mark the paces where you will drill ceiling hook holes.

Air outlet dimensions

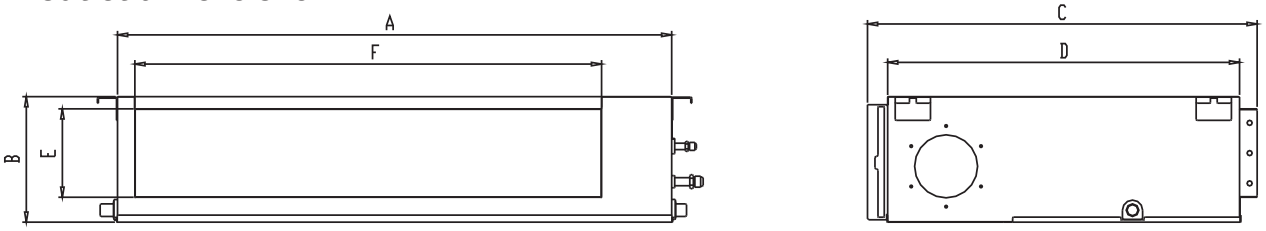

Air inlet dimensions

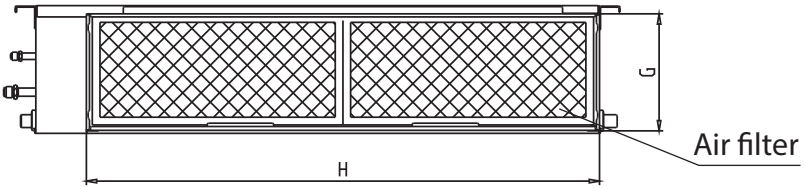

Descending ventilation opening and mounted hook

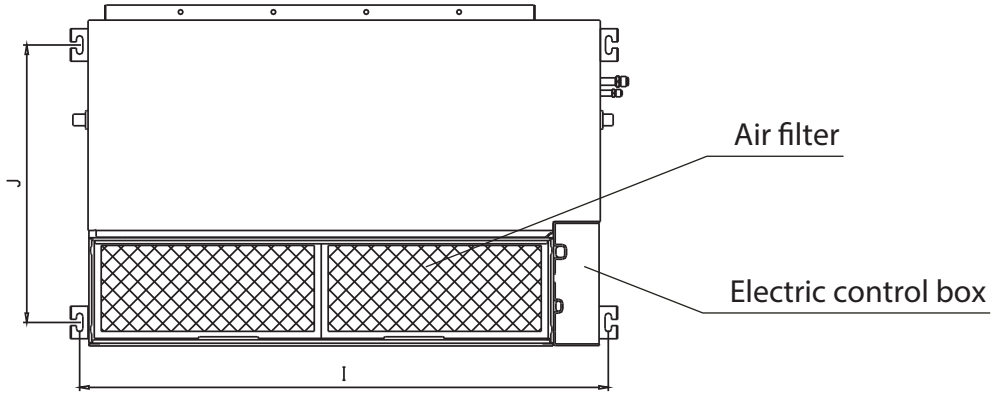

(unit: mm/inch)

MODEL (Btu/h)	Outline dimension				air outlet opening size		air return opening size		Size of mounted lug	
	A	B	C	D	E	F	G	H	I	J
9K/12K	700/27.6	200/7.9	506/19.9	450/17.7	152/6	537/21.1	186/7.3	599/23.6	741/29.2	360/14.2
18K	880/34.6	210/8.3	674/26.5	600/23.6	136/5.4	706/27.8	190/7.5	782/30.8	920/36.2	508/20
24K~36K	1100/43.3	249/9.8	774/30.5	700/27.6	175/6.9	926/36.5	228/8.9	1001/39.4	1140/44.9	598/23.5
30K~36K	1360/53.5	249/9.8	774/30.5	700/27.6	175/6.9	1186/46.7	228/8.9	1261/49.6	1400/55.1	598/23.5
36K~60K	1200/47.2	300/11.8	874/34.4	800/31.5	227/8.9	1044/41.1	280/11	1101/43.3	1240/48.8	697/27.4

Wood

Place the wood mounting across the roof beam, then install the hanging screw bolts.

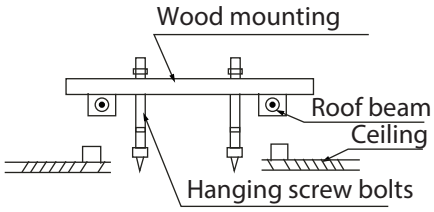

New concrete bricks

Inlay or embed the screw bolts.


(Blade shape insertion)


(Slide insertion)

Original concrete bricks

Use an embedding screw bolt, crock, and stick harness.

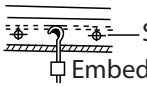

(Pipe hanging and embedding screw bolt)

Steel roof beam structure

Install and use the supporting steel angle.

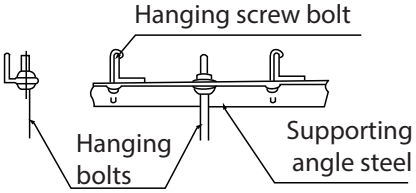

⚠ CAUTION

The unit body must be completely aligned with the hole. Ensure that the unit and the hole arethe same size before moving on.

2. Install and fit pipes and wires after you have finished installing the main body.When choosing where to start, determine the direction of the pipes to be drawn out. Especially in cases where there is a ceiling involved, align the refrigerant pipes, drain pipes, and indoor and outdoor lines with their connection points before mounting the unit.
3. Install hanging screw bolts.
   - Cut off the roof beam.
   - Strengthen the point at which the cut was made. Consolidate the roof beam.
4. After you select an installation location,align the refrigerant pipes, drain pipes, as well as indoor and outdoor wires with their connection points before mounting the unit.
5. Drill 4 holes 10cm (4") deep at the ceiling hook positions in the internal ceiling. Be sure to hold the drill at a 90° angle to the ceiling.
6. Secure the bolt using the washers and nuts provided.
7. Install the four suspension bolts.
8. Mount the indoor unit with at least two people to lift and secure it. Insert suspension bolts into the unit's hanging holes. Fasten them using the washers and nuts provided.

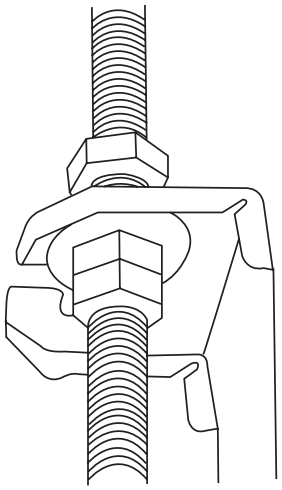

9. Mount the indoor unit onto the hanging screw bolts with a block. Position the indoor unit flat using a level indicator to prevent leaks.

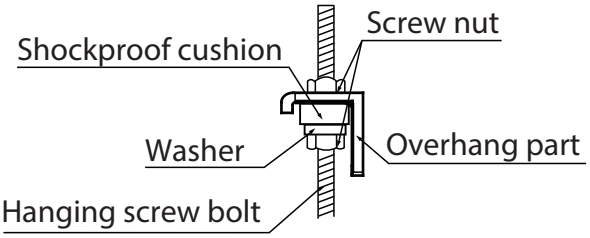

NOTE: Confirm the minimum drain tilt is 1/100 or more.

Step 3: Duct and accessories installation

1. Install the filter (optional) according to the size of the air inlet.
2. Install the canvas tie-in between the body and duct.
3. The air inlet and air outlet duct should be far enough apart enough to a avoid air passage short-circuit.
4. Connect the duct according to the following diagram:

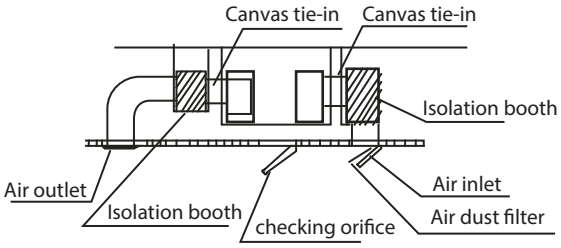

NOTE:
The min. length of the duct should be more than 1m, and fix on the air inlet by screws(applicable to the unit that the air inlet filter is not fasten by screws).

5. Refer to the following static pressure guidelines when installing the indoor unit.

MODEL (Btu/h)	Static Pressure (Pa/in.wg)
9K	0~50/0~0.2
12K	0~50/0~0.2
18K	0~100/0~0.4
24K	0~160/0~0.64
30K~36K	0~160/0~0.64
42K~60K	0~160/0~0.64

Change the fan motor static pressure according to external duct static pressure.

NOTE:
1. Do not place the connecting duct weight on the indoor unit.
2. When connecting the duct, use an nonflammable canvas tie-in to prevent vibrating.
3. Insulation foam must be wrapped outside the duct to avoid condensate. An internal duct underlayer can be added to reduce noise, if the end-user requires.

Step 4: Adjust the air inlet direction (From rear side to under-side)

1. Take off the ventilation panel and flange.

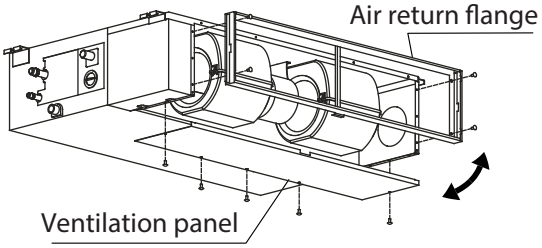

Bend the rear ventilation panel 90 degrees along the dotted line into a descending ventilation panel.(some models)

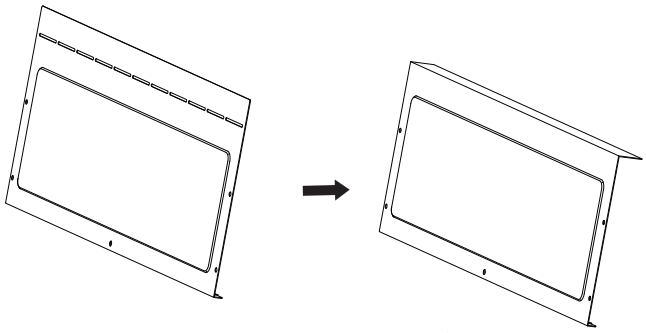

2. Change the mounting positions of the ventilation panel and air return flange.
3. When installing the filter mesh, fit it into the flange as illustrated in the following figure.

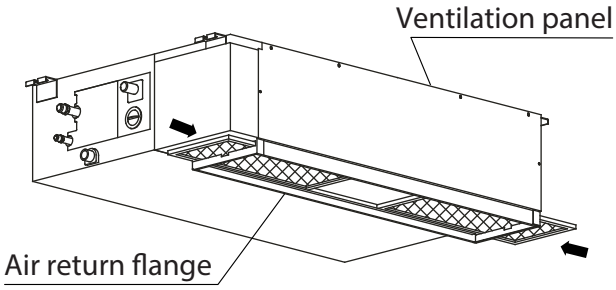

Or

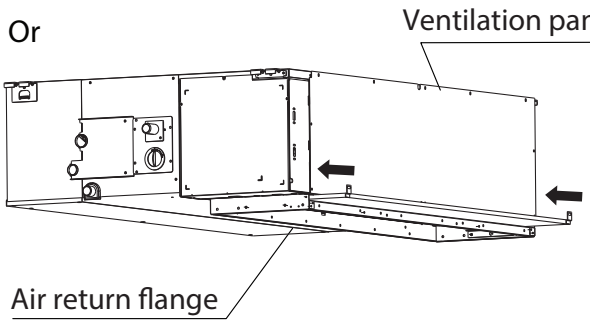

NOTE: All the figures in this manual are for demonstration purposes only. The air conditioner you have purchased may be slightly different in design, though similar in shape.

Step 5: Fresh air duct installation

Dimension :

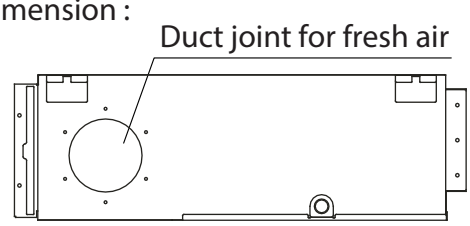

MODLE 9-12

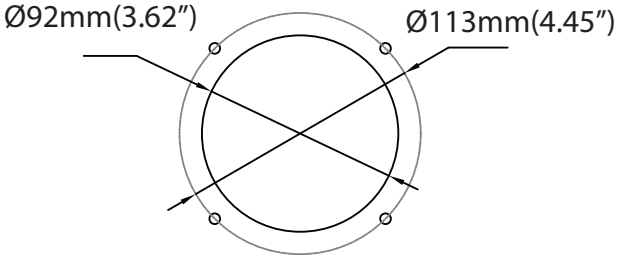

MODLE 18-60

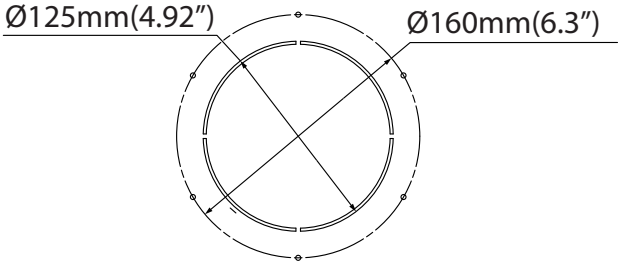

Step 6: Motor and drain pump maintenance

(the rear ventilated panel is used as an example)

Motor maintenance:

1. Take off the ventilated panel.
2. Take off the blower housing.
3. Take off the motor.

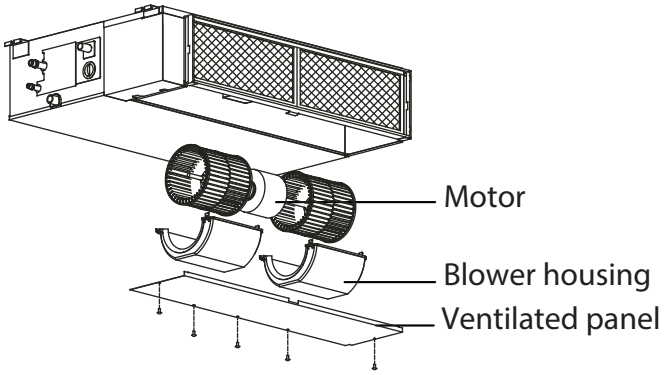

Pump maintainance:

1. Remove four screws from the drain pump.
2. Unplug the pump power supply and water level switch cable.
3. Detach the pump.

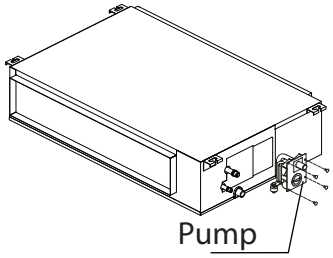

Step 7: Drill wall hole for connective piping

1. Determine the location of the wall hole based on the location of the outdoor unit.
2. Using a 65mm (2.5in) or 90mm(3.54in) (depending on models)core drill, drill a hole in the wall. Make sure that the hole is drilled at a slight downward angle, so that the outdoor end of the hole is lower than the indoor end by about 12mm (0.5in). This will ensure proper water drainage.
3. Place the protective wall cuff in the hole. This protects the edges of the hole and will help seal it when you finish the installation process.

⚠ CAUTION

When drilling the wall hole, make sure to avoid wires, plumbing, and other sensitive components.

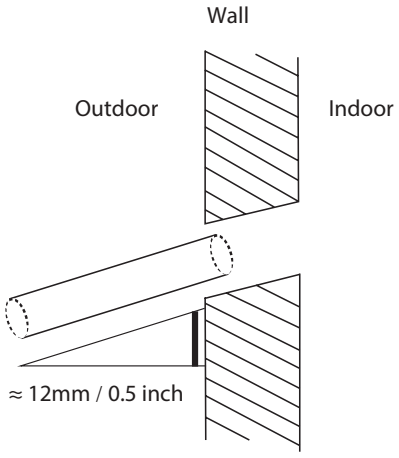

Step 8: Connect drain hose

The drainpipe is used to drain water away from the unit. Improper installation may cause unit and property damage.

⚠ CAUTION

- Insulate all piping to prevent condensation, which could lead to water damage.
- If the drainpipe is bent or installed incorrectly, water may leak and cause a water-level switch malfunction.
- In HEAT mode, the outdoor unit will discharge water. Ensure that the drain hose is placed in an appropriate area to avoid water damage and slippage.
- **DO NOT** pull the drainpipe forcefully. This could disconnect it.

NOTE ON PURCHASING PIPES

Installation requires a polyethylene tube (exterior diameter = 3.7-3.9cm, interior diameter = 3.2cm), which can be obtained at your localhardware store or dealer.

Indoor Drainpipe Installation

Install the drainpipe as illustrated in the following Figure.

1. Cover the drainpipe with heat insulation to prevent condensation and leakage.
2. Attach the mouth of the drain hose to the unit's outlet pipe. Sheath the mouth of the hose and clip it firmly with a pipe clasp.

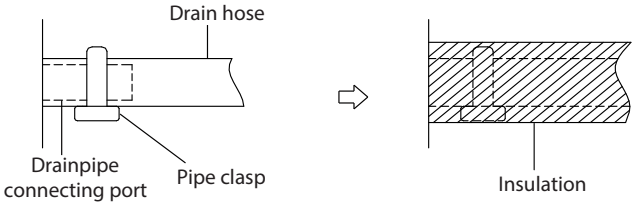

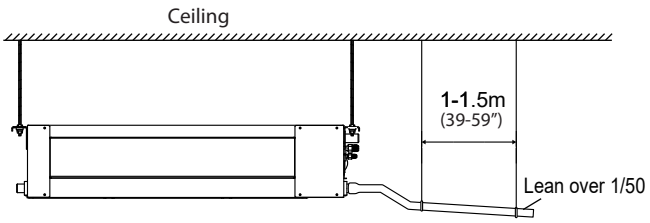

NOTE ON DRAINPIPE INSTALLATION

- When using an extended drainpipe, tightenthe indoor connection with an additionalprotection tube. This prevents it from pulling loose.
- The drainpipe should slope downward at a gradient of at least 1/100 to prevent water from flowing back into the air conditioner.
- To prevent the pipe from sagging, space hanging wires every 1-1.5m (39-59").
- If the outlet of the drainpipe is higher than the body's pump joint, use a lift pipe for the indoor unit's exhaust outlet. The lift pipe must be installed no higher than 55cm (21.7") from the ceiling board. The distance between the unit and the lift pipe must be less than 20cm (7.9"). Incorrect installation could cause water to flow back into the unit and flood.
- To prevent air bubbles, keep the drain hose level or slightly tiled up (<75mm / 3").

Drainpipe installation for units with a pump

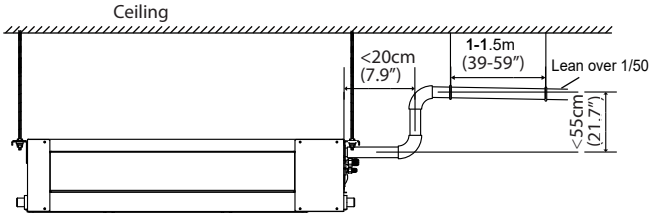

NOTE: When connecting multiple drainpipes, install the pipes as illustrated.

Units with a pump

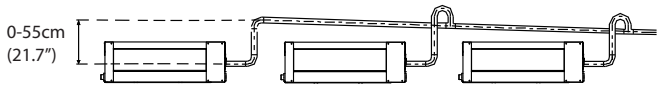

Units without a pump

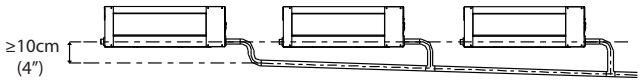

3. Pass the drain hose through the wall hole. Make sure the water drains to a safe location where it will not cause water damage or a slipping hazard.

NOTE: The drainpipe outlet should be at least 5cm (1.9") above the ground. If it touches the ground, the unit may become blocked and malfunction. If you discharge the water directly into a sewer, make sure that the drain has a U or S pipe to catch odors that might otherwise come back into the house.

Drainage test

Check whether the drainpipe is unhindered. This test should be performed on newly built houses before the ceiling is paved.

Units without a pump.

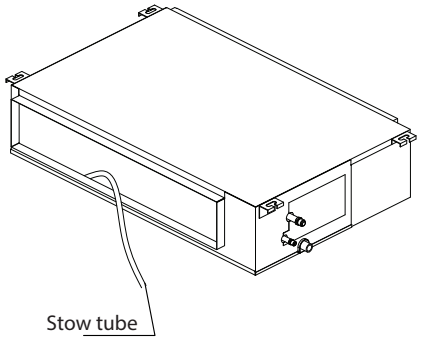

Fill the water pan with 2 liters of water.
Check that the drainpipe is unhindered.

Units with a pump.

1. Remove the test cover.
   Fill the water pan with 2 liters of water.

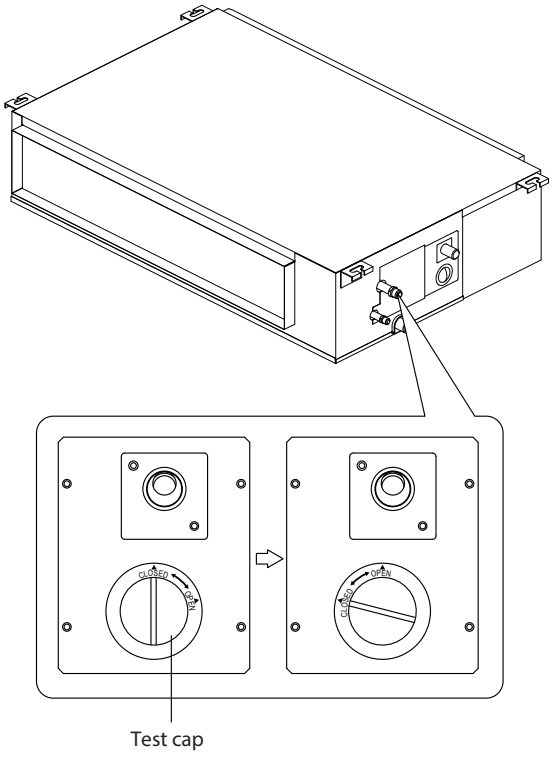

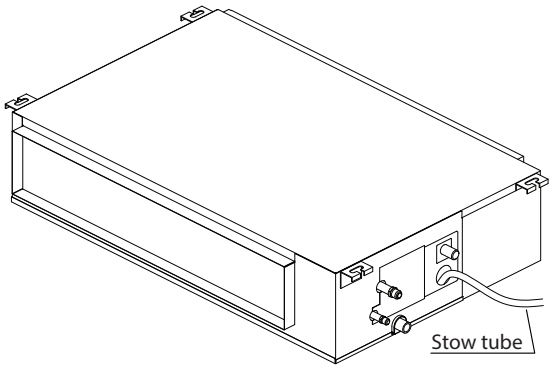

2. Turn on the unit in COOLING mode. You will hear the drain pump.Check whether the water is discharged properly (a 1-minute lag is possible, depending on the length of the drain pipe), Check whether water leaks from the joints.

3. Turn off the air conditioner and put the cap back on.

Outdoor Unit Installation

Install the unit by following local codes and regulations , there may be differ slightly between different regions.

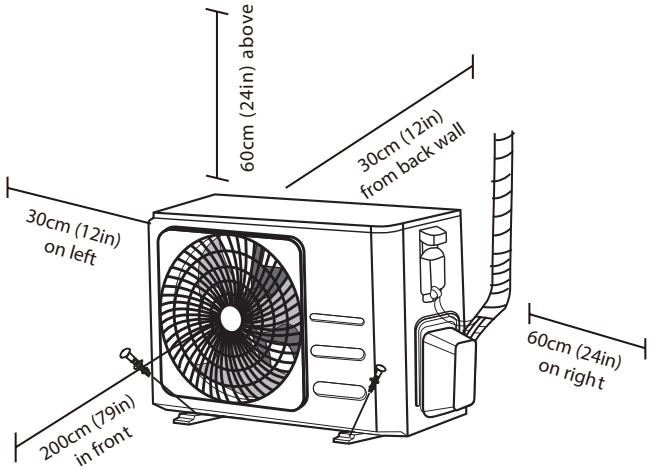

Installation Instructions – Outdoor unit

Step 1: Select installation location

Before installing the outdoor unit, you must choose an appropriate location. The following are standards that will help you choose an appropriate location for the unit.

Proper installation locations meet the following standards:

- ☑ Meets all spatial requirements shown in Installation Space Requirements above.
- ☑ Good air circulation and ventilation
- ☑ Firm and solid—the location can support the unit and will not vibrate
- ☑ Noise from the unit will not disturb others
- ☑ Protected from prolonged periods of direct sunlight or rain
- ☑ Where snowfall is anticipated, take appropriate measures to prevent ice buildup and coil damage.

DO NOT install unit in the following locations:

- ⊘ Near an obstacle that will block air inlets and outlets
- ⊘ Near a public street, crowded areas, or where noise from the unit will disturb others
- ⊘ Near animals or plants that will be harmed by hot air discharge
- ⊘ Near any source of combustible gas
- ⊘ In a location that is exposed to large amounts of dust
- ⊘ In a location exposed to a excessive amounts of salty air

SPECIAL CONSIDERATIONS FOR EXTREME WEATHER

If the unit is exposed to heavy wind:

Install unit so that air outlet fan is at a 90° angle to the direction of the wind. If needed, build a barrier in front of the unit to protect it from extremely heavy winds.
See Figures below.

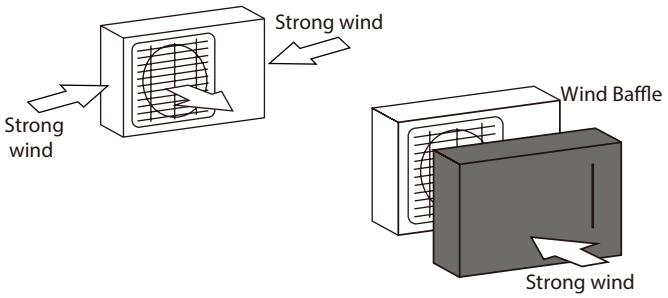

If the unit is frequently exposed to heavy rain or snow:

Build a shelter above the unit to protect it from the rain or snow. Be careful not to obstruct air flow around the unit.

If the unit is frequently exposed to salty air (seaside):

Use outdoor unit that is specially designed to resist corrosion.

Step 2: Install drain joint(Heat pump unit only)

Before bolting the outdoor unit in place, you must install the drain joint at the bottom of the unit. Note that there are two different types of drain joints depending on the type of outdoor unit.

If the drain joint comes with a rubber seal (see **Fig. A**), do the following:

1. Fit the rubber seal on the end of the drain joint that will connect to the outdoor unit.
2. Insert the drain joint into the hole in the base pan of the unit.
3. Rotate the drain joint 90° until it clicks in place facing the front of the unit.
4. Connect a drain hose extension (not included) to the drain joint to redirect water from the unit during heating mode.

If the drain joint doesn't come with a rubber seal (see **Fig. B**), do the following:

1. Insert the drain joint into the hole in the base pan of the unit. The drain joint will click in place.
2. Connect a drain hose extension (not included) to the drain joint to redirect water from the unit during heating mode.

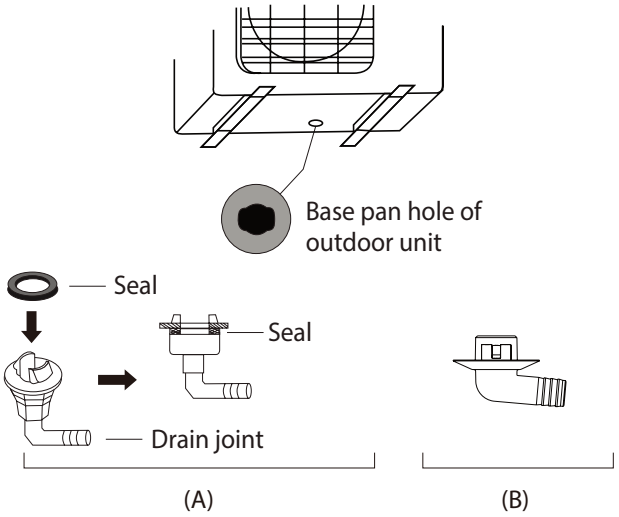

IN COLD CLIMATES

In cold climates, make sure that the drain hose is as vertical as possible to ensure swift water drainage. If water drains too slowly, it can freeze in the hose and flood the unit.

Step 3: Anchor outdoor unit

The outdoor unit can be anchored to the ground or to a wall-mounted bracket with bolt(M10). Prepare the installation base of the unit according to the dimensions below.

UNIT MOUNTING DIMENSIONS

The following is a list of different outdoor unit sizes and the distance between their mounting feet. Prepare the installation base of the unit according to the dimensions below.

Outdoor Unit Types and Specifications

Split Type Outdoor Unit

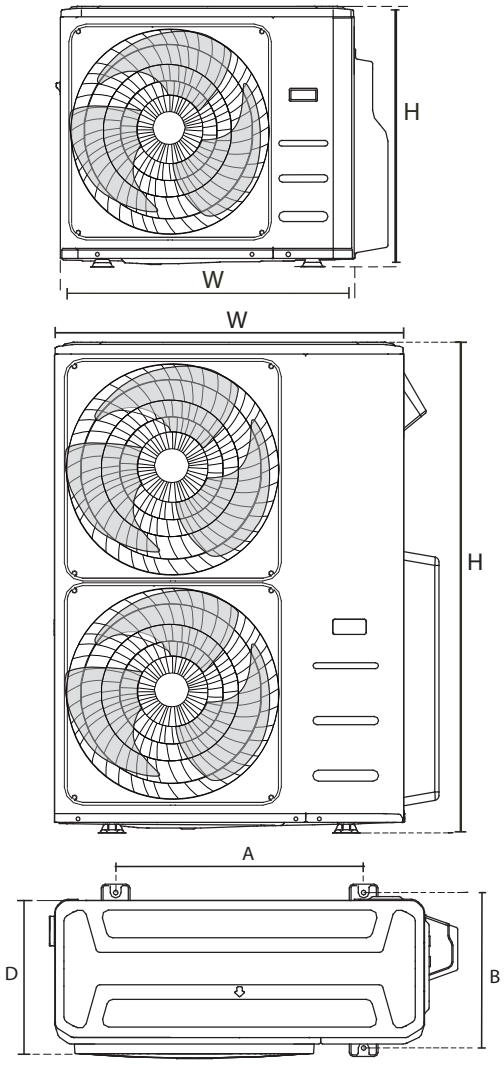

(unit: mm/inch)

Outdoor Unit Dimensions W x H x D	Mounting Dimensions	
	Distance A	Distance B
760x590x285 (29.9x23.2x11.2)	530 (20.85)	290 (11.4)
810x558x310 (31.9x22x12.2)	549 (21.6)	325 (12.8)
845x700x320 (33.27x27.5x12.6)	560 (22)	335 (13.2)
900x860x315 (35.4x33.85x12.4)	590 (23.2)	333 (13.1)
945x810x395 (37.2x31.9x15.55)	640 (25.2)	405 (15.95)
990x965x345 (38.98x38x13.58)	624 (24.58)	366 (14.4)
938x1369x392 (36.93x53.9x15.43)	634 (24.96)	404 (15.9)
900x1170x350 (35.4x46x13.8)	590 (23.2)	378 (14.88)
800x554x333 (31.5x21.8x13.1)	514 (20.24)	340 (13.39)
845x702x363 (33.27x27.6x14.3)	540 (21.26)	350 (13.8)
946x810x420 (37.24x31.9x16.53)	673 (26.5)	403 (15.87)
946x810x410 (37.24x31.9x16.14)	673 (26.5)	403 (15.87)
952x1333x410 (37.5x52.5x16.14)	634 (24.96)	404 (15.9)
952x1333x415 (37.5x52.5x16.34)	634 (24.96)	404 (15.9)
890x673x342 (35x26.5x13.46)	663 (26.1)	354 (13.94)
765x555x303 (30.1x21.8x11.9)	452 (17.8)	286(11.3)
805x554x330 (31.7x21.8x12.9)	511 (20.1)	317 (12.5)
770x555x300 (30.3x21.8x11.8)	487 (19.2)	298 (11.7)

Rows of series installation

The relations between H, A and L are as follows.

	L	A
L ≤ H	L ≤ 1/2H	25 cm / 9.8″ or more
	1/2H < L ≤ H	30 cm / 11.8″ or more
L > H	Can not be installed	

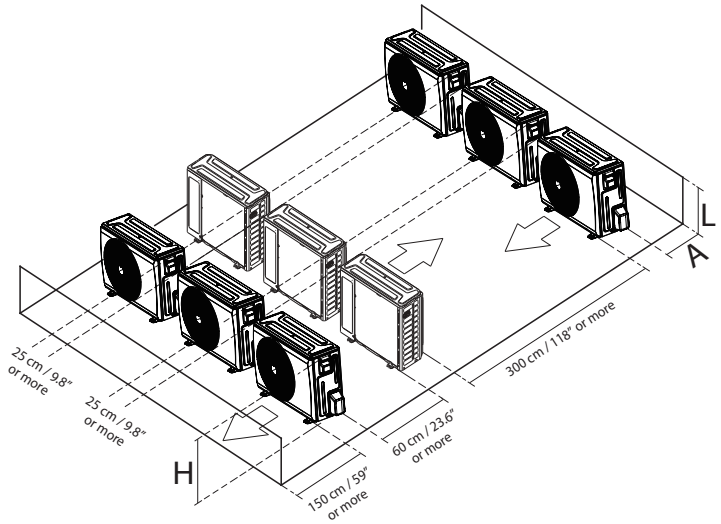

Refrigerant Piping Connection

When connecting refrigerant piping, **do not** let substances or gases other than the specified refrigerant enter the unit. The presence of other gases or substances will lower the unit's capacity, and can cause abnormally high pressure in the refrigeration cycle. This can cause explosion and injury.

Note on Pipe Length

Ensure that the length of the refrigerant pipe, the number of bends, and the drop height between the indoor and outdoor units meets the requirements shown in the following table :

The Maximum Length And Drop Height Based on Models. (Unit: m/ft.)

Type of model	Capacity (Btu/h)	Length of piping	Maximum drop height
North America, Australia and the eu frequency conversion Split Type	<15K	25/82	10/32.8
	≥15K - <24K	30/98.4	20/65.6
	≥24K - <36K	50/164	25/82
	≥36K - ≤60K	65/213	30/98.4
Other Split Type	12K	15/49	8/26
	18K-24K	25/82	15/49
	30K-36K	30/98.4	20/65.6
	42K-60K	50/164	30/98.4

⚠ CAUTION

Oil traps

If oil flows back into the outdoor unit's compressor, this might cause liquid compression or deterioration of oil return.
Oil traps in the rising gas piping can prevent this.
An oil trap should be installed every 6m(20ft) of vertical suction line riser (＜36000Btu/h unit).
An oil trap should be installed every 10m(32.8ft) of vertical suction line riser (≥36000Btu/h unit).

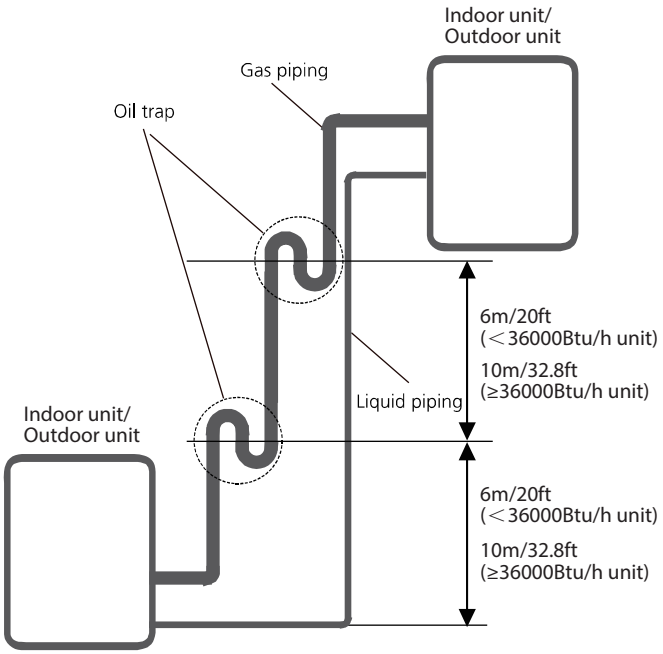

Connection Instructions – Refrigerant Piping

⚠ CAUTION

- The branching pipe must be installed horizontally. An angle of more than 10° may cause malfunction.
- **DO NOT** install the connecting pipe until both indoor and outdoor units have been installed.
- Insulate both the gas and liquid piping to prevent water leakage.

Step 1: Cut pipes

When preparing refrigerant pipes, take extra care to cut and flare them properly. This will ensure efficient operation and minimize the need for future maintenance.

1. Measure the distance between the indoor and outdoor units.
2. Using a pipe cutter, cut the pipe a little longer than the measured distance.
3. Make sure that the pipe is cut at a perfect 90° angle.

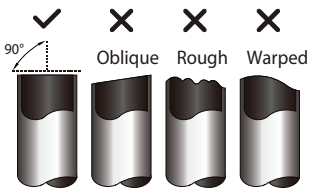

⊘ DO NOT DEFORM PIPE WHILE CUTTING

Be extra careful not to damage, dent, or deform the pipe while cutting. This will drastically reduce the heating efficiency of the unit.

Step 2: Remove burrs.

Burrs can affect the air-tight seal of refrigerant piping connection. They must be completely removed.

1. Hold the pipe at a downward angle to prevent burrs from falling into the pipe.
2. Using a reamer or deburring tool, remove all burrs from the cut section of the pipe.

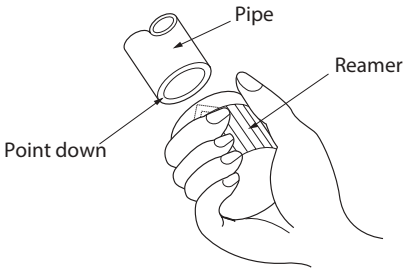

Step 3: Flare pipe ends

Proper flaring is essential to achieve an airtight seal.

1. After removing burrs from cut pipe, seal the ends with PVC tape to prevent foreign materials from entering the pipe.
2. Sheath the pipe with insulating material.
3. Place flare nuts on both ends of pipe. Make sure they are facing in the right direction, because you can't put them on or change their direction after flaring.

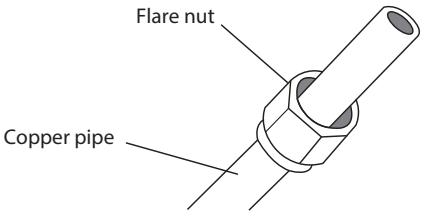

4. Remove PVC tape from ends of pipe when ready to perform flaring work.

5. Clamp flare form on the end of the pipe. The end of the pipe must extend beyond the flare form.

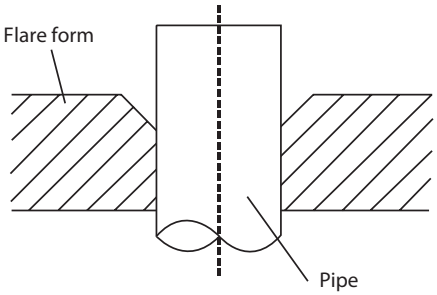

6. Place flaring tool onto the form.

7. Turn the handle of the flaring tool clockwise until the pipe is fully flared. Flare the pipe in accordance with the dimensions.

PIPING EXTENSION BEYOND FLARE FORM

Pipe gauge	Tightening torque	Flare dimension (A) (Unit: mm/Inch)		Flare shape
		Min.	Max.	
Ø 6.35	18-20 N.m (183-204 kgf.cm)	8.4/0.33	8.7/0.34	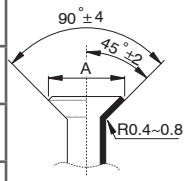
Ø 9.52	25-26 N.m (255-265 kgf.cm)	13.2/0.52	13.5/0.53	
Ø 12.7	35-36 N.m (357-367 kgf.cm)	16.2/0.64	16.5/0.65	
Ø 16	45-47 N.m (459-480 kgf.cm)	19.2/0.76	19.7/0.78	
Ø 19	65-67 N.m (663-683 kgf.cm)	23.2/0.91	23.7/0.93	
Ø 22	75-85N.m (765-867 kgf.cm)	26.4/1.04	26.9/1.06	

8. Remove the flaring tool and flare form, then inspect the end of the pipe for cracks and even flaring.

Step 4: Connect pipes

Connect the copper pipes to the indoor unit first, then connect it to the outdoor unit. You should first connect the low-pressure pipe, then the high-pressure pipe.

1. When connecting the flare nuts, apply a thin coat of refrigeration oil to the flared ends of the pipes.
2. Align the center of the two pipes that you will connect.

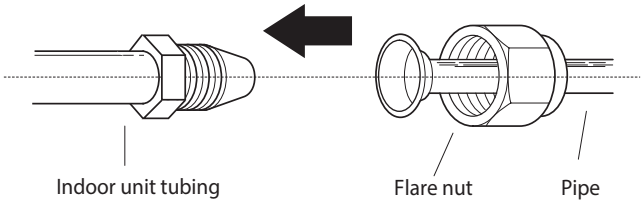

3. Tighten the flare nut as tightly as possible by hand.
4. Using a spanner, grip the nut on the unit tubing.
5. While firmly gripping the nut, use a torque wrench to tighten the flare nut according to the torque values in above table.

NOTE: Use both a spanner and a torque wrench when connecting or disconnecting pipes to/from the unit.

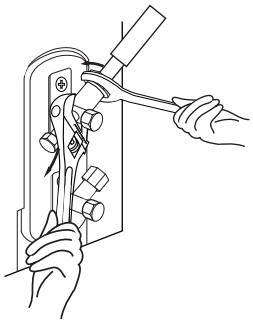

⚠ CAUTION

- Ensure to wrap insulation around the piping. Direct contact with the bare piping may result in burns or frostbite.
- Make sure the pipe is properly connected. Over tightening may damage the bell mouth and under tightening may lead to leakage.

NOTE ON MINIMUM BEND RADIUS

Carefully bend the tubing in the middle according to the diagram below. **DO NOT** bend the tubing more than 90° or more than 3 times.

Bend the pipe with thumb

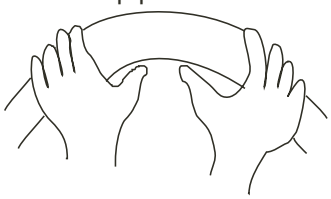

min-radius 10cm (3.9")

6. After connecting the copper pipes to the indoor unit, wrap the power cable, signal cable and the piping together with binding tape.

NOTE: DO NOT intertwine signal cable with other wires. While bundling these items together, do not intertwine or cross the signal cable with any other wiring.

7. Thread this pipeline through the wall and connect it to the outdoor unit.
8. Insulate all the piping, including the valves of the outdoor unit.
9. Open the stop valves of the outdoor unit to start the flow of the refrigerant between the indoor and outdoor unit.

⚠ CAUTION

Check to make sure there is no refrigerant leak after completing the installation work. If there is a refrigerant leak, ventilate the area immediately and evacuate the system (refer to the Air Evacuation section of this manual).

Wiring

! BEFORE PERFORMING ANY ELECTRICAL WORK, READ THESE REGULATIONS

1. All wiring must comply with local and national electrical codes, regulations and must be installed by a licensed electrician.
2. All electrical connections must be made according to the Electrical Connection Diagram located on the panels of the indoor and outdoor units.
3. If there is a serious safety issue with the power supply, stop work immediately. Explain your reasoning to the client, and refuse to install the unit until the safety issue is properly resolved.
4. Power voltage should be within 90-110% of rated voltage. Insufficient power supply can cause malfunction, electrical shock, or fire.
5. If connecting power to fixed wiring, a surgeprotector and main power switch should be installed.
6. If connecting power to fixed wiring, a switch or circuit breaker that disconnects all poles and has a contact separation of at least 1/8in (3mm) must be incorporated in the fixed wiring. The qualified technician must use an approved circuit breaker or switch.
7. Only connect the unit to an individual branch circuit outlet. Do not connect another appliance to that outlet.
8. Make sure to properly ground the air conditioner.
9. Every wire must be firmly connected. Loose wiring can cause the terminal to overheat, resulting in product malfunction and possible fire.
10. Do not let wires touch or rest against refrigerant tubing, the compressor, or any moving parts within the unit.
11. If the unit has an auxiliary electric heater, it mustbe installed at least 1 meter (40in) away from any combustible materials.

12.To avoid getting an electric shock, never touch the electrical components soon after the power supply has been turned off. After turning off the power, always wait 10 minutes or more before you touch the electrical components.

13. Make sure that you do not cross your electrical wiring with your signal wiring. This may cause distortion and interference.

14. The unit must be connected to the main outlet. Normally, the power supply must have a impedance of 32 ohms.

15. No other equipment should be connected to the same power circuit.

16. Connect the outdoor wires before connecting the indoor wires.

⚠ WARNING

BEFORE PERFORMING ANY ELECTRICAL OR WIRING WORK, TURN OFF THE MAIN POWER TO THE SYSTEM.

NOTE ON AIR SWITCH

When the maximum current of the air conditioner is more than 16A, an air switch or leakage protection switch with protective device shall be used(purchased seperately) .
When the maximum current of the air conditioner is less than 16A, the power cord of air conditioner shall be equipped with plug (purchased seperately) .
In North America , the applicance should be wired according to NEC and CEC requirements.

(A)

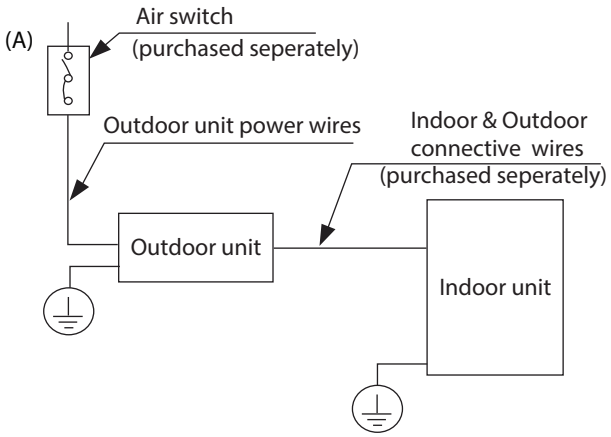

(B)

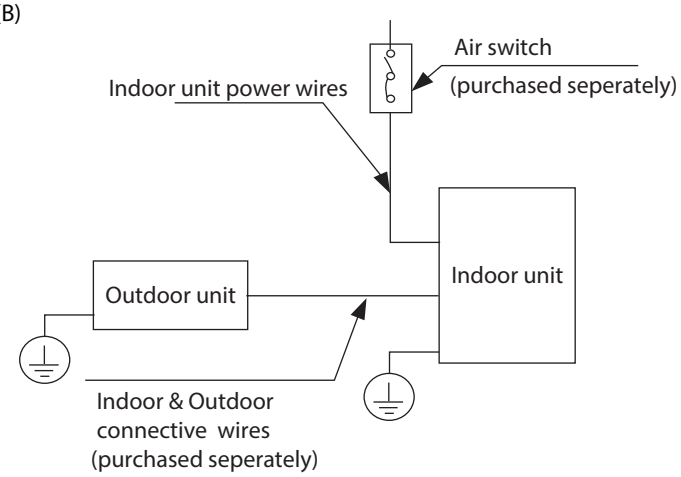

(C)

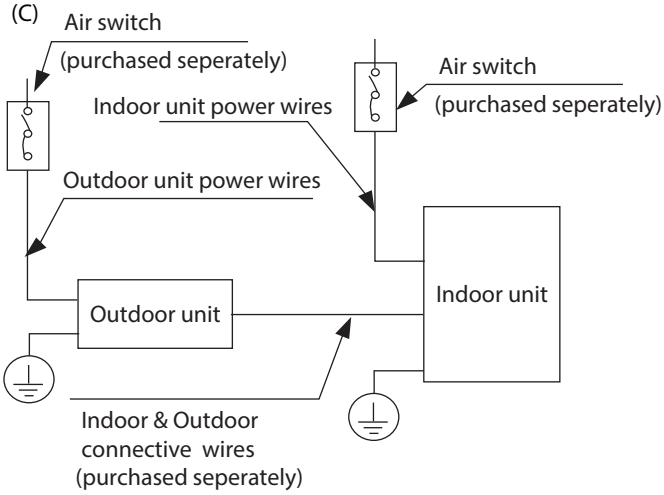

(D) (Only for the North American)

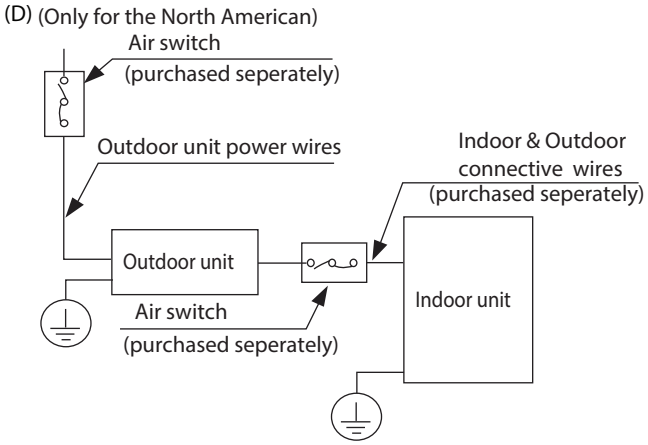

NOTE: The cographs are for explanation purpose only. Your machine may be slightly different. The actual shape shall prevail.

Outdoor Unit Wiring

⚠ WARNING

Before performing any electrical or wiring work, turn off the main power to the system.

1. Prepare the cable for connection
   a. You must first choose the right cable size. Be sure to use H07RN-F cables.

NOTE: In North America, choose the cable type according to the local electrical codes and regulations.

Minimum Cross-Sectional Area of Power and Signal Cables (For reference)

Rated Current of Appliance (A)	Nominal Cross-Sectional Area (mm²)
> 3 and ≤ 6	0.75
> 6 and ≤ 10	1
> 10 and ≤ 16	1.5
> 16 and ≤ 25	2.5
> 25 and ≤ 32	4
> 32 and ≤ 40	6

CHOOSE THE RIGHT CABLE SIZE

The size of the power supply cable, signal cable, fuse, and switch needed is determined by the maximum current of the unit. The maximum current is indicated on the nameplate located on the side panel of the unit. Refer to this nameplate to choose the right cable, fuse, or switch.

NOTE: In North America, please choose the right cable size according to the Minimum Circuit Ampacity indicated on the nameplate of the unit.

   b. Using wire strippers, strip the rubber jacketfrom both ends of the signal cable to reveal approximately 15cm (5.9") of wire.
   c. Strip the insulation from the ends.
   d. Using a wire crimper, crimp u-lugs on the ends.

NOTE: When connecting the wires, strictly follow the wiring diagram found inside the electrical box cover.

2. Remove the electric cover of the outdoor unit. If there is no cover on the outdoor unit, take off the bolts from the maintenance board and remove the protection board.

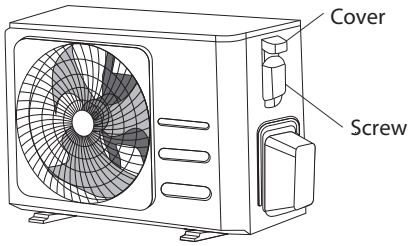

3. Connect the u-lugs to the terminals
   Match the wire colors/labels with the labels on the terminal block. Firmly screw the u-lug of each wire to its corresponding terminal.
4. Clamp down the cable with the cable clamp.
5. Insulate unused wires with electrical tape. Keep them away from any electrical or metal parts.
6. Reinstall the cover of the electric control box.

Indoor Unit Wiring

1. Prepare the cable for connection.
   a. Using wire strippers, strip the rubber jacket from both ends of the signal cable to reveal about 15cm (5.9") of the wire.
   b. Strip the insulation from the ends of the wires.
   c. Using a wire crimper, crimp the u-lugs to the ends of the wires.
2. Remove the cover of the electric control box on your indoor unit.
3. Connect the u-lugs to the terminals.
   Match the wire colors/labels with the labels on the terminal block. Frmly screw the u-lug of each wire to its corresponding terminal. Refer to the Serial Number and Wiring Diagram located on the cover of the electric control box.

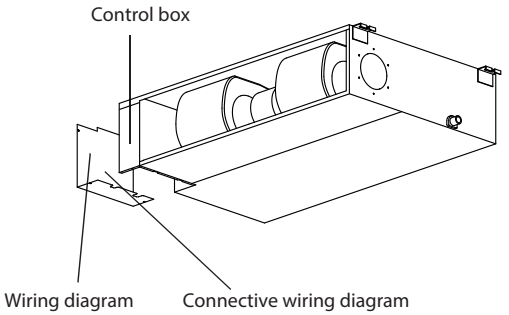

Magnetic ring(if supplied and packed with the accessories)

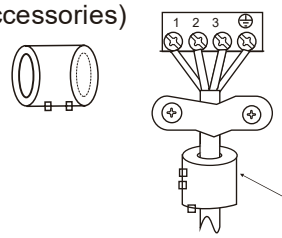

⚠CAUTION

- While connecting the wires, please strictly follow the wiring diagram.
- The refrigerant circuit can become very hot. Keep the interconnection cable away from the copper tube.

4. Clamp down the cable with the cable clamp.The cable must not be loose or pull on the u-lugs.
5. Reattach the electric box cover.

Power Specifications (Not applicable for North America)

NOTE: Electric auxiliary heating type circuit breaker/fuse need to add more than 10 A.

Indoor Power Supply Specifications

MODEL(Btu/h)		≤18K	19K~24K	25K~36K	37K~48K	49K~60K
POWER	PHASE	1 Phase	1 Phase	1 Phase	1 Phase	1 Phase
	VOLT	208-240V	208-240V	208-240V	208-240V	208-240V
CIRCUIT BREAKER/ FUSE(A)		25/20	32/25	50/40	70/55	70/60

MODEL(Btu/h)		≤36K	37K~60K	≤36K	37K~60K
POWER	PHASE	3 Phase	3 Phase	3 Phase	3 Phase
	VOLT	380-420V	380-420V	208-240V	208-240V
CIRCUIT BREAKER/FUSE(A)		25/20	32/25	32/25	45/35

Outdoor Power Supply Specifications

MODEL(Btu/h)		≤18K	19K~24K	25K~36K	37K~48K	49K~60K
POWER	PHASE	1 Phase	1 Phase	1 Phase	1 Phase	1 Phase
	VOLT	208-240V	208-240V	208-240V	208-240V	208-240V
CIRCUIT BREAKER/ FUSE(A)		25/20	32/25	50/40	70/55	70/60

MODEL(Btu/h)		≤36K	37K~60K	≤36K	37K~60K
POWER	PHASE	3 Phase	3 Phase	3 Phase	3 Phase
	VOLT	380-420V	380-420V	208-240V	208-240V
CIRCUIT BREAKER/FUSE(A)		25/20	32/25	32/25	45/35

Independent Power Supply Specifications

MODEL(Btu/h)		≤18K	19K~24K	25K~36K	37K~48K	49K~60K
POWER (indoor)	PHASE	1 Phase	1 Phase	1 Phase	1 Phase	1 Phase
	VOLT	208-240V	208-240V	208-240V	208-240V	208-240V
CIRCUIT BREAKER/ FUSE(A)		15/10	15/10	15/10	15/10	15/10
POWER (outdoor)	PHASE	1 Phase	1 Phase	1 Phase	1 Phase	1 Phase
	VOLT	208-240V	208-240V	208-240V	208-240V	208-240V
CIRCUIT BREAKER/ FUSE(A)		25/20	32/25	50/40	70/55	70/60

MODEL(Btu/h)		≤36K	37K~60K	≤36K	37K~60K
POWER (indoor)	PHASE	1 Phase	1 Phase	1 Phase	1 Phase
	VOLT	208-240V	208-240V	208-240V	208-240V
CIRCUIT BREAKER/FUSE(A)		15/10	15/10	15/10	15/10
POWER (outdoor)	PHASE	3 Phase	3 Phase	3 Phase	3 Phase
	VOLT	380-420V	380-420V	208-240V	208-240V
CIRCUIT BREAKER/FUSE(A)		25/20	32/25	32/25	45/35

Inverter Type A/C Power Specifications

MODEL(Btu/h)		≤18K	19K~24K	25K~36K	37K~48K	49K~60K
POWER (indoor)	PHASE	1 Phase	1 Phase	1 Phase	1 Phase	1 Phase
	VOLT	220-240V	220-240V	220-240V	220-240V	220-240V
CIRCUIT BREAKER/ FUSE(A)		15/10	15/10	15/10	15/10	15/10
POWER (outdoor)	PHASE	1 Phase	1 Phase	1 Phase	1 Phase	1 Phase
	VOLT	208-240V	208-240V	208-240V	208-240V	208-240V
CIRCUIT BREAKER/ FUSE(A)		25/20	25/20	40/30	50/40	50/40

MODEL(Btu/h)		≤36K	37K~60K	≤36K	37K~60K
POWER (indoor)	PHASE	1 Phase	1 Phase	1 Phase	1 Phase
	VOLT	220-240V	220-240V	220-240V	220-240V
CIRCUIT BREAKER/FUSE(A)		15/10	15/10	15/10	15/10
POWER (outdoor)	PHASE	3 Phase	3 Phase	3 Phase	3 Phase
	VOLT	380-420V	380-420V	208-240V	208-240V
CIRCUIT BREAKER/FUSE(A)		25/20	32/25	32/25	40/30

Air Evacuation

Preparations and Precautions

Air and foreign matter in the refrigerant circuit can cause abnormal rises in pressure, which can damage the air conditioner, reduce its efficiency, and cause injury. Use a vacuum pump and manifold gauge to evacuate the refrigerant circuit, removing any non-condensable gas and moisture from the system.

Evacuation should be performed upon initial installation and when unit is relocated.

BEFORE PERFORMING EVACUATION

- ☑ Check to make sure the connective pipes between the indoor and outdoor units are connected properly .
- ☑ Check to make sure all wiring is connected properly.

Evacuation Instructions

1. Connect the charge hose of the manifold gauge to service port on the outdoor unit's low pressure valve.
2. Connect another charge hose from the manifold gauge to the vacuum pump.
3. Open the Low Pressure side of the manifold gauge. Keep the High Pressure side closed.
4. Turn on the vacuum pump to evacuate the system.
5. Run the vacuum for at least 15 minutes, or until the Compound Meter reads -76cmHG (-10^5Pa).

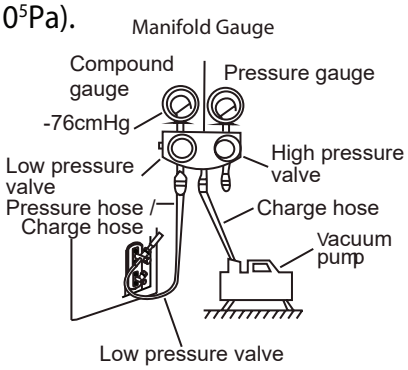

6. Close the Low Pressure side of the manifold gauge, and turn off the vacuum pump.
7. Wait for 5 minutes, then check that there has been no change in system pressure.
8. If there is a change in system pressure, refer to Gas Leak Check section for information on how to check for leaks. If there is no change in system pressure, unscrew the cap
9. from the packed valve (high pressure valve). Insert hexagonal wrench into the packed valve (high pressure valve) and open the valve by turning the wrench in a 1/4 counterclockwise turn. Listen for gas to exit the system, then close the valve after 5 seconds.
10. Watch the Pressure Gauge for one minute to make sure that there is no change in pressure. The Pressure Gauge should read slightly higher than atmospheric pressure.
11. Remove the charge hose from the service port.

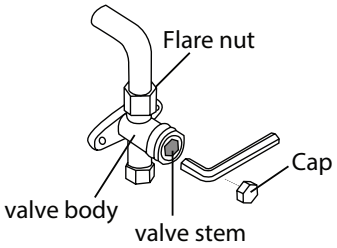

12. Using hexagonal wrench, fully open both the high pressure and low pressure valves.
13. Tighten valve caps on all three valves (service port, high pressure, low pressure) by hand. You may tighten it further using a torque wrench if needed.

! OPEN VALVE STEMS GENTLY

When opening valve stems, turn the hexagonal wrench until it hits against the stopper. Do not try to force the valve to open further.

Note on Adding Refrigerant

Some systems require additional charging depending on pipe lengths. The standard pipe length varies according to local regulations. For example, in North America, the standard pipe length is 7.5m (25'). In other areas, the standard pipe length is 5m (16'). The refrigerant should be charged from the service port on the outdoor unit's low pressure valve. The additional refrigerant to be charged can be calculated using the following formula:

	Liquid Side Diameter		
	ϕ6.35(1/4")	ϕ9.52(3/8")	ϕ12.7(1/2")
R22 (orifice tube in the indoor unit):	(Total pipe length - standard pipe length)x 30g (0.32oZ)/m(ft)	(Total pipe length - standard pipe length)x 65g(0.69oZ)/m(ft)	(Total pipe length - standard pipe length)x 115g(1.23oZ)/m(ft)
R22 (orifice tube in the outdoor unit):	(Total pipe length - standard pipe length) x15g(0.16oZ)/m(ft)	(Total pipe length - standard pipe length) x30(0.32oZ)/m(ft)	(Total pipe length - standard pipe length) x60g(0.64oZ)/m(ft)
R410A: (orifice tube in the indoor unit):	(Total pipe length - standard pipe length) x30g(0.32oZ)/m(ft)	(Total pipe length - standard pipe length) x65g(0.69oZ)/m(ft)	(Total pipe length - standard pipe length) x115g(1.23oZ)/m(ft)
R410A: (orifice tube in the outdoor unit):	(Total pipe length - standard pipe length) x15g(0.16oZ)/m(ft)	(Total pipe length - standard pipe length) x30g(0.32oZ)/m(ft)	(Total pipe length - standard pipe length) x65g(0.69oZ)/m(ft)
R32 :	(Total pipe length - standard pipe length)x 12g(0.13oZ)/m(ft)	(Total pipe length - standard pipe length)x 24g(0.26oZ)/m(ft)	(Total pipe length - standard pipe length)x 40g(0.42oZ)/m(ft)

⚠ **CAUTION** **DO NOT** mix refrigerant types.

Only for Australia models :

- This unit contains factory charged refrigerant covering 20m of refrigerant piping and additional refrigerant charge on the installation site is not required for an installation with up to 20m refrigerant piping. When refrigerant piping exceeds 20m, additionally charge an amount calculated from the pipe length and the above table for the portion in excess of 20m.
- If an existing pipe system is used, a required refrigerant charge volume will vary depending on the liquid pipe size.

Formula to calculate the volume of additional refrigerant required :

Additional charge volume (kg) = { Main length (m) – Factory charged volume 20(m) } × 0.03(kg/m)

- Make sure to remove the additional refrigerant amount according to the nameplate rated charge (under 5m refrigerant piping) under market or government verification testing .

Test Run

Before Test Run

A test run must be performed after the entire system has been completely installed. Confirm the following points before performing the test:

a) Indoor and outdoor units are properly installed.
b) Piping and wiring are properly connected.
c) No obstacles near the inlet and outlet of the unit that might cause poor performance or product malfunction.
d) Refrigeration system does not leak.
e) Drainage system is unimpeded and draining to a safe location.
f) Heating insulation is properly installed.
g) Grounding wires are properly connected.
h) Length of the piping and additional refrigerant stow capacity have been recorded.
i) Power voltage is the correct voltage for the air conditioner.

⚠ CAUTION

Failure to perform the test run may result in unit damage, property damage, or personal injury.

Test Run Instructions

1. Open both the liquid and gas stop valves.
2. Turn on the main power switch and allow the unit to warm up.
3. Set the air conditioner to COOL mode.
4. For the Indoor Unit
   a. Ensure the remote control and its buttons work properly.
   b. Ensure the louvers move properly and can be changed using the remote control.
   c. Double check to see if the room temperature is being registered correctly.
   d. Ensure the indicators on the remote control and the display panel on the indoor unit work properly.
   e. Ensure the manual buttons on the indoor unit works properly.
   f. Check to see that the drainage system is unimpeded and draining smoothly.
   g. Ensure there is no vibration or abnormal noise during operation.
5. For the Outdoor Unit
   a. Check to see if the refrigeration system is leaking.
   b. Make sure there is no vibration or abnormal noise during operation.
   c. Ensure the wind, noise, and water generated by the unit do not disturb your neighbors or pose a safety hazard.
6. Drainage Test
   a. Ensure the drainpipe flows smoothly. New buildings should perform this test before finishing the ceiling.
   b. Remove the test cover. Add 2,000ml of water to the tank through the attached tube.
   c. Turn on the main power switch and run the air conditioner in COOL mode.
   d. Listen to the sound of the drain pump to see if it makes any unusual noises.
   e. Check to see that the water is discharged. It may take up to one minute before the unit begins to drain depending on the drainpipe.
   f. Make sure that there are no leaks in any of the piping.
   g. Stop the air conditioner. Turn off the main power switch and reinstall the test cover.

NOTE: If the unit malfunctions or does not operate according to your expectations, please refer to the Troubleshooting section of the Owner's Manual before calling customer service.

Packing and unpacking the unit

Instructions for packing unpacking the unit:

Unpacking:
Indoor unit:
1.Cut the packing belt.
2. Unpack the package.
3. Take out the packing cushion and packing support.
4. Remove the packing film.
5. Take out the accessories.
6. Lift the machine out and lay it flat.

Outdoor Unit
1. Cut the packing belt.
2. Take the unit out of the package.
3. Remove the foam from the unit.
4. Remove the packing film from the unit.

Packing:
Indoor unit:
1. Put the indoor unit into the packing film.
2. Put the accessories in.
3. Place the packing cushion and packing support.
4. Put the indoor unit into the package.
5. Close the package and seal it.
6. Using the packing belt if necessary.

Outdoor unit:
1. Put the outdoor unit into the packing film.
2. Put the bottom foam into the box.
3. Put the outdoor unit into the package, then put the upper packaging foam on the unit.
4. Close the package and seal it.
5. Using the packing belt if necessary.

NOTE: Please keep all packaging items if you may need in the future.

Impedance Information
(Applicable to some countries of Middle East Area only)

To be in compliance with EN61000-3-11, the product MTI-48HWN1-R shall be connected only to a supply of the system impedance: |Zsys| = 0.267802236 Ω or less. Before connecting the product to public power network, please consult your local power supply authority to ensure the power network meet above requirement.

To be in compliance with EN61000-3-11, the product MTI-60HWN1-R shall be connected only to a supply of the system impedance: |Zsys| = 0.214 Ω or less. Before connecting the product to public power network, please consult your local power supply authority to ensure the power network meet above requirement.

To be in compliance with EN61000-3-11, the product MTIT4-36CWN1-QC5 (Indoor Unit: MTIT4-36CWN1-QC5 , Outdoor Unit:MOT4DU-36CN1-QC5)shall be connected only to a supply of the system impedance: |Zsys| = 0.021893 Ω or less. Before connecting the product to public power network, please consult your local power supply authority to ensure the power network meet above requirement.

To be in compliance with EN61000-3-11, the product MTIT4-36CWN1-QC5 (Indoor Unit: MTIT4-36CWN1-QC5 , Outdoor Unit:MOT4V-36CN1-QC5)shall be connected only to a supply of the system impedance: |Zsys| = 0.024 Ω or less. Before connecting the product to public power network, please consult your local power supply authority to ensure the power network meet above requirement.

To be in compliance with EN61000-3-11, the product MTIT-32CWN1-QC5 shall be connected only to a supply of the system impedance: |Zsys| = 0.083964 Ω or less. Before connecting the product to public power network, please consult your local power supply authority to ensure the power network meet above requirement.

The design and specifications are subject to change without prior notice for product improvement. Consult with the sales agency or manufacturer for details. Any updates to the manual will be uploaded to the service website, please check for the latest version.

QS001UI-T2(B)
16123000002853
20210915

备注：

1. 基准说明书为单英文版本，不含型号及商标，也无制造商信息，请业务根据所销售国家或者区域的法规要求（也可以咨询认证工程师），自行判断是否可以直接使用基准说明书，还是重新申请订单编码说明书，使用对应国家的官方语言，增加型号及其它法规要求信息。

2. 非可燃冷媒机型（R32/R290）机型，可以将P7页上的关于R32的安规内容删除：

⚠ **WARNING for Using R32/R290 Refrigerant**

但不可以删除下面的：European Disposal Guidelines那块内容。

3. 客户订制面板和显示，如果显示功能跟基准相同，可以直接使用基准说明书（基准不区分面板差异，如果客户要求体现实际面板效果，那就按客户要求重新做书），如果显示有差异的话，只需替换P9页的显示功能说明内容。

4. P41页内容只适合部分中东机型，由于电压波动和闪烁不合格，增加阻抗声明，其它机型可以直接删除此页内容。

此面及后面的页面无需印刷

技术 要求：

1.80克/平方双胶纸

2.尺寸：A4

3.颜色：黑白

4.注意：排版时注意页码数字都是靠外面的，以便翻阅

5.装订。

修改记录：
1..P40增加打包和拆包说明内容。——沙特新能效标准升级要求，安规范畴，
技术支持：余明/牛强 2021.7.16(N10727982)
2.封面IMPORTANT NOTE:增加SAFETY MANUAL(if any)单词，提示R32用户看安规警示语说明书，认证公司提出。——7.16
3.P28增加外机尺寸最后三个，对应X2\X3\BA01——7.26
4.P26修改外机雪景安装需要按机构要求的描述，Where snowfall is anticipated, raise the unit above the base pad to prevent ice buildup and coil damage. Mount the unit high enough to be above the average accumulated area snowfall. The minimum height must be 18 inches
改为where snowfall is anticipated, take appropriate measures to preventice buildup and coil damage。
——9.15品质提出的问题（PR0000555550）
5.P33更改接地标识符号⏚
6.P16附件清单更新：增加转接头示意图Fig.b，增加备注**NOTE: When the connecting pipes of indoor and outdoor units do not match, this part needs to be added.(See the Fig.a orFig.b)**
——9.16可靠性提出增加备注（22023011003414机型增加转接头）张桃/杨晓东