INSTALLATION AND OWNER'S MANUAL

All DC Inverter VRF Outdoor Unit

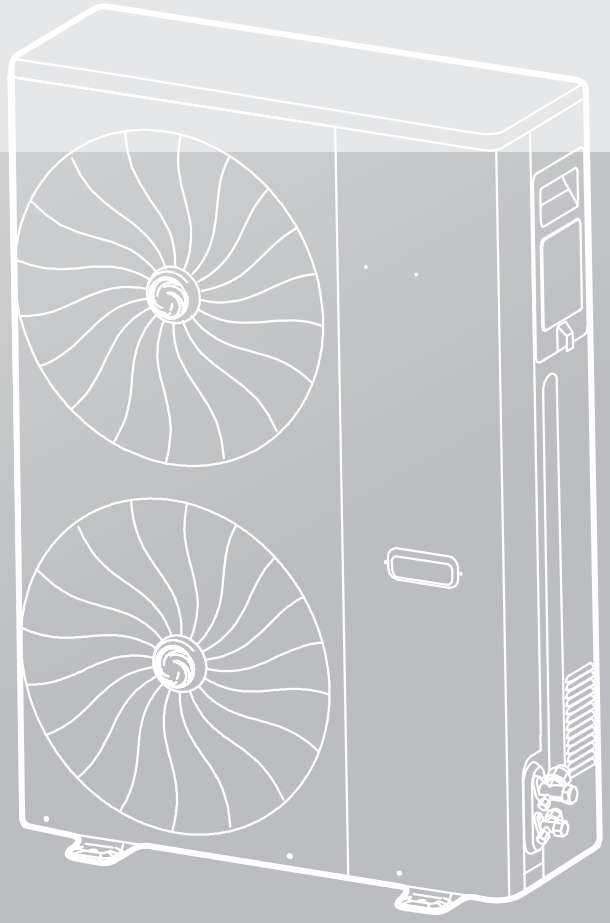

IMPORTANT NOTE:

Original instructions
Please read this manual carefully and keep it for future reference.
All the pictures in this manual are for illustration purpose only.

CONTENTS

ABOUT THE DOCUMENTATION 01

SAFETY SIGNS 01

OPERATION 01

1 USER SAFETY INSTRUCTIONS 01

2 SYSTEM INFORMATION 01

3 USER INTERFACE 02

4 BEFORE OPERATION 02

5 OPERATION 02

- 5.1 Operation Range 02
- 5.2 Operating the System 02
- 5.3 Dry Program 03

6 MAINTENANCE AND SERVICE 03

- 6.1 About the Refrigerant 04
- 6.2 After-sales Service and Warranty 04
- 6.3 Maintenance Before Long Shutdown 04
- 6.4 Maintenance After Long Shutdown 04

7 TROUBLESHOOTING 05

- 7.1 Error Code: Overview 06
- 7.2 Symptom: Non Air Conditioning Malfunctions 08

8 RELOCATION 08

9 DISPOSAL 08

INSTALLATION 09

1 OVERVIEW 09

- 1.1 Safety Instructions for Installer 09
- 1.2 Notice 10

2 PACKING BOX 11

- 2.1 Overview 11
- 2.2 Transport 11
- 2.3 Unpack the Outdoor Unit 12
- 2.4 Taking Out Accessories of Outdoor Unit 12
- 2.5 Layout 12

3 OUTDOOR UNIT COMBINATION 12

- 3.1 Overview 12
- 3.2 Branch Joints 12
- 3.3 Recommended Outdoor Unit Combination 13

4 PREPARATIONS BEFORE INSTALLATION 13

- 4.1 Overview 13
- 4.2 Choosing and Preparing the Installation Site 13
- 4.3 Selecting and Preparing the Refrigerant Piping 15
- 4.4 Selecting and Preparing the Electrical Wiring 19

5 OUTDOOR UNIT INSTALLATION 20

- 5.1 Overview 20
- 5.2 Opening the Unit 20
- 5.3 Mounting the Outdoor Unit 20
- 5.4 Piping Installation 21
- 5.5 Flushing Pipes 24
- 5.6 Gas Tightness Test 24
- 5.7 Vacuum Drying 25
- 5.8 Piping Insulation 26
- 5.9 Refrigerant Charging 26
- 5.10 Electrical Wiring 27

6 COMMISSIONING 31

- 6.1 Overview 31
- 6.2 Precautions When Commissioning 31
- 6.3 Checklist Before Commissioning 31
- 6.4 Correcting After Abnormal Completion of Test Run 32
- 6.5 Operating This Unit 32

7 MAINTENANCE AND REPAIR 32

- 7.1 Overview 32
- 7.2 Safety Precautions 32

8 TECHNICAL DATA 32

- 8.1 Dimensions 32
- 8.2 Component Layout and Refrigerant Circuits 33

ABOUT THE DOCUMENTATION

NOTE

- Make sure that the user has the printed documentation and ask him/her to keep it for future reference.

Target audience

Authorised installers + end users

NOTE

- This appliance is intended to be used by expert or trained users in shops, in light industry, and on farms, or for commercial and household use by lay persons.

⚠ WARNING

- Please thoroughly read and ensure that you fully understand the safety precautions (including the signs and symbols) in this manual, and follow relevant instructions during use to prevent damage to health or property.

Documentation set

This document is part of a documentation set. The complete set consists of:

- General safety precautions:
  - Safety instructions that you must read before installing
- Indoor unit installation and operation manual:
  - Installation and operation instructions
- Repeater installation and operation manual:
  - Installation and operation instructions

Technical engineering data

Latest revisions of the supplied documentation may be available via your dealer.

The original documentation is written in English. All other languages are translations.

SAFETY SIGNS

The precautions and things to note in this document involve very important information. Please read them carefully.

⚠ DANGER

Indicates a hazard with a high level of risk which, if not avoided, will result in death or serious injury.

⚠ WARNING

Indicates a hazard with a medium level of risk which, if not avoided, could result in death or serious injury.

⚠ CAUTION

Indicates a hazard with a low level of risk which, if not avoided, could result in minor or moderate injury.

NOTE

A situation that may cause damage to the equipment or loss of property.

INFORMATION

Indicates a useful hint or additional information.

OPERATION

1 USER SAFETY INSTRUCTIONS

- Unit is marked with the following symbols:



This symbol indicates that electrical and electronic products must not be mixed with unsorted household waste. Do not attempt to dismantle the system on your own. All works involved in dismantling the system, handling the refrigerant, oil and other components must be carried out by authorized installation personnel, and the works must be carried out in accordance with the applicable law. The unit must be disposed of and treated at special treatment facilities for reuse, and recycling. By making sure that this product is properly handled and disposed of, you help to minimize the negative impact on the environment and human health. For more information, please contact the installation personnel or local organization.

2 SYSTEM INFORMATION

INFORMATION

The equipment must be operated by professionals or trained people, and it is mainly used for commercial purposes such as stores, shopping malls and large office buildings.

A-weighted sound pressure of all the units level are all below 64 dB.

This unit can be used for heating/cooling.

NOTE

- Do not use the air conditioning system for other purposes. In order to avoid quality degradation, do not use the unit to cool precision instruments, food, plants, animals or works of art.
- For system maintenance and expansion, please contact professional staff.
- The units are partial unit air conditioners, complying with partial unit requirements of this International Standard, and must only be connected to other units that have been confirmed as complying to corresponding partial unit requirements of this International Standard.

3 USER INTERFACE

⚠ CAUTION

- Please contact the dealer if you need to check and adjust the internal components.
- This operation manual only provides information on the main functions of this system.

4 BEFORE OPERATION

⚠ WARNING

- This unit consists of electrical components and hot parts (danger of electric shock and scald).
- Before you operate this unit, make sure that the installation personnel have installed it properly.
- This appliance is not intended for use by persons (including children) with reduced physical, sensory or mental capabilities, or lack of experience and knowledge, unless they have been given supervision or instruction concerning use of the appliance by a person responsible for their safety.
- Children should be supervised to ensure that they do not play with the appliance.

⚠ CAUTION

- The air outlet must not be directed at any human body as it is not conducive to the person's health to be exposed to long periods of moving cold/hot air.
- If the air conditioner is used together with a device that comes with a burner, make sure the room is fully ventilated to prevent anoxia (oxygen insufficiency).

⚠ CAUTION

- Do not operate the air conditioner when applying fumigated insecticide in the room. This may cause chemicals to be deposited inside the unit, and pose a danger to the health of people allergic to chemicals. This unit should only be serviced and maintained by a professional air conditioning service engineer. Incorrect servicing or maintenance can cause electric shock, fire or leakage of water. Contact your dealer for servicing and maintenance.
- Cleaning and user maintenance shall not be made by children without supervision.
- The appliance shall be installed in accordance with national wiring regulations.
- This appliance is intended to domestic and used by expert or trained users in shops, in light industry and on farms, or for commercial use by lay persons.

5 OPERATION

5.1 Operation Range

Table 5.1

IDU Type	Common indoor unit	
Mode	Cooling	Heating
Outdoor temperature	-15~55°C	-20~27°C
Indoor temperature	17~32°C	0~30°C
Indoor humidity	≤80%(a)	
(a) Condensate might form on the unit's surface if the humidity is above 80%		

NOTE

The safety device will be triggered if the temperature or humidity exceeds these conditions, and the air conditioner may not run.

5.2 Operating the System

5.2.1 System operation

The operating program varies with different combinations of outdoor unit and controller.

To protect this unit, turn on the main power supply 12 hours before operation.

If there is a power outage while the unit is running, the unit will automatically restart its operation when the power supply resumes.

5.2.2 Cooling, heating, fan only and auto operations

The indoor units in the air conditioner can be controlled separately, but the indoor units in the same refrigerant system cannot operate in the heating and cooling modes at the same time.

When the cooling and heating modes conflict, the mode is determined based on the setting of the " Menu mode" of the outdoor unit.

Table 5.2

Automatic priority mode	Automatic selection of heating or cooling priority based on the ambient temperature.
Cooling priority mode	When you select the cooling mode as the priority mode, the heating operations in the indoor unit stops running, while the cooling mode will operate as usual;
VIP priority mode or voting priority mode	If the VIP indoor unit has been set and turned on, the operating mode of VIP indoor unit will be regarded as the priority operating mode of the system. If the VIP indoor unit has not been set or not turned on, the mode adopted by most indoor units at the same time will be the priority operating mode of the system.
In response to heating mode only	Indoor units with the heating mode will operate normally, while indoor units in the cooling or fan mode will display the "dd".
In response to cooling mode only	Indoor units in the cooling and fan modes will operate normally, while indoor units in the heating mode will display the "dd".
Heating priority mode	Indoor units in the cooling or fan mode will stop running, while indoor units in the heating mode will run as usual.
First on priority mode	The operating mode of the first running Indoor unit will be regarded as the priority operating mode of the system.

5.2.3 Heating operation

It may take longer to reach the set temperature for general heating operation than for cooling operation.

The following operation is performed in order to prevent the heating capacity from dropping or cold air from blowing

Defrost Operation

In the heating operation, as the outdoor temperature decreases, frost may be formed on the heat exchanger in the outdoor unit, making it more difficult for the heat exchanger to heat up the air. The heating capacity decreases, and a defrosting operation needs to be performed on the system in order for the system to provide sufficient heat to the indoor unit. At this point, the indoor unit will show “dF” on the display screen.

The indoor fan motor will automatically stop running so as to prevent cold air from coming out of the indoor unit when the heating operation starts. This process will take some time. This is not a malfunction.

INFORMATION

- In heating mode, the air-conditioning system absorbs heat from the outdoor air and releases heat to the indoor side. When the outdoor temperature is low, less heat is released. This is the principle of heat pump.
- When the outdoor temperature is extremely low, the heating capacity of the air conditioner decreases, and other heating equipment may need to be added.

5.2.4 Operate the System

Press the operation mode selector button on the user interface and select the operation mode.

Press the ON/OFF button on the user interface.

Result: The running light turns on and the system starts to run.

Stop

Press the ON/OFF button on the user interface.
Result: The running light is off, and the system stops running.

NOTE

Once the unit has stopped running, do not disconnect the power immediately. Wait for at least 10 minutes.

Adjust

Refer to the user manual for the controller on how to set the required temperature, fan speed and air flow direction.

5.3 Dry Program

5.3.1 System operations

The function in this program uses the minimum temperature drop (minimum indoor cooling) to bring about a drop in humidity in the room.

The temperature and fan speed cannot be set.

6 MAINTENANCE AND SERVICE

NOTE

- Never inspect or service the unit by yourself. Ask a qualified service person to perform this work.

⚠ WARNING

- Never replace a fuse with a fuse of a wrong ampere ratings or other wires when a fuse blows out. Use of wire or copper wire may cause the unit to break down or cause a fire.

⚠ CAUTION

- Do not insert fingers, rods or other objects into the air inlet or outlet. Do not remove the fan guard. When the fan is rotating at high speed, it will cause injury.
- After a long use, check the unit stand and fitting for damage. If damaged, the unit may fall and result in injury.

⚠ WARNING

- When the fuse melts, do not use any unspecified fuse or other wire to replace the original fuse. The use of electrical wires or copper wires may cause the unit to malfunction or cause a fire.
- Do not insert fingers, sticks, or other items into the air inlet or outlet. Do not remove the fan mesh cover. When the fan rotates at a high speed, it may cause bodily injury.
- It is very dangerous to check the unit when the fan is rotating.
- Make sure you turn off the main power switch before any maintenance work begins.
- Do check the supporting and base structure of the unit for any damages after a long period of use. The unit may drop and cause personal injury if there is any damage.

6.1 About the Refrigerant

This product contains fluorinated greenhouse gases as stipulated in the Kyoto Protocol. Do not discharge the gas into the atmosphere.

Refrigerant Type: R410A

GWP Value: 2088

Based on the applicable law, the refrigerant must be checked regularly for leakages. Please contact the installation personnel for more information.

⚠ WARNING

- The refrigerant in the air conditioner is safe, and usually does not leak.
- If the refrigerant leaks, and comes in contact with burning objects in the room, it will produce harmful gases. Shut down any flammable heating device, ventilate the room and contact the dealer immediately.
- Do not use the air conditioner again until the maintenance personnel has confirmed that the refrigerant leakage has been sufficiently resolved.

6.2 After-sales Service and Warranty

6.2.1 Warranty period

This product contains the warranty card that was completed by the dealer during installation. The customer must check the completed warranty card and keep it properly.

This product contains the warranty card that was completed by the dealer during installation. The customer must check the completed warranty card and keep it properly.

If you need to repair the air conditioner during the warranty period, please contact the dealer and provide the warranty card.

6.2.2 Recommended maintenance and inspection

As the use of the unit for many years will eventually lead to a dust layer, the performance of the unit will degenerate to a certain extent.

As professional skills are needed to dismantle and clean the unit, and for the optimal maintenance effects of this unit, please contact your dealer for more details.

When you request the dealer for assistance, please remember to state:

- Complete model name of the air conditioner.
- Date of installation.
- Details on the fault symptoms or errors, and any defects.

NOTE

The warranty does not cover the damage caused by dismantling or cleaning of the internal components by unauthorized dealers.

6.3 Maintenance Before Long Shutdown

For example, at the end of winter and summer.

- Run the indoor unit in the fan mode for about half a day to dry the internal parts of the unit.
- Turn off the power supply.
- Clean the air filter and external shell of the unit. Please contact the installation or maintenance personnel to clean the air filter and external shell of the indoor unit. The installation/operation manual of the specialized indoor unit includes maintenance tips and cleaning procedures. Make sure that the clean air filter is installed in its original position.

6.4 Maintenance After Long Shutdown

For example, in early summer or winter.

- Check and remove all objects that may clog the air inlets and outlets of the indoor and outdoor units.
- Clean the air filter and external shell of the unit. Please contact the installation or maintenance personnel. The installation/operation manual of the indoor unit includes maintenance tips and cleaning procedures. Make sure that the clean air filter is installed in its original position.
- Turn on the main power supply 12 hours before this unit is operated in order to ensure that the unit runs smoothly. The user interface is displayed once the power is turned on.

⚠ WARNING

- Do not attempt to modify, dismantle, remove, reinstall or repair this unit, as the improper dismantling or installation may result in electric shock or fire. Please contact the dealer.
- If the refrigerant accidentally leaks, make sure that there is no fire around the unit. The refrigerant itself is completely safe, non-toxic and non-flammable, but it will produce toxic gases when it accidentally leaks and comes in contact with flammable substances generated by existing heaters, and burning devices in the room. You must get a qualified maintenance personnel to verify that the point of leakage has been repaired or rectified before you restore the operations of the unit.

7 TROUBLESHOOTING

⚠ WARNING

- When any unusual situations arises (burning odour, etc.), stop the unit immediately and turn off the power.
- As a result of a certain situation, the unit has caused damage, an electric shock, or a fire. Please contact the dealer.

The system maintenance must be carried out by a qualified maintenance personnel:

Table 7.1

Symptom	Measures
If a safety device, such as a fuse, circuit breaker or a leakage circuit breaker is triggered frequently or the ON/OFF switch is not working properly.	Turn off the main power switch.
The operating switch is not functioning normally.	Turn off the power supply.
The operating indicator is flickering, and an error code is shown on the screen as well.	Notify the installation personnel and report the error code.

Other than the above-mentioned situations, and where the fault is not obvious, if the system continues to malfunction, carry out the following steps to investigate.

Table 7.2

Symptom	Measures
The system does not run at all.	Check if there is a power failure. Wait for the power supply to be restored. If a power failure occurs when the unit is still running, the system will restart automatically once the power is restored. Check if the fuse is broken or if the circuit breaker is working. If necessary, replace the fuse or reset the circuit breaker.
The system works fine in the fan-only operating mode but stop running once it enters the heating or cooling operation modes.	Check if the air inlets or outlets of the outdoor or indoor units are blocked by any obstacles. Remove the obstacles, and maintain good ventilation in the room.
The system is running but there is insufficient cooling or heating.	Check if the air inlets or outlets of the outdoor or indoor units are blocked by any obstacles. Remove the obstacles, and maintain good ventilation in the room. Check if the filter is blocked (please refer to the "Maintenance" section in the manual of the indoor unit). Check the temperature settings. Check the fan speed settings on the user interface. Check if the doors and windows are open. Close the doors and windows to shut out wind from the external environment. Check if there are too many people in the room when the cooling mode is in operation. Check if the heat source of the room is too high. Check if there is direct sunlight into the room. Use curtains or blinds. Check if the air flow angle is proper.

7.1 Error Codes: Overview

In case of a displayed check code, perform correcting actions as explained in the table.

⚠ CAUTION

All the correcting actions must be executed by professional personnel.

Table 7.3 Error code

Error code	Description	Manual restart
E2	Indoor units and outdoor unit communication failure	YES
E4	T3 or T4 temperature sensor malfunction (open/short circuit)	YES
E5	Input voltage protection	YES
E.9.	Compressor parameter mismatch	NO
EF	PFC failure	NO
EH	Temperature sensor failure of refrigerant heat pipe	YES
F1	DC bus voltage (PN voltage) continuously below 200VDC for 5 seconds after power-on	YES
H0	Communication failure between the main control and motor drive module	YES
HF	Wrong type of indoor units are connected in the system	YES
H7	Number of indoor units detected by outdoor unit is increased or decreased compared to the setting number	YES
PL	High temperature protection of radiator surface	YES
P1	High voltage protection of the system	YES
P2	Low voltage protection of the system	YES
P3	Overcurrent protection	YES
P4	T5 compressor discharge high temperature protection	YES
P5	T3 outdoor condenser temperature high temperature protection	YES
PF	Outdoor unit locking	YES
PE	T2 indoor unit heat exchanger temperature protection	YES

Table 7.5 Compressor drive error code

Check code	Description	Manual reset
L11/-0	Instantaneous overcurrent protection for compressor phase current	YES
L12/-0	Compressor phase current continuous overcurrent protection for 30 seconds	YES
L13/-0	Compressor weak magnetic current overload protection	YES
L2E/-0	Compressor inverter module over temperature protection	YES
L3E/-0	Compressor bus voltage too low protection	YES
L31/-0	Compressor bus voltage too high protection	YES
L43/-0	Compressor current sampling bias abnormality	YES
L44/-0	Compressor PFC current sampling bias abnormality	YES
L46/-0	Compressor IPM protection	YES
L5E/-0	Compressor startup failure	YES
L51/-0	Compressor motor stepping fault	YES
L52/-0	Compressor lock protection	YES
L6E/-0	Compressor motor phase loss protection	YES
LC1/-0	Compressor PFC software instantaneous overcurrent	YES
LC5/-0	Compressor PFC effective value overcurrent	YES
LC6/-0	Compressor PFC1 channel hardware overcurrent	YES
LC7/-0	Compressor PFC1 channel hardware overcurrent	YES
LC8/-0	Compressor PFC3 channel hardware overcurrent	YES

NOTE

The compressor drive fault code consists of the fault type "Lxx" and the compressor number "-0". When the compressor drive fault occurs, "Lxx" and "-0" will flash alternatingly on the main board LED digital display.

If there are 3 occurrences of "L1X", "L2X", or "L4X" faults within 1 hour, the fault becomes unrecoverable, the main board LED digital display will show the last fault code, and the power must be reset manually.

Table 7.6 Fan motor check code

Error code	Description	Manual reset
J11/-X	Fan motor current instantaneous overcurrent protection	YES
J12/-X	Fan motor current continuous overcurrent protection for 30 seconds	YES
J13/-X	Fan motor magnetic current overload protection	YES
J2E/-X	Fan inverter module over temperature protection	YES
J3E/-X	Fan motor bus voltage too low protection	YES
J31/-X	Fan motor bus voltage too high protection	YES
J43/-X	Fan motor current sampling bias abnormality	YES
J44/-X	Fan motor PFC current sampling bias abnormality	YES
J46/-X	Fan motor IPM protection (FO)	YES
J5E/-X	Fan motor startup failure	YES
J51/-X	Fan motor stepping fault	YES
J52/-X	Fan motor lock protection	YES
J6E/-X	Fan motor phase loss protection	YES

NOTE

The fan motor drive fault code consists of the fault type "Jxx" and the fan number "-0". When the fan motor drive fault occurs, "Jxx" and "-X" will flash alternatingly on the main board LED digital display.

If there are 10 occurrences of faults within 2 hours, the fault becomes unrecoverable, the main board LED digital display will show the last fault code, and the power must be reset manually.

7.2 Symptom: Non Air Conditioning Malfunctions

The following fault symptoms are not caused by the air conditioning:

7.2.1 Symptom: System cannot run

Air conditioner does not start immediately after pressing the switch button on the controller. If the operating indicator lights up, the system is working normally. In order to prevent overloading of the compressor, the compressor will start after 3-5 minutes. The same start-up delay occurs after the mode selector is pressed.

7.2.2 Symptom: Fan speed is not consistent with the setting

Even if the fan speed regulation button is pressed, the fan speed does not change. During heating, when the indoor temperature reaches the set temperature, the outdoor unit will shut down, and the indoor unit switches to the quiet fan speed mode. This is to prevent cold air from blowing directly at the room user. The fan speed will not change even when another indoor unit is in heating operation, if the button is pressed.

7.2.3 Symptom: Fan direction is not consistent with the setting

The air direction is not consistent with the user interface display. The air direction does not swing. This is because the unit is controlled by the centralized controller.

7.2.4 Symptom: A unit is emitting white smoke (indoor unit)

When humidity is high during cooling mode, white mist may appear due to the humidity and the temperature difference between the air inlet and outlet.

When the air conditioner is switched to heating mode after defrosting, the IDU discharges the moisture generated from defrosting as steam.

7.2.5 Symptom: A unit is emitting white smoke (indoor unit, outdoor unit)

After the defrosting operation, switch the system to the heating mode. The moisture produced by the defrosting operation will become steam to be discharged out of the system.

7.2.6 Symptom: The air conditioner is producing noise (indoor unit)

A continuous low "hissing" sound is heard when the system is in "Auto", "Cool", "Dry", and "Heat" modes. This is the sound of refrigerant gas flowing through both indoor and outdoor

A "hissing" sound is heard at the start or immediately after stopping operation or defrost operation. This is the noise of refrigerant caused by flow change.

A "zeen" sound is heard immediately after the power supply is turned on. The electronic expansion valve inside an indoor unit starts working and makes the noise. it will reduce in about one minute.

A continuous low "shah" sound is heard when the system is in cooling mode, dry mode or at a stop. When the drain pump (optional accessories) is in operation, this noise is heard.

A "pishi-pishi" squeaking sound is heard when the system stops after heating operation.

Expansion and contraction of plastic parts caused by temperature change make this noise.

A low "sah", "choro-choro" sound is heard while the indoor unit is stopped. When another indoor unit is in operation, this noise is heard. In order to prevent oil and refrigerant from remaining in the system, a small amount of refrigerant is kept flowing.

7.2.7 Symptom: Noise from air conditioner (indoor unit, outdoor unit)

A soft, continuous hissing sound can be heard when the system is in cooling or defrosting operation. This is the sound of the refrigerant gas flowing in the indoor and outdoor units.

A hissing sound is heard the moment the system starts or stops operation or after the defrosting operation has been completed. This is the noise produced when the refrigerant flow is stopped or changed.

7.2.8 Symptom: Noise from air conditioner (outdoor unit)

When the tone of the operating noise changes. This noise is caused by frequency changes.

7.2.9 Symptom: The IDU blows dust

When filter is very dirty, dust may enter the indoor unit and be blown out.

7.2.10 Symptom: The IDU emits odor

The IDU absorbs the odors of rooms, furniture or cigarettes, etc., and disperses the odors during operation.

It is advised to have the air conditioner cleaned and maintained regularly by professional technicians.

7.2.11 Symptom: ODU fan does not run

In the course of operation. Control speed of fan motor to optimize the product operations.

7.2.12 Symptom: Hot air is felt when the indoor unit stops

Several indoor units operating in the same system. When another unit is running, part of the refrigerant will still flow through this unit.

8 RELOCATION

Please contact the dealer to dismantle and reinstall all the units. You need specialized skills and technology to move the units.

9 DISPOSAL

This unit uses hydrogen fluorocarbons. Please contact the dealer when you want to dispose this unit. Based on the requirements of the law, the collection, transportation and disposal of refrigerants must be in accordance with the regulations governing the collection and destruction of hydrofluorocarbons.

INSTALLATION

1 OVERVIEW

1.1 Safety Instructions For Installer

1.1.1 Overview

⚠ WARNING

- Make sure the installation, testing and materials used comply with the applicable law.
- Plastic bags should be disposed of properly. Avoid contact by children. Potential risk: Asphyxia.
- Do not touch the refrigerant piping, water piping or internal parts during operations, and when the operation has just been completed. This is because the temperature may be too high or too low. Let them recover to the normal temperature first. Wear protective gloves if you must come in contact with these.
- Do not touch any refrigerant that has accidentally leaked.

⚠ CAUTION

- Please wear the appropriate personal protective tools during installation, maintenance or repair of the system (protective gloves, safety glasses, etc.).
- Do not touch the air inlet or aluminum fin of the unit.

NOTE

- Improper installation or connection of equipment and accessories may cause electric shocks, short circuits, leaks, fires, or other damage to the equipment. Use only accessories, equipment and spare parts made or approved by manufacturer.
- Take appropriate measures to prevent small animals from entering the unit. Contact between small animals and electrical components may cause system malfunction, leading to smoke or fire.
- Do not place any object or equipment on top of the unit.
- Do not sit, climb, or stand on the unit.
- Operation of this equipment in a residential environment could cause radio interference.

1.1.2 Refrigerant

⚠ WARNING

- During the test, do not exert a force greater than the maximum allowed pressure on the product (as shown on the nameplate).

⚠ WARNING

- Take appropriate precautions to prevent refrigerant leakage. If the refrigerant gas leaks, ventilate the area immediately. Possible risk: An excessively high concentration of refrigerant in an enclosed area can lead to anoxia (oxygen deficiency). The refrigerant gas may produce a toxic gas if it comes in contact with fire.
- Refrigerant must be recovered. Do not release it to the environment. Use the vacuum pump to draw the refrigerant out from the unit.

NOTE

- Make sure the refrigerant piping is installed in accordance with the applicable law. In Europe, EN378 is the applicable standard.
- Make sure the piping and connections are not placed under pressure.
- After all the piping connections have been completed, check to make sure there is no gas leak. Use nitrogen to conduct the leak check for gas.
- Do not charge refrigerant before the wiring layout is completed.
- Only charge the refrigerant after the leak tests and vacuum drying have been completed.
- Do not charge more than the specified amount of refrigerant. This is to prevent the compressor from malfunctioning.
- The refrigerant type is clearly marked on the nameplate.
- The unit is charged with refrigerant when it is shipped from the factory. But depending on the piping dimensions and length, the system require additional refrigerant.
- Only use tools specific to the type of system refrigerant to make sure the system can withstand the pressure, and prevent foreign objects from entering the system.

1.1.3 Electricity

⚠ WARNING

- Make sure you switch off the power of the unit before you open the electric control box, and access any circuit wiring or components inside. At the same time, this prevents the unit from being accidentally powered up during installation or maintenance work.
- Once you open the cover of the electric control box, do not let any liquid spill into the box, and do not touch the components in the box with wet hands.
- Cut off power supply more than 10 minutes prior to access the electrical parts. Measure the voltage of the main circuit capacitor or electrical component terminals to make sure the voltage is less than 36 V before you touch any circuit component. Refer to the connections and wiring on the nameplate for the master circuit terminals and connections.
- The installation must be completed by professionals, and must comply with local laws and regulations.
- Make sure the unit is earthed, and the earthing must conform to the local law.
- Use only copper core wires for installation.
- Wiring must be carried out in accordance with what is stated in the nameplate.
- The unit does not include a safety switch device. Make sure a safety switch device that can completely disconnect all polarities is included in the installation, and that the safety device can be completely disconnected when there is excessive voltage (such as during a lightning strike).
- Make sure the wiring ends are not subjected to any external force. Do not pull or squeeze the cables and wires. At the same time, make sure the wiring ends are not in contact with the piping or sharp edges of the sheet metal.
- Do not connect the earth wire to public pipes, telephone earth wires, surge absorbers and other places that are not designed for earthing. A gentle reminder that improper earthing may cause electric shock.
- Use a dedicated power supply cord for the unit. Do not share the same power source with other equipment.
- A fuse or circuit breaker must be installed, and these must conform to the local law.
- Make sure an electric leakage protection device is installed to prevent electric shocks or fire. The model specifications and characteristics (anti high-frequency noise characteristics) of the electric leakage protection device are compatible with the unit to prevent frequent tripping.
- Make sure a lightning rod is installed if the unit is placed on the roof or other places that can be easily struck by lightning.

⚠ WARNING

- Make sure all terminals of the components are firmly connected before you close the cover of the electric control box. Before you power on and start the unit, check that the cover of the electric control box is tight and secured properly with screws.

  Do not let any liquid spill into the electric control box.
- The appliance shall be installed in accordance with national wiring regulations.
- If the supply cord is damaged, it must be replaced by the manufacturer or its service dealer or a similarly qualified person in order to avoid a hazard.
- An all-pole disconnection switch having a contact separation of at least 3mm in all poles should be connected in fixed wiring.
- The dimensions of the space necessary for correct installation of the appliance including the minimum permissible distances to adjacent structures.
- The temperature of refrigerant circuit will be high, please keep the interconnection cable away from the copper tube.

CAUTION

- Do not install the power cord near equipment that is susceptible to electromagnetic interference, such as TV, and radios to prevent interference.
- Use a dedicated power supply cord for the unit. Do not share the same power source with other equipment. A fuse or circuit breaker must be installed, and these must conform to the local law.

ⓘ INFORMATION

The installation manual is only a general guide on the wiring and connections, and is not specifically designed to contain all information regarding this unit.

1.2 Notice

⚠ WARNING

To prevent electric shock or fire:

- Do not wash the electric box of the unit.
- Do not operate the unit with wet hands.
- Do not place any items that contain water on the unit.

⚠ CAUTION

- Do not sit, climb, or stand on the unit.

2 PACKING BOX

2.1 Overview

This chapter mainly introduces the subsequent operations after the outdoor unit has been delivered to site and unpacked.
This specifically includes the following information:

- Unbox and handling the outdoor unit.
- Take out the accessories of the outdoor unit.
- Dismantle the transport rack.

Remember the following:

- At the time of delivery, check the unit for any damage. Report any damage immediately to the carrier's claim dealer.
- As far as possible, transport the packaged unit to its final installation site to prevent damage during the handling process.
- Take note of the following items when transporting the unit:

  Fragile. Handle with care.

  Keep the unit with its front facing upwards so as not to damage the compressor.
- Select the unit transportation path in advance.

2.2 Transport

Lifting method

NOTE

- Do not remove any packaging during lifting. Where the unit is not packed or the package is damaged, use a gasket or package to protect the unit.
- Use a leather belt that can adequately support the weight of the unit, and has a width ≥20 mm.
- Images are for reference only. Please refer to the actual product.
- The belt must have enough strength to bear the weight of the unit; keep the machine balanced and ensure the unit is lifted safely and stably.

- Packaged

Please lift in packaged or protected condition, and do not remove any packaging before lifting.

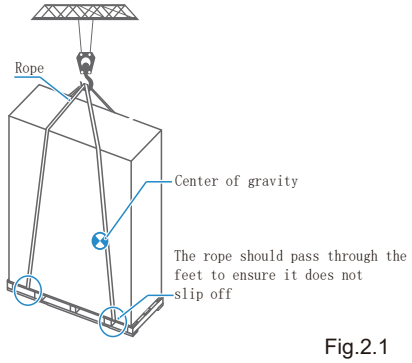

Fig.2.1

- **Unpacked**

It should be protected by sub-plate showing as Fig.2.2, when the package is damaged.

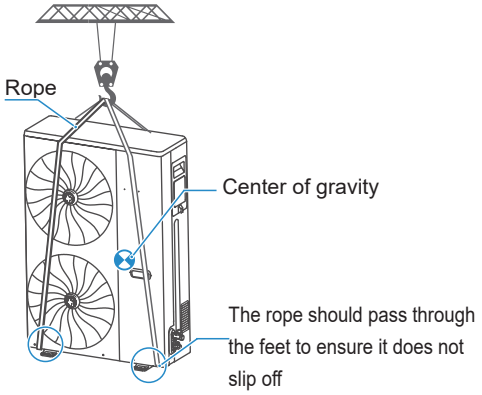

Fig.2.2

Center of gravity position is shown in the following figure 2.3:

Table 2.1 Unit: mm

Model	A	B	C
20kW	650	500	150

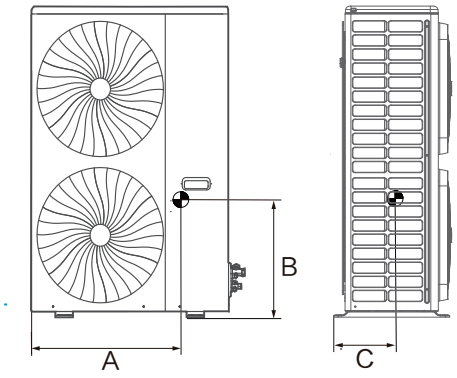

Fig.2.3

- **Forklift method**

To move the unit with a forklift, insert the forks into the opening at the bottom of the unit, as shown in Figure 2.4.

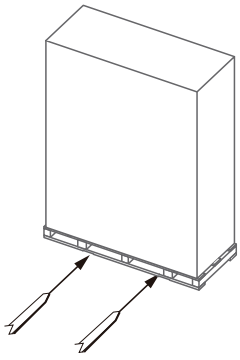

Fig.2.4

2.3 Unpack The Outdoor Unit

Take the unit out from the packing materials:

- Be careful not to damage the unit when you use a cutting tool to remove the wrapping film.
- Remove the six nuts on the wooden back stand.

⚠ WARNING

Plastic film should be disposed of properly. Avoid contact by children. Potential risk: Asphyxia.

2.4 Taking Out Accessories Of Outdoor Unit

- The accessories for the unit are stored in two plastic bags. One of the bags stored documents like the manual and the other bag stored the accessories like the pipes. All of them are located inside the unit, near the compressor. The accessories in the unit are as follows:

Table 2.2 Accessories

Name	Qty.	Outline	Function
Owner's and installation manual	1		——
Water outlet pipe	1	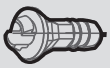	To drainage
Matching resistor	1		To improve communication stability
Magnet ring	1		/
Cable Tie	2		To bind magnet ring

2.5 Layout

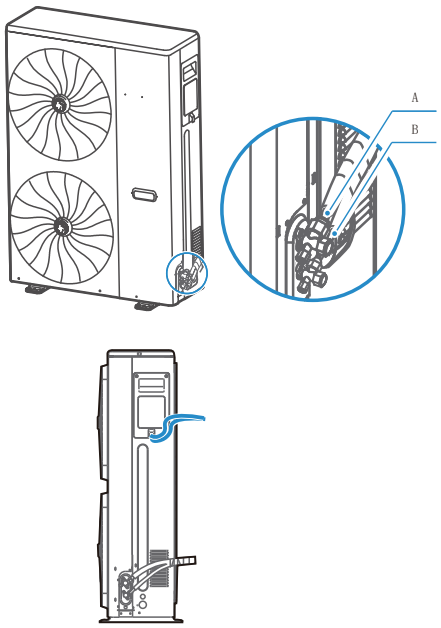

Fig.2.5

Table 2.3 Unit: mm

No.	Name	Function	Size
A	Gas pipe connection port	To connect gas pipes	-
B	Liquid pipe connection port	To connect liquid pipes	-

Table 2.4 Unit: mm

Size / Model	ΦA(OD) (Liquid side)	ΦB(OD) (Gas side)
20kW	Φ19.1	Φ9.52

3 OUTDOOR UNIT COMBINATION

3.1 Overview

This chapter contains the following information:

- List of branch joint fittings.
- Recommended combination for outdoor unit.

3.2 Branch Joints

On the choice of branch joints, refer to table 3.1.

Table 3.1 For combinable series

Outdoor unit capacity	Size of main pipe when the sum of equivalent lengths of liquid and gas side piping is under 90m			Size of main pipe when the sum of equivalent lengths of liquid and gas side piping is over 90mm		
	gas(mm)	liquid(mm)	Indoor first branch	gas(mm)	liquid(mm)	Indoor first branch
A ＜ 160	Φ15.9	Φ9.52	FQZHN-01D	Φ19.1	Φ9.52	FQZHN-01D
160 ≤ A ＜ 230	Φ19.1	Φ9.52	FQZHN-01D	Φ22.2	Φ9.52	FQZHN-02D
230 ≤ A ＜ 330	Φ22.2	Φ9.52	FQZHN-02D	Φ25.4	Φ9.52	FQZHN-02D

3.3 Recommended Outdoor Unit Combination

⚠ CAUTION

- The total capacity of IDU shall be between 60%–130% of the combined capacity of ODU.
- When all indoor units are running at the same time, the total capacity of the indoor units should be less than or equal to the combined capacity of the outdoor unit to prevent overloading in bad working conditions or narrow operating space.
- The total capacity of the indoor units can be up to a maximum of 130% of the combined capacity of the outdoor unit for a system when not all the indoor units are operating at the same time.
- If the system is applied in a cold region (ambient temperature is -10°C or below) or a very hot, heavy loading environment, the total capacity of the indoor units should be less than the combined capacity of the outdoor unit.

Table 3.2 Maximum number of indoor units

Model	Max Qty. of indoor units
20kW	12

4 PREPARATIONS BEFORE INSTALLATION

4.1 Overview

This chapter mainly describes the precautions and things to note before the unit is installed at the site.

This mainly includes the following information:

- Choose and Prepare the Installation Site.
- Select and Prepare the Refrigerant Piping.
- Select and Prepare the Electrical Wiring.

4.2 Choosing And Preparing The Installation Site

4.2.1 Site requirements

- Provide sufficient space around the unit for maintenance and air circulation.
- Make sure the installation site can bear the weight of the unit and vibrations.
- Make sure the area is well ventilated.
- Make sure the unit is stable and level.
- Choose a place where the rain can be avoided as much as possible.
- The unit should be installed in a location where the noise generated by the unit will not cause any inconveniences to any person.
- Choose a site that will comply with the applicable law.

Do not install the unit in the following locations:

- An environment where there is a potential risk of explosions.
- Where there are equipment emitting electromagnetic waves. Electromagnetic waves may disrupt the control system, and cause the unit to malfunction.
- Where there are existing fire hazards like leakage of flammable gases, carbon fibers, and combustible dust (such as diluents or gasoline).
- Where corrosive gases (such as sulphurous gases) are produced. Corrosion of copper pipes or welded parts may lead to refrigerant leakage.
- Where mineral oil mist, spray, or steam may exist in the atmosphere. Plastic parts may age, fall off or cause water leakage.
- Where there is a high salt content in the air such as places near the sea.

⚠ CAUTION

- Electric appliances that should not be used by the general public must be installed in the safety area to prevent others from getting close to these electric appliances.
- Both indoor and outdoor units are suitable for the installation of commercial and light industrial environment.
- An excessively high concentration of refrigerant in an enclosed area can lead to anoxia (oxygen deficiency).

NOTE

- This is a class A product. This product may cause radio interference in the home environment. The user may need to take the necessary measures if such a situation does arise.
- The unit described in this manual may cause electronic noise generated by radio frequency energy. The unit conforms to the design specifications and provides reasonable protection to prevent such interference. However, there is no guarantee that there will be no interference during a specific installation process.
- Therefore, it is suggested that you install the units and wires at an appropriate distance from devices like sound equipment and personal computers.

- Do take into considerations adverse environmental conditions such as strong winds, typhoons or earthquakes as an improper installation may cause the unit to overturn.
- Take precautions to make sure the water will not damage the installation space and environment in the event of a water leakage.
- If the unit is installed in a small room, refer to section 4.2.3 “Caution for refigerant leaks” to make sure the refrigerant concentration does not exceed the permissible safety limit when there is a refrigerant leak.
- Make sure the air inlet of the unit is not directed at the main wind direction. Incoming wind will disrupt the operations of the unit. If necessary, use a deflector as an air baffle.
- Add water drain piping on the base so that the condensed water will not damage the unit, and prevent the accumulation of water to form pits when the works are in progress.

4.2.2 Site requirements for installation of outdoor unit in cold regions

NOTE

- Snow protection facilities must be installed in areas with snowfall. Refer to the following figure, (malfunctions are more common when there is insufficient snow protection facilities). In order to protect the unit from accumulated snow, increase the height of the rack, and install a snow shield at the air inlets and outlets.
- Do not obstruct the air flow of the unit when you install the snow shield.

Make note of the following when installing the unit in areas affected by cold weather or snow:

- Avoid direct wind blowing to the air outlet or air inlet

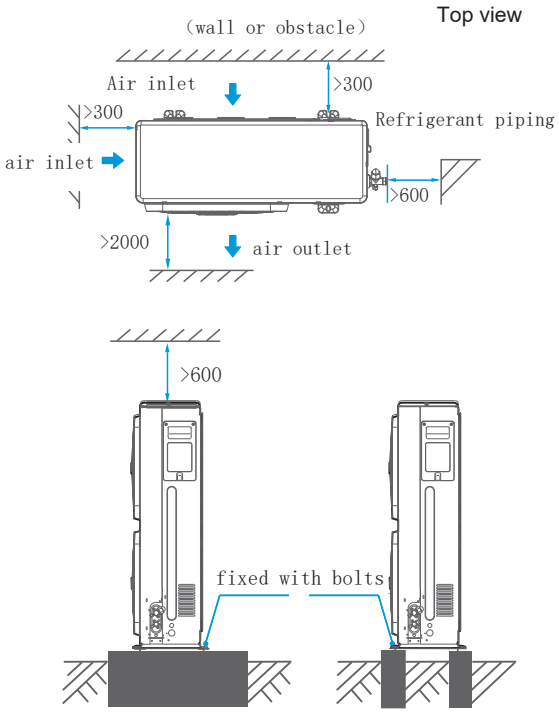

Fig.4.1

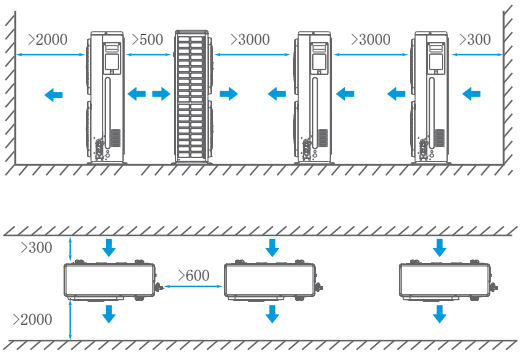

Fig.4.2

4.2.3 Caution for refrigerant leaks

Safety measures
The installation personnel must make sure the safety measures to prevent leaks comply with local regulations or standards. If the local regulations do not apply, the following criteria can be applied.
The system uses R410A as the refrigerant. R410A itself is a completely non-toxic, and non-combustible refrigerant. However, do ensure that the air conditioning unit is installed in a room with sufficient space. This is so that when there is a serious leak in the system, the maximum concentration of the refrigerant gas in the room will not exceed the stipulated concentration, and is consistent with the relevant local regulations and standards.

About the maximum concentration level
The calculation for the maximum concentration of the refrigerant is directly related to the occupied space that the refrigerant may leak to and the charging amount of the refrigerant.
The measurement unit for concentration is kg/m3 (weight of gaseous refrigerant that has a volume of 1 m3 in the occupied space).
The highest level of permissible concentration must comply with the relevant local regulations and standards.
Based on the applicable European standards, the maximum permissible concentration level of R410A in the space occupied by humans is limited to 0.44 kg/m^3. If this limit is exceeded, necessary measures shall be taken. Please confirm as follows:

a. Calculate the total refrigerant charging amount. Total refrigerant charging amount = refrigerant charging amount of the unit itself + charging amount calculated according to the pipe length.
b. Calculate the indoor volume (based on the minimum volume).
c. Calculated refrigerant concentration = (total charging amount / indoor volume).

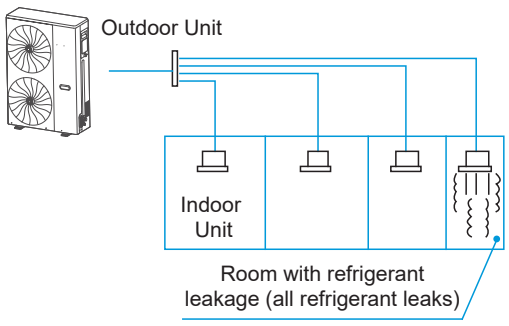

Fig. 4.3

Countermeasures when exceeding the limit concentration
a. Please install a mechanical ventilation device.
b. If it is impossible to change air frequently, please install a leak detection alarm device connected with the mechanical ventilation device.

4.3 Selecting And Preparing The Refrigerant Piping

4.3.1 Refrigerant piping requirements

NOTE

The R410A refrigerant pipeline system must be kept strictly clean, dry and sealed.

- Cleaning and drying: prevent foreign objects (including mineral oil or water) from mixing into the system.
- Seal: R410A does not contain fluorine, does not destroy the ozone layer, and does not deplete the ozone layer that protect the earth from harmful ultraviolet radiation. But if it is released, R410A can also cause a slight greenhouse effect. Therefore, you must pay special attention when you check the sealing quality of the installation.
- The piping and other pressure vessels must comply with the applicable laws and suitable for use with the refrigerant. Use only phosphoric acid deoxidized seamless copper for the refrigerant piping.
- Foreign objects in the pipes (including lubricant used during pipe bending) must be ≤ 30 mg/10m.
- Calculate all piping lengths.

4.3.2 Allowable length and height difference for refrigerant piping

Refer to the following table and figure (for reference only) to determine the appropriate size.

NOTE

- The equivalent length of each elbow and U-shape branch joint is 0.5m, the equivalent length of each branch header is 1m.
- As much as possible, install the indoor units such that they are equidistant on both sides of the U-shape branch joint.
- The allowable length of the farthest indoor unit to the first branch joint in the system should be equal to or less than 40m unless specified conditions are met, in which case the permitted length is up to 90m. Please refer to requirement 2.
- Special-purpose branch joints from dealer for all branch joints should be used. Failing to do so may lead to severe system malfunction.

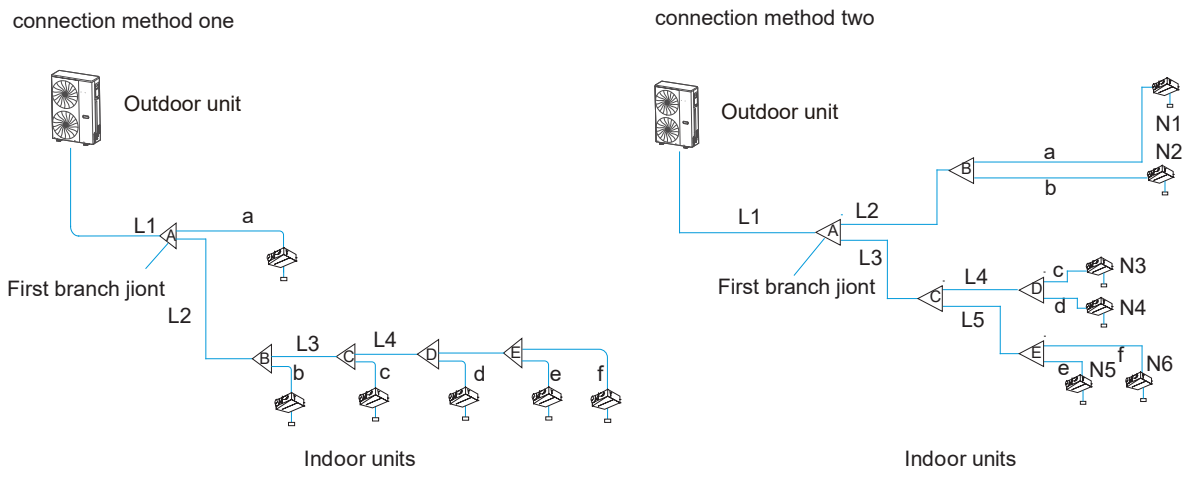

Fig. 4.4

Table 4.1 Pipe and Component Names

Name	Designation
Indoor unit main pipe	L2 to L5
Indoor unit branch joint	A to E
Indoor unit auxiliary connection pipe	a to f
Main pipe	L1

Table 4.2 Summary of permitted refrigerant piping lengths and level differences

Category			Permitted values	Piping
Piping lengths	Total piping length		≤200m	L1+L2+L3+L4+L5+a+b+c+d+e+f
	Equivalent length between the farthest indoor unit and the outdoor unit	Actual length	≤80m	L1+L2+L3+L4+L5+f (connection method one)orL1+L3+L5+f (connection method two)
		Equivalent length	≤90m	
	Piping between farthest indoor unit and first indoor branch joint		≤20m	L2+L3+L4+L5+f (connection method one)or L3+L5+f (connection method two)
Level differences	Largest level difference between indoor unit and outdoor unit	Outdoor unit is above	≤30m	-
		Outdoor unit is below	≤20m	-
	Largest level difference between indoor unit		≤8m	-

The applicable piping length and level difference requirements are summarized in Table 4.2 and are fully described as follows.

1. **Requirement 1:** The piping length between the farthest indoor unit (N6) and the first outdoor branch joint (M) should not exceed 80m (actual length) and 90m (equivalent length). (The equivalent length of each branch joint is 0.5m, and the equivalent length of each branch header is 1m.)

2. **Requirement 2:** The piping length between the farthest indoor unit (N6) and the first indoor branch joint (A) should not exceed 20m in (Σ{L2 to L5} +f≤20m or Σ{L3 to L5} + f≤20m) unless the following conditions are met and the following measures are taken, in which case the permitted length is up to 20m.

Conditions:

a) The length of each indoor auxiliary pipe (from each indoor unit to its nearest branch joint) joint should not exceed 20m (each from a to f ≤ 20m).

b) The length difference between {the piping from the first indoor branch joint (A) to the farthest indoor unit (N6)} and {the piping from the first indoor branch joint (A) to the nearest indoor unit (N1) } should not exceed 20m.

4.3.3 Piping diameter

1) Select the diameter of the main piping

- The main pipe (L1) and first indoor branch joint (A) should be sized according to the Table 4.3 and Table 4.4.

Table 4.3

Outdoor unit capacity	Size of main pipe when the sum of equivalent lengths of liquid and gas side piping is under 90m			Size of main pipe when the sum of equivalent lengths of liquid and gas side piping is over 90m		
	gas(mm)	liquid(mm)	Indoor first branch	gas(mm)	liquid(mm)	Indoor first branch
A<160	Φ15.9	Φ9.52	FQZHN-01D	Φ19.1	Φ9.52	FQZHN-01D
160≤A<230	Φ19.1	Φ9.52	FQZHN-01D	Φ22.2	Φ9.52	FQZHN-02D
230≤A<330	Φ22.2	Φ9.52	FQZHN-02D	Φ25.4	Φ9.52	FQZHN-02D

2) Select the branch joint diameters for the indoor unit

Based on the total capacity of the indoor unit, select the branch joint for the indoor unit from the following table.

Table 4.4

Total capacity of indoor units A (×100W)	Gas side (mm)	Liquid side (mm)	Branch joint
A<166	Φ15.9	Φ9.52	FQZHN-01D
166≤A<230	Φ19.1	Φ9.52	FQZHN-01D
230≤A<330	Φ22.2	Φ9.52	FQZHN-02D

If the size of the branch joint pipe selected according to the above table is larger than that of the main pipe according to Table 4.5 or 4.6, the size of the branch joint pipe should be reduced to make it the same as the main pipe.

The pipe thickness of the refrigerant piping shall comply with the applicable legislation.
The minimal pipe thickness for R410A piping must be in accordance with the table below.

Table 4.5

Piping outer diameter (mm)	Minimum thickness (mm)	Temper grade
Φ6.35	0.80	M-type
Φ9.52	0.80	
Φ12.7	1.00	
Φ15.9	1.00	
Φ19.1	1.00	

Material: Only seamless phosphorus-deoxidized copper piping that complies with all applicable legislation should be used.
Thicknesses: Temper grades and minimum thicknesses for different diameters of piping should comply with local regulations.
Design pressure of R410 refrigerant is 4.2MPa (42bar).

If the required pipe size is not available, you can use other diameters by considering the following factors:

- In case the standard size is not available in local market, one size up of gas pipe, and one size down of liquid pipe should be used.
- In some conditions, the pipe size needs to be one size up than the standard size that is the “Size up Size” (for example: when the equivalent length between the farthest indoor unit and the first outdoor unit is larger than 90m, the pipe size needs to be one size up; when the piping length from the farthest indoor unit to the first indoor unit is more than 40m, the indoor main pipe size needs to be one size up to allow the piping length up to 90m). In case the “Size up Size” is not available in the local market, the standard size pipe must be used.
- Pipe sizes bigger than corresponding “Size up Size” cannot be used under any circumstances.
- Calculation for the additional refrigerant must be adjusted according to section 5.9 on the determination of the additional refrigerant volume.

3) Indoor unit auxiliary connection pipe

Table 4.6

Indoor unit capacity A (×100W)	Gas side (mm)	Liquid side (mm)
A≤45	Φ12.7	Φ6.35
A≥56	Φ15.9	Φ9.52

⚠ CAUTION

- If the indoor unit capacity exceeds the range in the table above, select the pipe diameter according to the manual of the indoor unit.
- The size of indoor side branch pipe shall not be larger than that of main pipe(L1). If the size of main pipe selected according to the above table is larger than that of main pipe, the size of branch pipe shall be reduced to make it the same as that of main pipe.

4) An Example of Refrigerant Piping Selection

The example below illustrates the piping selection procedure for a system consisting of one outdoor unit (20KW) and 6 indoor units. The system's equivalent length between the farthest indoor unit and the outdoor unit is in excess of 90m; the piping between the farthest indoor unit and the first indoor branch joint is less than 40m in length; and each indoor auxiliary pipe (from each indoor unit to its nearest branch joint) is less than 10m in length.

outdoor unit(for example， Assuming that the sum of the equivalent lengths of the gas side and liquid side piping in the illustrated piping system is greater than 90m)

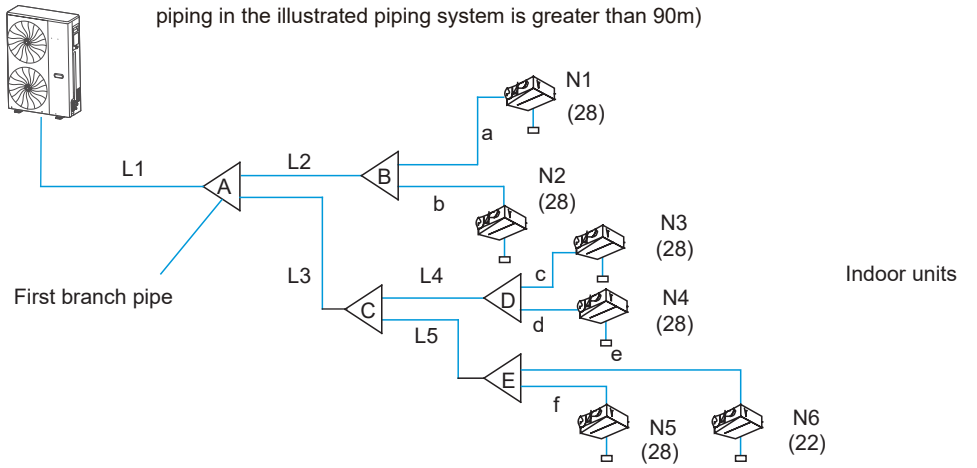

Fig. 4.5

1. Indoor unit branch pipe

- The inner control pipe has a to f sections. For the size selection of the control pipe, please refer to Table 4.4 in this manual.

  Note: The maximum length of the control pipe should not exceed 15m.

2. Indoor unit main piping and indoor unit manifold components

- The downstream indoor units of the main piping L2 include N1 and N2, with a total capacity of 28 × 2=56. The size of piping L2 is Φ 15.9/ Φ 9.52. Select FQZHN-01D for branch pipe B.
- The downstream indoor units of the main piping L4 include N3 and N4, with a total capacity of 28 × 2=56. The size of piping L4 is Φ 15.9/ Φ 9.52. Select FQZHN-01D for branch pipe D.
- The downstream indoor units of the main piping L5 include N5 and N6, with a total capacity of 28+22=50. The size of piping L5 is Φ 15.9/ Φ 9.52. Select FQZHN-01D for branch pipe E.
- The downstream indoor units of the main piping L3 include N3 to N6, with a total capacity of 28 × 3+22=106, . The size of piping L3 is Φ 15.9/ Φ 9.52. Select FQZHN-01D for branch pipe C.
- The downstream indoor units of branch pipe A include N1 to N6, with a total capacity of 28 × 5+22=162. FQZHN-01D is selected as the branch pipe. Since the sum of the equivalent length of the liquid and gas pipes is equal to or greater than 90m, the first branch pipe adopts FQZHN-02D based on Table 4.3 and the principle of taking the maximum value, FQZHN-02D is used.

3. Main pipe

- (Please refer to Table 4.3 and Table 4.4 in this manual.)

4.4 Selecting And Preparing the Electrical Wiring

4.4.1 Safety device requirements

1. Select the wire diameters (minimum value) individually for each unit based on the table 4.7 and table 4.8， where the rated current in table 4.7 means MCA in table 4.8. In case the MCA exceeds 40A, the wire diameters should be selected according to the national wiring regulation.
2. Maximum allowable voltage range variation between phases is 2%.
3. Select circuit breaker that having a contact separation in all poles not less than 3 mm providing full disconnection, where MFA is used to select the current circuit breakers and residual current operation breakers:

Table 4.7

Rated current of appliance (A)	Nominal cross-sectional area (mm^2)	
	Flexible cords	Cable for fixed wiring
≤ 3	0.5 and 0.75	1 to 2.5
> 3 and ≤ 6	0.75 and 1	1 to 2.5
> 6 and ≤ 10	1 and 1.5	1 to 2.5
> 10 and ≤ 16	1.5 and 2.5	1.5 to 4
> 16 and ≤ 25	2.5 and 4	2.5 to 6
> 25 and ≤ 32	4 and 6	4 to 10
> 32 and ≤ 50	6 and 10	6 to 16
> 50 and ≤ 63	10 and 16	10 to 25

Table 4.8

System	Outdoor Unit				Power Current			Compressor		Fan Motor	
	Voltage (V)	Frequency (Hz)	Min. (V)	Max. (V)	MCA (A)	TOCA (A)	MFA (A)	MSC (A)	RLA (A)	Output Power (kW)	FLA (A)
20kW	220-240	50	198	264	33	33	40	-	30.5	0.1+0.1	0.71+0.71

INFORMATION

Phase and frequency of power supply system: 50Hz, Voltage: 220-240V

Abbreviations:
MCA: Minimum Circuit Amps; TOCA: Total Over-current Amps; MFA: Maximum Fuse Amps; MSC: Maximum Starting Current (A); RLA: Rated Load Amps; FLA: Fan Load Amps.

- Units are suitable for use on electrical systems where voltage supplied to unit terminals is not below or above listed range limits. Maximum allowable voltage variation between phases is 2%.
- Select wire size based on the value of MCA.
- TOCA indicates the total overcurrent amps value of each OC set.
- MFA is used to select overcurrent circuit breakers and residual-current circuit breakers.
- MSC indicates the maximum current on compressor start-up in amps.
- RLA is based on the following conditions: indoor temperature 27°C DB, 19°C WB; outdoor temperature 35°C DB.

5 OUTDOOR UNIT INSTALLATION

5.1 Overview

This chapter includes the following information:

- Open the unit
- Outdoor unit installation
- Welding refrigerant piping
- Refrigerant piping check
- Refrigerant charging
- Electrical Wiring

5.2 Opening The Unit

5.2.1 Opening the outdoor unit

- Removal of all screws on the right front side plate;Put the left hand into the handle position to prevent the right front side plate from falling, and prepare for pulling out;
- Press the right hand on the corner of the right front side plate and pull it down, and pull the left hand outward at the same time;
- After the top rib comes out of the top cover, take out the right front side plate.

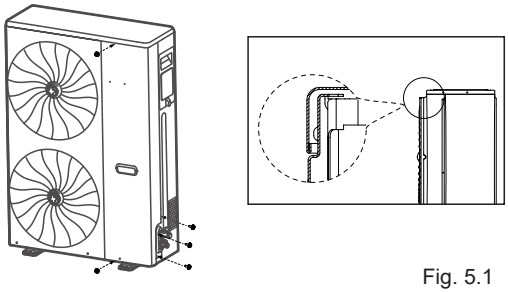

Fig. 5.1

5.3 Mounting The Outdoor Unit

5.3.1 Preparing the structure for installation

- The base of the outdoor unit must use the solid concrete surface as the cement base or the steel beam frame base.
- The base must be completely level to ensure that every point of contact is even.
- During installation, make sure the base supports the vertical folds of the front and back under plates of the chassis directly as the vertical folds of the front and back under plates are unit where the actual support for the unit load is.
- No gravel layer is required when the base is built on the roof surface, but the sand and cement on the concrete surface must be level, and the base should be chamfered along the edge.
- A water drainage ditch should be set around the base to drain the water around the equipment. Potential risk: slip.
- Check the load-bearing capacity of the roof to make sure it can support the load.
- When you choose to install the piping from the bottom, the base height should be above 200mm.
- Make sure the base where the unit is installed is strong enough to prevent vibrations and noise.

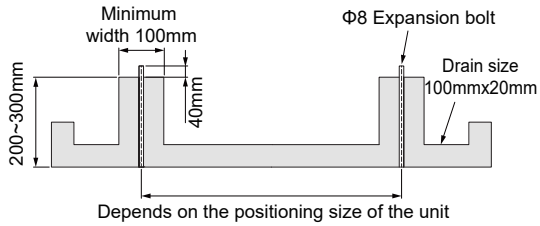

Fig 5.2

Use six bolts (M8) to secure the unit in place. Best is to screw in the ground bolt until it is embedded in the base surface by at least 3 threads.The purpose of using plastic washers is to prevent rusting.

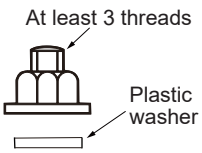

Fig 5.3

Please refer to the figure below for the installation position of bolts.

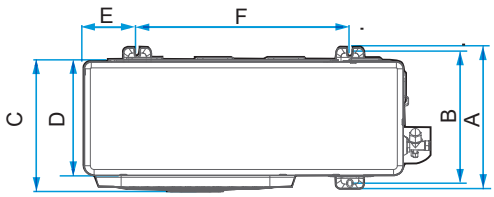

Fig 5.4

Table 5.1

Unit: mm

Size / Model	A	B	C	D	E	F
20kW	400	362	368	320	150	600

5.3.2 Outdoor unit installation space

Make sure there is sufficient space around the unit for maintenance work, and the minimum space for air inlet and air outlet is reserved (see below to select a feasible method).

NOTE

- In all installation examples in this chapter, the direction of connecting pipe for outdoor unit installation is forward or downward.
- When the rear pipe is connected and installed, the installation space on the right side of the outdoor unit shall be at least 250mm;
- When two or more outdoor units are installed side by side, the distance between two adjacent outdoor units must be greater than 200mm;
- For the installation space of the unit, the maintenance space and smooth ventilation of the unit shall be considered, and an installation method shall be selected according to the actual situation.

There are obstacles on the air inlet side but no obstacles on the air outlet side.

- No obstacles above the outdoor unit：

Unit:mm

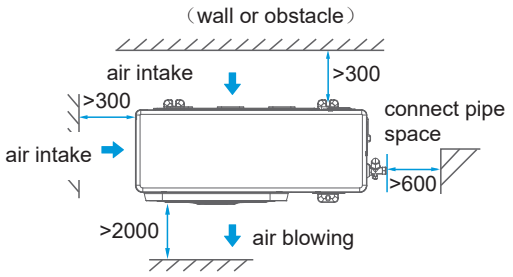

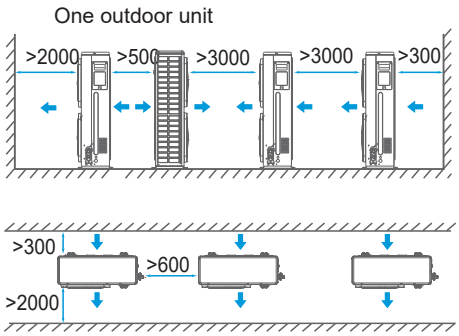

More than one outdoor unit

Fig. 5.5

- There are obstacles above the outdoor unit：

Unit:mm

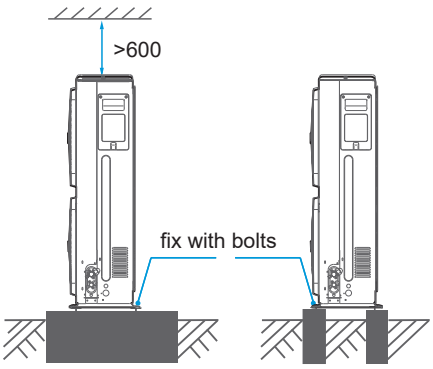

Fig. 5.6

NOTE

- When the outdoor unit is installed in the space with three ring walls or walls above at the same time, the length of the left and right walls of the machine shall not exceed 1000mm, otherwise the flexible air duct shall be added to guide the air.

5.4 Pipe Welding

5.4.1 Things to note when connecting the refrigerant piping

Make sure the refrigerant piping is installed in accordance with the applicable law.

Make sure the piping and connections are not placed under pressure.

5.4.2 Connect refrigerant piping

⚠ CAUTION

- Clean and new pipes shall be used for refrigerant piping, water and foreign matters shall not enter the pipe during construction; If water and foreign matters enter, be sure to flush the pipeline with nitrogen.
- Be careful when the pipeline passes through the wall. Please cover both ends of the pipeline with adhesive tape or rubber plug to prevent foreign matters.
- The pipe connection shall follow the following principles: the shorter the connected pipe, the smaller the height difference between indoor and outdoor units, the less the pipe bending angle, and the larger the bending radius as much as possible.
- When laying according to the predetermined route, the pipe shall not be flattened. The bending radius of the bending part must be greater than 200mm. The connecting pipe cannot be stretched or bent frequently. One pipe cannot be bent at the same place for more than 3 times at most.

Before the refrigerant piping is connected, make sure the indoor units and outdoor units are installed properly. Connecting refrigerant piping include:

- Connect refrigerant piping to outdoor unit
- Connect refrigerant piping to indoor unit (refer to the installation manual of the indoor unit)
- Connecting branch joints .

⚠ CAUTION

- Remove the valve cover and make sure that the stop valve is fully closed.
- Connect a vacuum gauge to the needle valve port and make sure there is no residual pressure in the tube.
- Use pliers and other tools to completely cut off the small sealing tube. .
- Remove the large sealing tube.

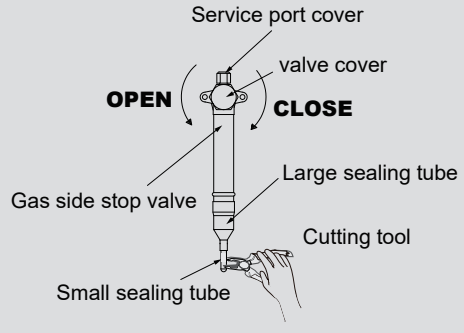

5.4.3 Outdoor refrigerant connecting pipe position

The outdoor refrigerant connecting pipe position is shown in the following figure.

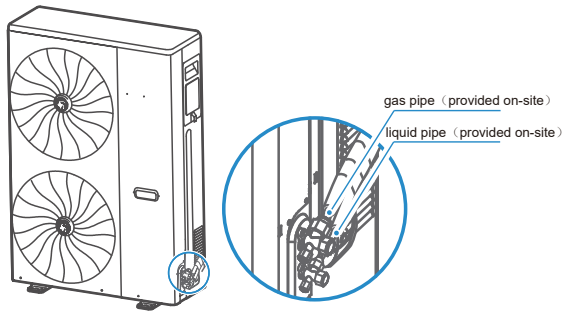

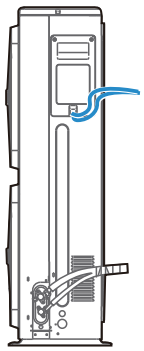

Fig. 5.7

5.4.4 Connecting refrigerant piping to outdoor unit

NOTE

- Be sure that the field installed piping does not touch other pipes, the bottom panel or side panel.
- Be sure to protect the piping with suitable insulation for the bottom and side connection, to prevent it from coming into contact with the casing.

Installing connecting pipes

Refrigerant piping

Flaring

To cut the piping with a cutting knife, rotate the cutting knife repeatedly.

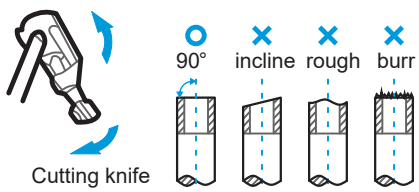

Fig. 5.8

Insert the pipe into the connecting nut flare.

Table 5.2

OD（mm）	A（mm）	
	maximum	minimum
Φ6.35	8.7	8.3
Φ9.52	12.4	12.0
Φ12.7	15.8	15.4
Φ15.9	19.0	18.6
Φ19.1	23.3	22.9

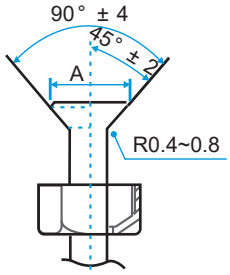

Fig. 5.9

Tightening nut

Align the connecting pipe, tighten the connecting nuts with your hand, and then tighten them with a wrench as shown in Figure 5.10.

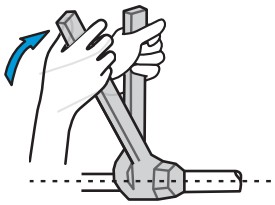

Fig. 5.10

NOTE

- When welding refrigerant piping, in order to prevent internal oxidation of the piping, nitrogen filling operation must be adopted, otherwise the oxidation chips will block the refrigeration circulation system.
- According to the installation conditions, excessive torque can damage the horn mouth, while insufficient torque can cause air leakage. Please refer to the table below to determine the tightening torque.

Table 5.3

piping size	Tightening torque N.m
Φ6.35	14.2～17.2 N.m (144～176 kgf.cm)
Φ9.52	32.7～39.9 N.m (333～407 kgf.cm)
Φ12.7	49.5～60.3 N.m (504～616 kgf.cm)
Φ15.9	61.8～75.4 N.m (630～770 kgf.cm)
Φ19.1	97.2～118.6 N.m (990～1210 kgf.cm)

5.4.5 Connecting Branches

⚠ CAUTION

- The wrong installation will cause the unit to malfunction.

5.4.5.1 U-type branch joint

The branch joints should be as level as possible, and the angular error does not exceed 10°.

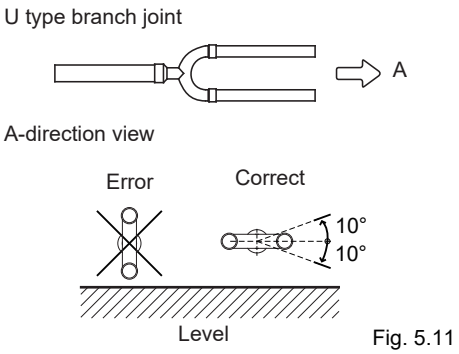

Fig. 5.11

The branch joints come in different pipe diameters, which can be easily matched with different pipe diameters. When connecting pipes, select the pipe section with the appropriate pipe diameter, cut it in the middle with a pipe cutter and remove burrs, as shown in the figure below.

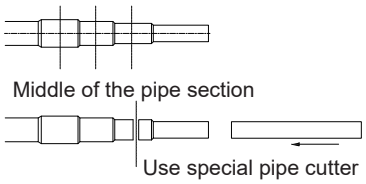

Fig. 5.12

The length of the straight pipe section between the continuous branch pipes shall be no less than 500mm. The straight pipe section behind the branch pipe end shall be no less than 500mm. The length of straight pipe between two right angle bends shall be no less than 500mm.

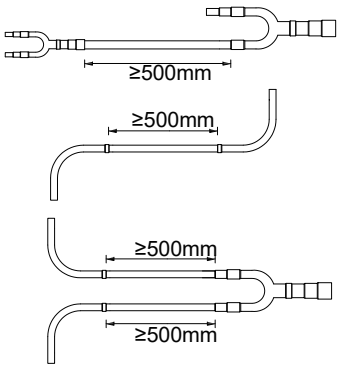

Fig. 5.13

5.4.6 Brazing

⚠ CAUTION

- During the test, do not exert a force greater than the maximum allowed pressure on the product (as shown on the nameplate).
- During brazing, use nitrogen as protection to prevent the formation of a large amount of oxide film in the pipes. This oxide film will have adverse effects on the valves and compressors in the cooling system, and may hamper normal operations.
- Use the pressure reducing valve to set the nitrogen pressure to 0.02~0.03 MPa (a pressure that can be felt by the skin).

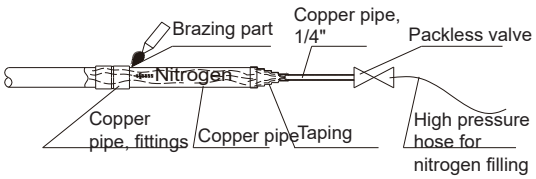

Fig. 5.14

- Do not use antioxidants when brazing the pipe joints.
- Use copper-phosphorus alloys (BCuP) when brazing copper and copper, and no flux is required. When brazing copper and other alloy, flux is required.
  Flux produces an extremely harmful effect on the refrigerant piping system. For example, using a chlorine-based flux is used may corrode the pipes, and when the flux contains fluorine, it will degrade the frozen oil.

5.4.7 About stop valves

Stop valves

- The following figure shows the names of all parts required for the installation of the stop valves.
- Stop valves are closed when unit is shipped from the factory.

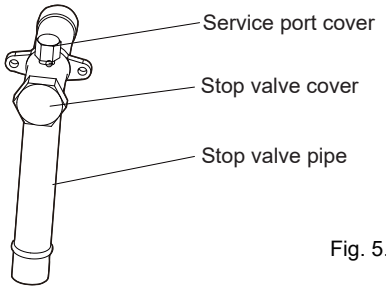

Fig. 5.15

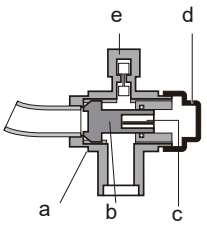

a Sealing component
b Axis
c Hexagonal hole
d Stop valve cover
e service port

Fig. 5.16

Using of stop valve

1. Remove the stop valve cover.

2. Insert the hex wrench into the stop valve, and rotate the stop valve counter-clockwise.

3. Stop turning when the stop valve cannot be rotated further.

Result: Valve is now open.

The fastening torque of the stop value is shown in table 5-5. Insufficient torque may cause the refrigerant to leak.

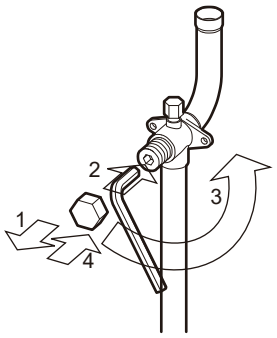

Fig. 5.17

Closing the stop valve

1. Remove the stop valve cover.

2. Insert the hex wrench into the stop valve, and rotate the stop valve clockwise.

3. Stop turning when the stop valve cannot be rotated further.

Result: Valve is now closed.

Direction to close:

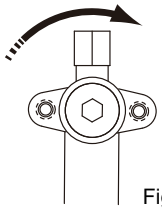

Fig. 5.18

Fastening torque Table 5.4

Stop valve size (mm)	Tightening torque / N.m (turn clockwise to close)
	Axis
	Valve body
Φ12.7	9~30
Φ15.9	12~30
Φ19.1	
Φ22.2	16~30
Φ25.4	24~30
Φ28.6	
Φ31.8	25~35
Φ35.0	

5.5 Flushing Pipes

To remove dust, other particles and moisture, which could cause compressor malfunction if not flushed out before the system is run, the refrigerant piping should be flushed using nitrogen. Pipe flushing should be performed once the piping connections have been completed with the exception of the final connections to the indoor units. That is, flushing should be performed once the outdoor units have been connected but before the indoor units are connected.

⚠ CAUTION

Only use nitrogen for flushing. Using carbon dioxide risks leaving condensation in the piping. Oxygen, air, refrigerant, flammable gases and toxic gases must not be used for flushing. Use of such gases may result in fire or explosion.

The liquid and gas sides must be flushed simultaneously.

The flushing procedure is as follows:

1.Cover the inlets and outlets of the indoor units to prevent dirt getting blown in during pipe flushing. (Pipe flushing should be carried out before connecting the indoor units to the piping system.)

2.Attach a pressure reducing valve to a nitrogen cylinder.

3.Connect the pressure reducing valve outlet to the inlet on the liquid (or gas) side of the outdoor unit.

4.Use blind plugs to block all liquid (gas) side openings, except for the opening at the indoor unit which is furthest from the outdoor units (“Indoor unit A” in Fig.5.38).

5.Start to open the nitrogen cylinder valve and gradually increase the pressure to 0.5MPa.

6.Allow time for nitrogen to flow as far as the opening at indoor unit A.

7.Flush the first opening:

a)Using suitable material, such as a bag or cloth, press firmly against the opening at indoor unit A.

b)When the pressure becomes too high to block with your hand, suddenly remove your hand allowing gas to rush out.

c)Repeatedly flush in this manner until no further dirt or moisture is emitted from the piping. Use a clean cloth to check for dirt or moisture being emitted. Seal the opening once it has been flushed.

8.Flush the other openings in the same manner, working in sequence from indoor unit A towards the outdoor units. Refer to Fig.5.39

9.Once flushing is complete, seal all openings to prevent dust and moisture from entering.

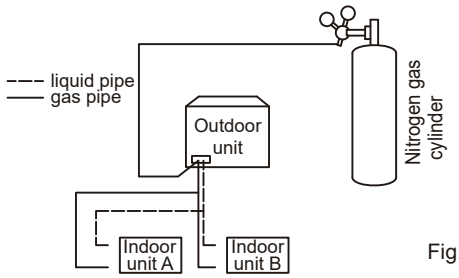

Fig.5.19

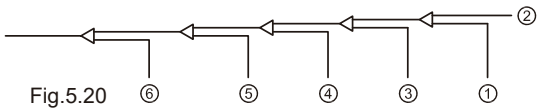

Fig.5.20

5.6 Gas Tightness Test

To prevent faults caused by refrigerant leakage, a gas tightness test should be performed before system commissioning.

NOTE

- Only dry nitrogen should be used for gas tightness testing. Oxygen, air, flammable gases and toxic gases must not be used for gas tightness testing. Use of such gases may result in fire or explosion.
- Make sure that all the outdoor unit stop valves are firmly closed.
- Make sure all piping connections are complete before the tightness test begins.

The gas tightness test procedure is as follows:

1.Charge the indoor piping with nitrogen at 0.3MPa through the needle valves on the liquid and gas stop valves and leave for at least 3 minutes (do not open the liquid or gas stop valves). Observe the pressure gauge to check for large leakages. If there is a large leakage, the pressure gauge will drop quickly.

2.If there are no large leakages, charge the piping with nitrogen at 1.5MPa and leave for at least 3 minutes. Observe the pressure gauge to check for small leakages. If there is a small leakage, the pressure gauge will drop distinctly.

3.If there are no small leakages, charge the piping with nitrogen at 4.2 MPa and leave for at least 24 hours to check for micro leakages. Micro leakages are difficult to detect. To check for micro leakages, allow for any change in ambient temperature over the test period by adjusting the reference pressure by 0.01MPa per 1°C of temperature difference. Adjusted reference pressure = Pressure at pressurization + (temperature at observation – temperature at pressurization) x 0.01MPa. Compare the observed pressure with the adjusted reference pressure. If they are the same, the piping has passed the gas tightness test. If the observed pressure is lower than the adjusted reference pressure, the piping has a micro leakage.

4.If the leakage is detected, refer to following part “Leak detection”. Once the leak has been found and fixed, the gas tightness test should be repeated.

5.If not continuing straight to vacuum drying once the gas tightness test is complete, reduce the system pressure to 0.5-0.8MPa and leave the system pressurized until ready to carry out the vacuum drying procedure.

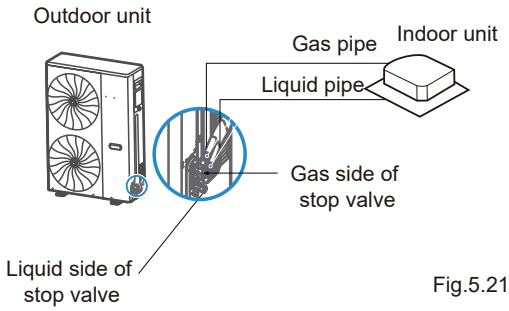

Fig.5.21

Leak detection

The general methods for identifying the source of a leak are as follows:

1. Audio detection: relatively large leaks are audible.

2. Touch detection: place your hand at joints to feel for escaping gas.

3. Soapy water detection: small leaks can be detected by the formation of bubbles when soapy water is applied to a joint.

5.7 Vacuum Drying

Vacuum drying should be performed in order to remove moisture and non-condensable gases from the system. Removing moisture prevents ice formation and oxidization of copper piping or other internal components. The presence of ice particles in the system would cause abnormal operation, whilst particles of oxidized copper can cause compressor damage. The presence of non-condensable gases in the system would lead to pressure fluctuations and poor heat exchange performance.

Vacuum drying also provides additional leak detection (in addition to the gas tightness test).

⚠ CAUTION

- Before performing vacuum drying, make sure that all the outdoor unit stop valves are firmly closed.
- Once the vacuum drying is complete and the vacuum pump is stopped, the low pressure in the piping could suck vacuum pump lubricant into the air conditioning system. The same could happen if the vacuum pump stops unexpectedly during the vacuum drying procedure. Mixing of pump lubricant with compressor oil could cause compressor malfunction. Therefore a check valve should be used to prevent vacuum pump lubricant seeping into the piping system.

During vacuum drying, a vacuum pump is used to lower the pressure in the piping to the extent that any moisture present evaporates. At 5mm Hg (755mm Hg below typical atmospheric pressure) the boiling point of water is0°C. Therefore a vacuum pump capable of maintaining a pressure of -756 mm Hg or lower should be used. Using a vacuum pump with a discharge in excess of 4 L/s and a precision level of 0.02mm Hg is recommended. Thevacuum drying procedure is as follows:

1. Connect the vacuum pump through a manifold with a pressure gauge to the service port of all stop valves.

2. Start the vacuum pump and then open the manifold valves to start vacuuming the system.

3. Continue vacuum drying for at least 2 hours and until a pressure difference of -0.1 MPa or more has been achieved. Once the pressure difference of at least -0.1 MPa has been achieved, continue vacuum drying for 2 hours. Close the manifold valves and then stop the vacuum pump. After 1 hour, check the pressure gauge. If the pressure in the piping has not increased, the procedure is finished. If the pressure has increased, repeat the steps 1 to 3 until all moisture has been remove.

4. After vacuum drying, keep the manifold connected to the master unit stop valves, in preparation for refrigerant charging.

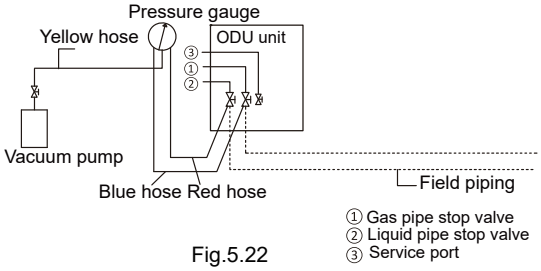

Fig.5.22

5.8 Piping Insulation

After the leak test and the vacuum drying are completed, the pipe must be insulated. Considerations:

- Make sure the refrigerant piping and branch joints are completely insulated.
- Make sure the liquid and gas pipes (for all units) are insulated.
- Use heat-resistant polyethylene foam for the liquid pipes (able to withstand temperature of 70°C), and polyethylene foam for the gas pipes (able to withstand temperature of 120°C).
- Reinforce the insulation layer of the refrigerant piping based on the installation environment.

5.8.1 Selection of insulation material thickness

Condensed water may form on the surface of the insulation layer.

Table 5.5

Piping size	Humidity<80%RH Thickness	Humidity≥80%RH Thickness
Φ6.35~38.1 mm	≥ 15 mm	≥ 20 mm
Φ41.3~54.0 mm	≥ 20 mm	≥ 25 mm

5.8.2 Pipe wrapping

To avoid condensation and water leakage, the connecting pipe must be wrapped with tape to ensure isolation from the air.

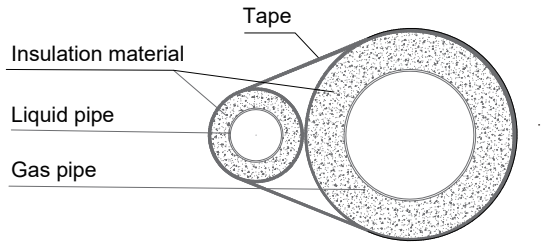

Fig.5.23

When wrapping insulation tape, each circle should press half of the previous circle of tape. Do not wrap the tape too tightly to avoid reducing the thermal insulation effect.

After completing the pipe insulation work, seal the holes in the wall with sealing material.

5.8.3 Protective measures of the pipeline

The refrigerant pipe will swing, expand or shrink during operations. If the pipe is not fixed, the load will be concentrated in a certain part, which may cause the deformation or rupture of the refrigerant pipe.

The suspended connecting pipes shall be well supported, and the distance between supports shall not exceed 1m.

The outdoor pipes shall be protected against accidental damage. If the length of the pipe exceeds 1m, a gusset plate must be added for protection.

5.9 Refrigerant Charging

⚠ WARNING

- Use only R410A as the refrigerant. Other substances may cause explosions and accidents.
- R410A contains fluorinated greenhouse gases, and the GWP value is 2088. Do not discharge the gas into the atmosphere.
- When charging the refrigerant, make sure you wear protective gloves and safety glasses. Be careful when you open the refrigerant piping.

NOTE

- If the power supply of some units is off, the charging program cannot be completed normally.
- If this is a multi-unit outdoor system, the power supply for all outdoor units should be turned on.
- Make sure the power supply is turned on 12 hours before operations so that the crankcase heater is properly energized. This is also to protect the compressor.
- Make sure all connected indoor units have been identified.
- Charge the refrigerant only after vacuum drying.
- Volume of refrigerant charged must not exceed the designed amount.

Calculating additional refrigerant charge

The additional refrigerant charge required depends on the lengths and diameters of the outdoor and indoor liquid pipes. Table below shows the additional refrigerant charge required per meter of equivalent pipe length for different diameters of pipe. The total additional refrigerant charge is obtained by summing the additional charge requirements for each of the outdoor and indoor liquid pipes, as in the following formula, where T1 to T8 represent the equivalent lengths of the pipes of different diameters. Assume 0.5m for the equivalent pipe length of each branch joint.

Table 5.6

Liquid piping Diameter (mm OD)	Additional refrigerant charge per meter of equivalent length of liquid piping (kg)
Φ6.35	0.022
Φ9.52	0.054
Φ12.7	0.110
Φ15.9	0.170

Additional refrigerant charge R (kg) = (T1@Φ6.35) × 0.022 + (T2@Φ9.52) × 0.057 + (T3@Φ12.7) × 0.110 + (T4@Φ 15.9) × 0.170

When the number of indoor units is ≥ 10, an additional 0.025kg of refrigerant is required for each indoor unit.

For example, when paired with 12 internal units, an additional 12 * 0.025=0.3kg of refrigerant is required.

NOTE

- Strictly follow the preconditions shown in the above refrigerant charging amount calculation method, and determine that the additional amount shall not exceed the maximum refrigerant additional amount shown in the table below. If the calculated value of additional refrigerant exceeds the limits shown in the table below, the total length of the pipeline construction scheme shall be shortened and the refrigerant charging amount shall be recalculated to meet the requirements shown in the table below.
- The maximum refrigerant addition shown in the table below is based on the recommended combination.

Table 5.7

Model	Maximum refrigerant addition (kg)
20kW	9.6

The procedure for adding refrigerant is as follows:

1. Calculate additional refrigerant charge R (kg).
2. Place a tank of R410A refrigerant on a weighing scale. Turn the tank upside down to ensure refrigerant is charged in a liquid state. (R410A is a blend of two different chemicals compounds. Charging gaseous R410A into the system could mean that the refrigerant charged is not of the correct composition).
3. After vacuum drying, the blue and red pressure gauge hoses should still be connected to the pressure gauge and to the master unit stop valves.
4. Connect the yellow hose from the pressure gauge to the R410A refrigerant tank.
5. Open the valve where the yellow hose meets the pressure gauge, and open the refrigerant tank slightly to let the refrigerant eliminate the air. Caution: open the tank slowly to avoid freezing your hand.
6. Set the weighing scale to zero.
7. Open the three valves on the pressure gauge to begin charging refrigerant.
8. When the amount charged reaches R (kg), close the three valves. If the amount charged has not reached R (kg) but no additional refrigerant can be charged, close the three valves on the pressure gauge, run the outdoor units in cooling mode, and then open the yellow and blue valves. Continue charging until the full R (kg) of refrigerant has been charged, then close the yellow and blue valves. Note: Before running the system, be sure to complete all the pre-commissioning checks and be sure to open all stop valves as running the system with the stop valves closed would damage the compressor.

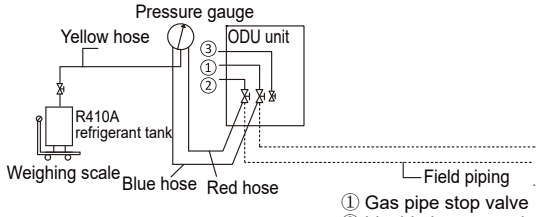

Fig 5.24

5.10 Electrical Wiring

5.10.1 Electrical wiring precautions

⚠ WARNING

- Take note of the risk of electric shocks during installation.
- All the electric wires and components must be installed by an installation personnel with the proper electrician certification, and the installation process must comply with the applicable regulations.
- Use only wires with copper cores for the connections.
- A main switch or safety device that can disconnect all polarities must be installed, and the switching device can be completely disconnected when the corresponding excessive voltage situation arises.
- Wiring must be carried out in strict accordance with what is stated in the product nameplate.

⚠ WARNING

- Do not squeeze or pull the unit connection, and make sure the wiring is not in contact with the sharp edges of the sheet metal.
- Make sure the earthing connection is safe and reliable. Do not connect the earth wire to public pipes, telephone earth wires, surge absorbers and other places that are not designed for earthing. Improper earthing may cause electric shock.
- Make sure the fuses and circuit breakers installed meet the corresponding specifications.
- Make sure an electric leakage protection device is installed to prevent electric shocks or fires.
- The model specifications and characteristics (anti high-frequency noise characteristics) of the electric leakage protection device are compatible with the unit to prevent frequent tripping.
- Before power on, make sure the connections between the power cord and terminals of the components are secure, and the metallic cover of the electric control box is closed tightly.

⚠ CAUTION

- If the power supply lacks N phase or there is an error in the N phase, the device will malfunction.
- Some power equipment may have reverse-phase phase or intermittent phase (such as a generator). For this type of power sources, a reverse-phase protection circuit should be installed locally in the unit, as operating in the inverted phase may damage the unit.
- Do not share the same power supply line with other devices.
- The power cord may produce electromagnetic interference so you should maintain a certain distance from equipment that may be susceptible to such interference.
- Separate power supply for the indoor and outdoor units.
- For systems with multiple units, make sure a different address is set for each outdoor unit.

5.10.2 Layout

Wiring layout comprises of the power cords and communication wiring between the indoor and outdoor units. These include the earth wires, and the shielded layer of the earth wires of the indoor units in the communication wiring. See below the wiring layout of outdoor unit.

⚠ WARNING

- If you want to remove the electric control box as a whole, you need to release the refrigerant in the system first, weld and disconnect the connecting pipe of the refrigerant radiator at the right rear of the electric control box, and remove all cables connected between the electric control box and the air conditioner at the same time.

5.10.3 Wiring layout

The wiring layout comprises the power cords and communication wiring between the indoor and outdoor units. These include the earth wires, and the shielded layer of the earth wires of the communication wiring. See below the wiring layout of outdoor unit.

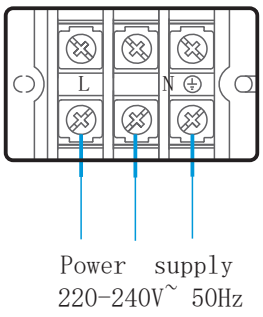

Fig. 5.25

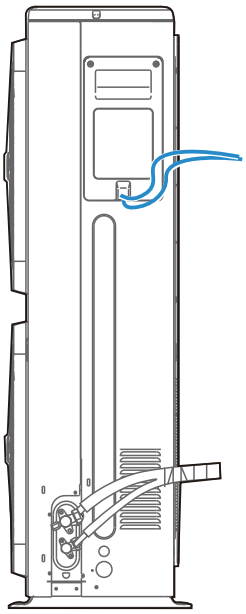

Fig. 5.26

⚠ CAUTION

- Power cords and communication wiring must be laid out separately, they cannot be placed in the same conduit. Use a power supply conduit to isolate if the current of the power supply is less than 10 A. If the current is greater than 10 A but less than 50 A, the spacing must exceed 50 mm at all times. Otherwise, it may lead to electromagnetic interference.
- Arrange the refrigerant piping, power cords and communication wiring in parallel, but do not tie the communication wiring together with the refrigerant piping or power cords.
- Power cords and communication wiring should not come in contact with the internal piping so as to prevent the high temperature piping from damaging the wires.

5.10.4 Connecting the power cord

⚠ CAUTION

- Do not connect the power supply to the communication terminal block. Otherwise, the whole system may fail.
- Turn off the power supply first.
- Connect the earth wires , earth wires must use yellow-green wire.
- Earth wires are recommended to perform curling.
- Do tighten the terminal with an appropriate screwdriver. Screwdrivers that are too small may damage the terminal head, and cannot tighten it.

⚠ CAUTION

- The power supply cable diameter must comply with the specified specification.
- The power supply cable must be clamped to prevent external force being applied to the terminal.

1. Use round-type terminals of the correct specifications to connect the power cable.

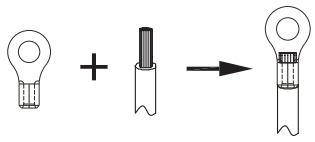

Fig 5.27

⚠ WARNING

- Use rubber cable grommets to knockout holes to avoid power supply cable and communication wiring being worn.

2. Connect the power cord according to the sign “L,N” and connect the earth wire according to the sign “⏚”.

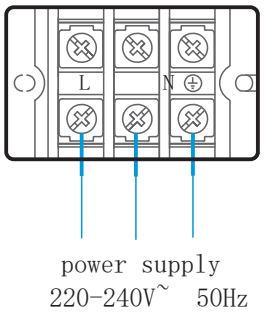

Fig 5.28

⚠ WARNING

- Terminals must be used for connection. Use round-type terminals of the correct specifications to connect the power cables. Do not directly connect the cable ends. Use the correct terminal, or it may cause heating and fire.

3. Fasten and fix the cables with wire clamp to avoid stress on the terminals.

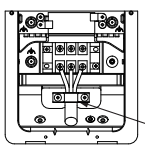

Fig 5.29

4. Press the plastic board of the power line terminal back and confirm that the power phase sequence is correct again.

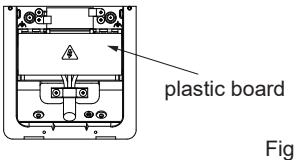

Fig 5.30

⚠ WARNING

- Select a proper torque according to the screw size.
- Too small torque may cause poor contact, resulting in heating of the terminals and fire. Too large torque may damage the screws and power supply terminals.

The size of the screws and recommended torque are as follows:

Table 5.8

Screw size	Standard value (kgf.cm)/(Nm)
M4	12.2/1.2

⚠ CAUTION

- During installation, the earth wire shall be longer than the current carrying conductor to ensure that when the fixing device is loose, the earth wire is still not stressed and can be reliably earthed.
- When inserting the strong-current cables and communication wiring into the wiring holes, they must be equipped with wiring across rings. Otherwise, they may be worn out by the sheet mental and cause electric leakage or short circuit.

Outdoor unit wiring diagram

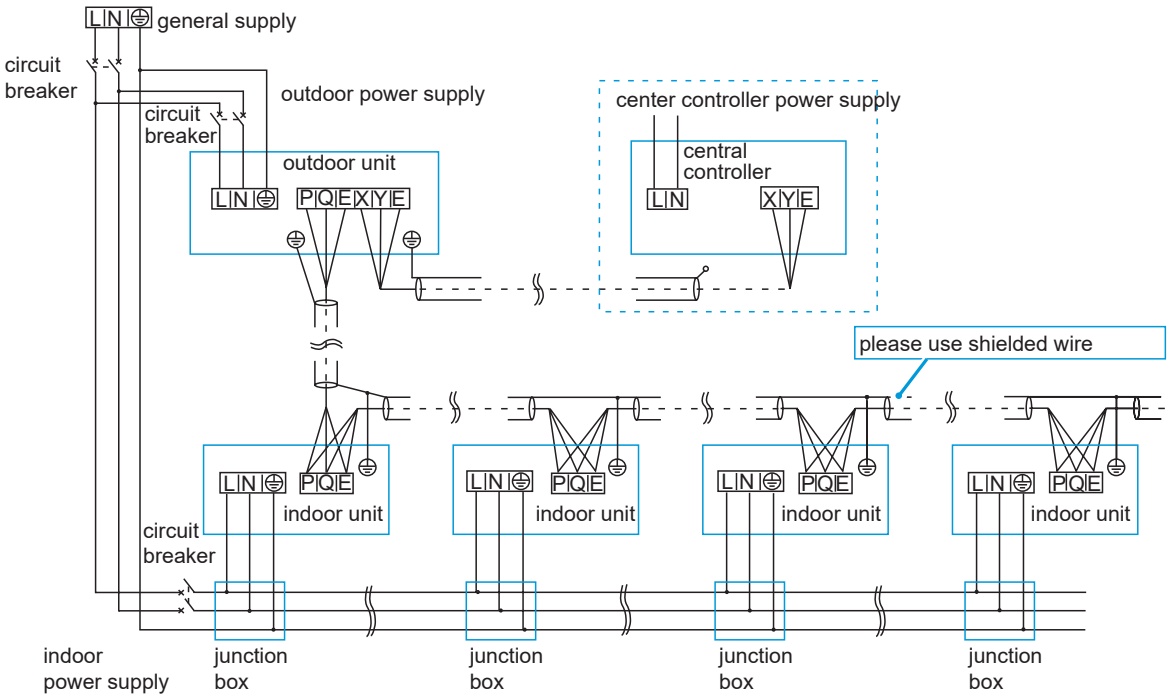

Outdoor unit electrical control system wiring diagram Fig 5.31

⚠ WARNING

- Do not connect the earth wire of the lightning rod to the unit shell. The earth wires of the lightning rod and the power cable must be configured separately.
- Each unit shall be equipped with a circuit breaker for short circuits and abnormal overload protection. In addition, the indoor and ODUs shall be equipped with a main circuit breaker respectively to connect or disconnect the main power supply of the indoor and ODUs.

6 COMMISSIONING

6.1 Overview

After installation, and once the field settings have been defined, the installation personnel is obliged to verify the correctness of the operations. Follow the steps below to perform the test run.

This chapter describes how the test run can be carried out once the installation is complete, and other relevant information.

The test run usually includes the following stages:

1. Review the "Checklist Before Test Run".
2. Implement the test run.
3. Correct the errors before the test run.
4. Run the system.

6.2 Precautions When Commissioning

⚠ WARNING

During the test run, the outdoor unit operates at the same time with indoor units connected to it. It is very dangerous to commission indoor units during the test run.

Do not insert fingers, sticks, or other items into the air inlet or outlet. Do not remove the fan mesh cover.

NOTE

Note that the required input power may be higher when this unit is run for the first time. This phenomenon is due to the compressor which needs to run for 50 hours before it can achieve a stable operating and power consumption state. Make sure the power supply is turned on 12 hours before operations so that the crankcase heater is properly energized. This is also to protect the compressor.

6.3 Checklist Before Commissioning

Once this unit is installed, check the following items first. After all the following checks have been completed.

☐	**Installation** Check if the unit is installed correctly to prevent strange noises and vibrations when the unit starts.
☐	**Field wiring** Based on the wiring schematic and the relevant regulations, make sure the field wiring is based on the instructions described in section 5.10 on connecting wires.
☐	**Earth wirings** Make sure the earth wirings is connected correctly, and the earthing terminal is tight.
☐	**Insulation test of main circuit** Use the megameter of 500V, apply a voltage of 500V DC between the power terminal and the earth terminal. Check that the insulation resistance is above 2 MΩ. Do not use the megameter on the transmission line.
☐	**Fuses, circuit breakers, or protection devices** Check that the fuses, circuit breakers, or locally installed protection devices comply with the size and type specified in section 4.4.2 on the requirements for safety devices. Make sure you use fuses and protection devices.
☐	**Internal wiring** Visually inspect if the connections between the electrical component box and the interior of the unit is loose, or if the electrical components are damaged.
☐	**Piping dimensions and insulation** Make sure the installation piping dimensions are correct, and the insulation work can be carried out normally.
☐	**Stop valve** Make sure the stop valve is open on both the liquid, low pressure and high pressure gas sides.
☐	**Equipment damage** Check for damaged components and extruded piping inside the unit.
☐	**Refrigerant leak** Check for refrigerant leaks inside the unit. If there is a refrigerant leak, try to repair the leak. If the repair is not successful, please call the local dealer. Do not come in contact with the refrigerant leaking from the refrigerant piping connections. It may cause frostbite.
☐	**Oil leak** Check if there is oil leaking from the compressor. If there is an oil leak, try to repair the leak. If the repair is not successful, please call the local dealer.
☐	**Air inlet/outlet** Check for paper, cardboard or any other material that may obstruct the air inlet and outlet of the equipment.
☐	**Add additional refrigerant** The amount of refrigerant to be added to this unit should be marked on the "Confirmation Table" which is placed at electrical control box front cover.
☐	**Installation date and field settings** Make sure the installation date is recorded on the label of the electric control box cover, and the field settings are recorded as well.

6.4 Correcting After Abnormal Completion of Test Run

The test run is considered complete when there is no error code on the user interface or the outdoor unit display. When an error code is displayed, correct the operation based on the description in the error code table. Try to conduct the test run again to check that the exception has been corrected.

INFORMATION

Refer to the installation manual of the indoor unit for details on other error codes related to the indoor unit.

6.5 Operating This Unit

Once the installation of this unit is completed, and the test run of the outdoor and indoor units is done, you can start to run the system.

The indoor unit user interface should be connected to facilitate the operations of the indoor unit. Please refer to the installation manual of the indoor unit for more details.

7 MAINTENANCE AND REPAIR

INFORMATION

Arrange for the installation personnel or service dealer to carry out one maintenance every year.

7.1 Overview

This chapter contains the following information:

- Take electrical hazards preventive measures during system maintenance and repair.

7.2 Safety Precautions

NOTE

Before carry out any maintenance or repair work, touch the metal parts of the unit to dissipate static electricity and protect the PCB.

7.2.1 Prevent electrical hazards

When maintaining and repairing the inverter module

1. Do not open the cover of the electrical component box within 5 minutes after the power is switched off.

2. Verify that the power supply is switched off before you use the measuring instrument to measure the voltage between the main capacitor and the main terminal ensure that the capacitor voltage in the main circuit is less than 36 VDC. the position of main terminal have be shown in the Wiring nameplate(The port of CN38 on the inverter module board).

3. Pull out the plug connecting to the power cord of the fan to prevent the fan from rotating when it is windy outside. The strong winds will cause the fan to rotate and generate electricity which can charge the capacitor or terminals, leading to an electric shock. At the same time, do take note of any mechanical damage. The blades of a high speed rotating fan are very dangerous and cannot be operated by one person alone.

4. Once the maintenance or repair is completed, remember to reconnect the plug to the terminal; otherwise, a fault will be reported for the main control board.

5. When the unit is power on, the fan of the unit with auto snow-blowing function will run periodically, so make sure the power supply is off before touching the unit.

Please refer to the wiring schematic on the unit.

8 TECHNICAL DATA

8.1 Dimensions

NOTE

- Product dimension may slight differ for different panel used, tolerance range ±30mm, the actual size prevail to your purchasing.
- Product picture on the page is for reference only.

20kW

Unit: mm

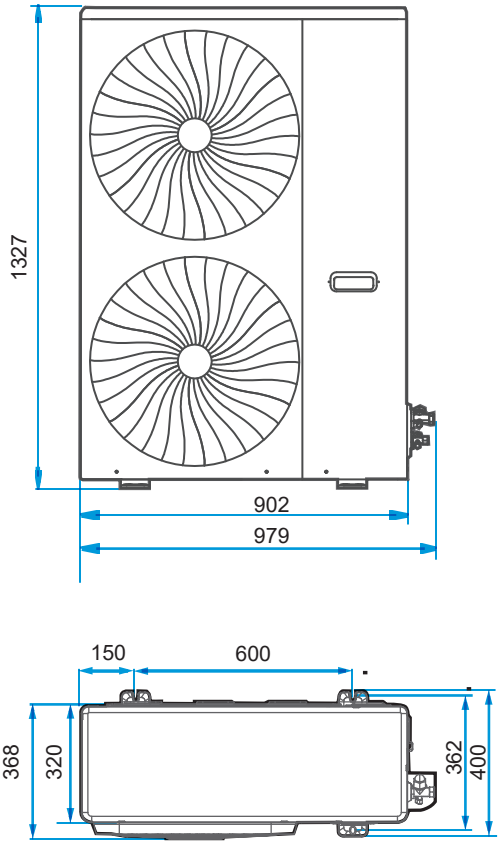

Fig. 8.1

8.2 Component Layout And Refrigerant Circuits

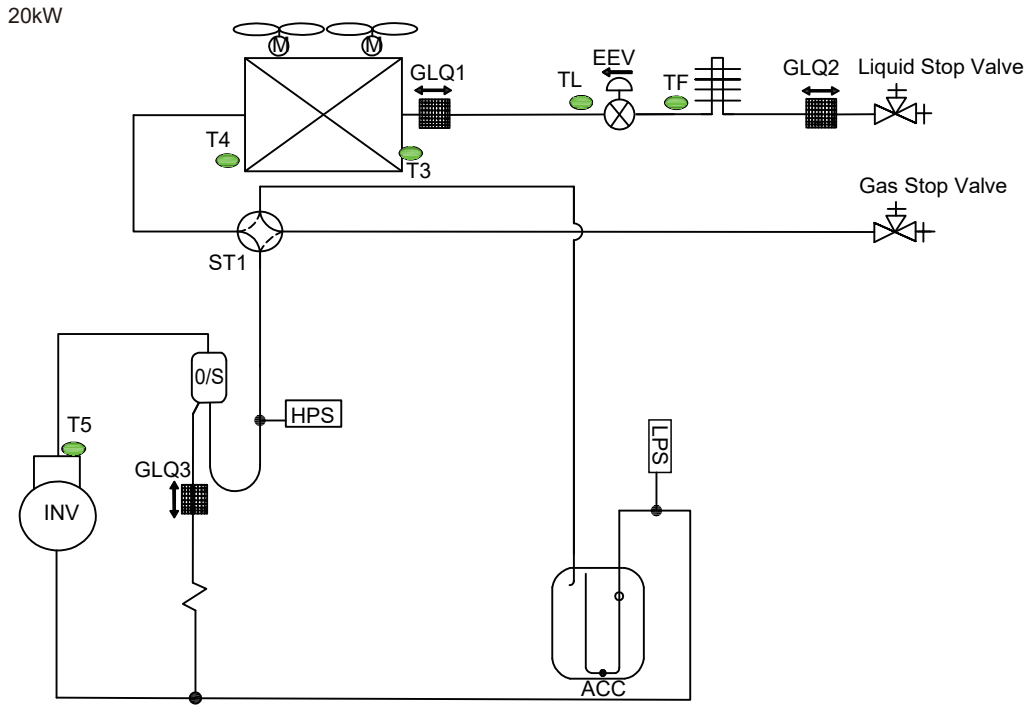

Fig. 8.2

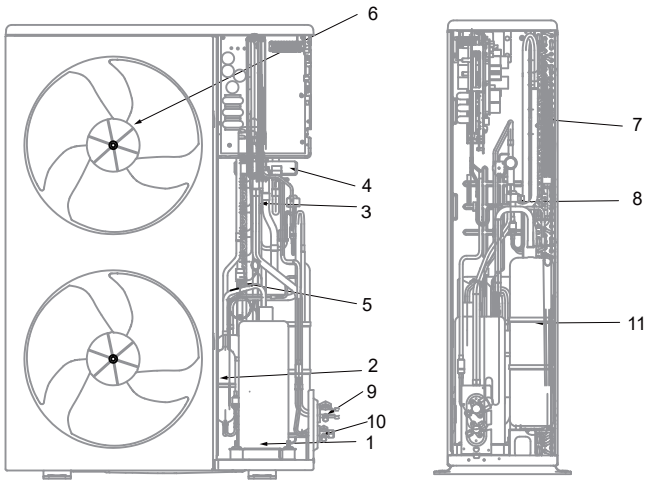

Fig 9.4

Table 8.1

Legend	
No.	Parts name
1	Inverter compressor
2	Oil separator
3	High pressure switch
4	4-way valve
5	High pressure sensor
6	Inverter fan
7	Heat exchanger
8	Electronic expansion valve (EEVA)
9	Stop valve (gas side)
10	Stop valve (liquid side)
11	Gas-liquid separator

Table 8.2

	Legend
T3	Main heat exchanger pipe temperature sensor
T4	Outdoor ambient temperature sensor
T5	Liquid stop valve inlet temperature sensor
TL	Condenser outlet temperature sensor

16127000005647 V.A

印刷技术要求

材质	封面，封底：80克双胶纸，内页：80g双胶纸
规格	210*297(双面)
颜色	黑白
其他	/

设计更改记录表（仅做说明用，不做菲林）

版本升级	更改人	更改日期	更改主要内容	涉及更改页面 （印刷页码）