

ROOM AIR CONDITIONER

USER MANUAL

MODEL NUMBER:

MFEZ20VA-N MFEZ50VA-N
MFEZ26VA-N MFEZ60VA-N
MFEZ35VA-N MFEZ70VA-N
MFEZ80VA-N

Warning notices: Before using this product, please read this manual and SAFETY MANUAL(if any)carefully and keep it for future reference. The design and specifications are subject to change without prior notice for product improvement. Consult with your dealer or manufacturer for details.
The diagram above is just for reference. Please take the appearance of the actual product as the standard.

THANK YOU LETTER

Thank you for choosing Midea! Before using your new Midea product, please read this manual thoroughly to ensure that you know how to operate the features and functions that your new appliance offers in a safe way.

CONTENTS

THANK YOU LETTER 01
Safety Precautions 02
Specification 07
Confirmed It Before You Get Started 08
Get to Know Your AC 09
Care and Maintenance 13
Troubleshooting 15
Let's Start Installing Your AC 18
Installation Overview 19
Installation Summary - Indoor Unit 20
Install Your Indoor Unit 21
Install Your Outdoor Unit 31
Refrigerant Piping Connection 35
Air Evacuation 39
Electrical and Gas Leak Checks 41
Test Run 42
Remote Controller Specifications 43
Packing and Unpacking The Unit 55
Trademarks, Copyrights and Legal Satement 56
Disposal and Receycling 56
Data Protection Notice 57

Safety Precautions

It's really important you read Safety Precautions Before Operation and Installation Incorrect installation due to ignoring instructions can cause serious damage or injury. The seriousness of potential damage or injuries is classified as either a WARNING or CAUTION.

Explanation of Symbols

WARNING
This symbol indicates the possibility of personnel injury or loss of life.

CAUTION
This symbol indicates the possibility of property damage or serious consequences.

Attention
The signal word indicates important information (e.g. damage to property), but not danger.

⚠ WARNING FOR PRODUCT USE

- Turn off the air condtioner and disconnect the power before performing any cleaning, installation or repairing. Failure to do so can cause electric shock.
- If an abnormal situation arises (like a burning smell), immediately turn off the unit and disconnect the power. Call your dealer for instructions to avoid electric shock, fire or injury.
- Do not insert fingers, rods or other objects into the air inlet or outlet. This may cause injury, since the fan may be rotating at high speeds.
- Do not use flammable sprays such as hair spray, lacquer or paint near the unit. This may cause fire or combustion.
- Do not operate the air conditioner in places near or around combustible gases. Emitted gas may collect around the unit and cause explosion.
- Do not operate your air conditioner in a wet room such as a bathroom or laundry room. Too much exposure to water can cause electrical components to short circuit.
- Do not expose your body directly to cool air for a prolonged period of time.
- Do not allow children to play with the air conditioner. Children must be supervised around the unit at all times.
- If the air conditioner is used together with burners or other heating devices, thoroughly ventilate the room to avoid oxygen deficiency.
- In certain functional environments, such as kitchens, server rooms, etc., the use of specially designed air-conditioning units is highly recommended.
- This appliance can be used by children aged from 8 years and above and persons with reduced physical, sensory or mental capabilities or lack of experience and knowledge if they have been given supervision or instruction concerning use of the appliance in a safe way and understand the hazards involved. Children shall not play with the appliance. Cleaning and user maintenance shall not be made by children without supervision(European Union countries).

- This appliance is not intended for use by persons(including children) with reduced physical, sensory or mental capabilities, or lack of experience and knowledge, unless they have been given supervision or instruction concerning use of the appliance by a person responsible for their safety. Children should be supervised to ensure that they do not play with the appliance.

⚠ ELECTRICAL WARNINGS

- Only use the specified power cord. If the power cord is damaged, it must be replaced by the manufacturer, its service agent or similarly qualified persons in order to avoid a hazard.
- The product must be properly grounded at the time of installation, or electric shock may occur.
- For all electrical work, follow all local and national wiring standards, regulations, and the Installation Manual. Connect cables tightly, and clamp them securely to prevent external forces from damaging the terminal. Improper electrical connections can overheat and cause fire, and may also cause shock. All electrical connections must be made according to the Electrical Connection Diagram located on the panels of the indoor and outdoor units.
- All wiring must be properly arranged to ensure that the control board cover can close properly. If the control board cover is not closed properly, it can lead to corrosion and cause the connection points on the terminal to heat up, catch fire, or cause electric shock.
- Disconnection must be incorporated in the fixed wiring in accordance with the wiring rules.
- Do not pull power cord to unplug unit. Hold the plug firmly and pull it from the outlet. Pulling directly on the cord can damage it, which can lead to fire or electric shock.
- Do not modify the length of the power supply cord or use an extension cord to power the unit.
- Do not share the electrical outlet with other appliances. Improper or insufficient power supply can cause fire or electrical shock.
- Keep power plug clean. Remove any dust or grime that accumulates on or around the plug. Dirty plugs can cause fire or electric shock.
- If connecting power to fixed wiring, an all-pole disconnection device which has at least 3mm clearances in all poles, and have a leakage current that may exceed 10mA, the residual current device(RCD) having a rated residual operating current not exceeding 30mA, and disconnection must be incorporated in the fixed wiring in accordance with the wiring rules.

TAKE NOTE OF FUSE SPECIFICATIONS

The air conditioner's circuit board (PCB) is designed with a fuse to provide overcurrent protection. The specifications of the fuse are printed on the circuit board , such as : T3.15AL/250VAC, T5AL/250VAC, T3.15A/250VAC, T5A/250VAC, T20A/250VAC, T30A/250VAC,etc.

NOTE: For the units with R32 refrigerant , only the blast-proof ceramic fuse can be used.

UV-C lamp(Applicable to the unit contains an UV-C lamp only)

This appliance contains a UV-C lamp. Read the maintenance instructions before opening the appliance.

- Do not operate UV-C lamps outside of the appliance.
- Appliances that are obviously damaged must not be operated.
- Unintended use of the appliance or damage to the housing may result in the escape of dangerous UV-C radiation. UV-C radiation may, even in small doses, cause harm to the eyes and skin.
- Before opening doors and access panels bearing the ULTRAVIOLET RADIATION hazard symbol for the conducting USER MAINTENANCE, it is recommended to disconnect the power.
- The UV-C lamp can not be cleaned, repaired and replaced.
- UV-C BARRIERS bearing the ULTRAVIOLET RADIATION hazard symbol should not be removed.

⚠ WARNING This appliance contains an UV emitter. Do not stare at the light source. The appliance must be disconnected from the supply mains before any cleaning or other maintenance.

⚠ WARNINGS FOR PRODUCT INSTALLATION

- Installation must be performed by an authorized dealer or specialist. Defective installation can cause water leakage, electrical shock, or fire.
- Installation must be performed according to the installation instructions. Improper installation can cause water leakage, electrical shock, or fire.
- Contact an authorized service technician for repair or maintenance of this unit. This appliance shall be installed in accordance with national wiring regulations.
- Only use the included accessories, parts, and specified parts for installation. Using non-standard parts can cause water leakage, electrical shock, fire, and can cause the unit to fail.
- Install the unit in a firm location that can support the unit's weight. If the chosen location cannot support the unit's weight, or the installation is not done properly, the unit may drop and cause serious injury and damage.
- Install drainage piping according to the instructions in this manual. Improper drainage may cause water damage to your home and property.
- For units that have an auxiliary electric heater, do not install the unit within 1 meter (3 feet) of any combustible materials.
- Do not install the unit in a location that may be exposed to combustible gas leaks. If combustible gas accumulates around the unit, it may cause fire.
- Do not turn on the power until all work has been completed.
- When moving or relocating the air conditioner, consult experienced service technicians for disconnection and reinstallation of the unit.
- How to install the appliance to its support, please read the information for details in "indoor unit installation" and "outdoor unit installation" sections .

⚠ CAUTION

- Turn off the air conditioner and disconnect the power if you are not going to use it for a long time.
- Turn off and unplug the unit during storms.
- Make sure that water condensation can drain unhindered from the unit.
- Do not operate the air conditioner with wet hands. This may cause electric shock.
- Do not use device for any other purpose than its intended use.
- Do not climb onto or place objects on top of the outdoor unit.
- Do not allow the air conditioner to operate for long periods of time with doors or windows open, or if the humidity is very high.

CLEANING AND MAINTENANCE WARNINGS

- Turn off the device and disconnect the power before cleaning. Failure to do so can cause electrical shock.
- Do not clean the air conditioner with excessive amounts of water.
- Do not clean the air conditioner with combustible cleaning agents. Combustible cleaning agents can cause fire or deformation.

Note about Fluorinated Gasses

- This air-conditioning unit contains fluorinated greenhouse gasses. For specific information on the type of gas and the amount, please refer to the relevant label on the unit itself or the “Owner's Manual - Product Fiche ” in the packaging of the outdoor unit. (European Union products only).
- Installation, service, maintenance and repair of this unit must be performed by a certified technician.
- Product uninstallation and recycling must be performed by a certified technician.
- For equipment that contains fluorinated greenhouse gases in quantities of 5 tonnes of CO2 equivalent or more, but of less than 50 tonnes of CO2 equivalent, If the system has a leak-detection system installed, it must be checked for leaks at least every 24 months.
- When the unit is checked for leaks, proper record-keeping of all checks is strongly recommended.

⚠ WARNING FOR USING R32 REFRIGERANT

(Applicable for units using R32 refrigerant only)

- When flammable refrigerant are employed, appliance shall be stored in a well - ventilated area where the room size corresponds to the room area as specific for operation.
- Appliance shall be installed, operated and stored in a room with a floor area larger than $4m^2$.
- Reusable mechanical connectors and flared joints are not allowed indoors.
- When mechanical connectors are reused indoors, sealing parts shall be renewed. When flared joints are reused indoors, the flare part shall be re-fabricated.
- Mechanical connectors used indoors shall comply with ISO 14903.
- Do not use means to accelerate the defrosting process or to clean, other than those recommended by the manufacturer.
- The appliance shall be stored in a room without continuously operating ignition sources (for example: open flames, an operating gas appliance or an operating electric heater).
- Do not pierce or burn.
- Be aware that refrigerants might not contain an odour.

Specification

Product Model	MFEZ20VA-N MFEZ20VA-W	MFEZ26VA-N MFEZ26VA-W	MFEZ35VA-N MFEZ35VA-W
Power source	220-240V~ 50Hz, 1Ph		
Cooling capacity	2.15kW	2.60kW	3.50kW
Heating capacity	2.45kW	3.25kW	3.80kW
Rated current	10.5A	10.0A	10.5A
Rated power input	2300W	2300W	2300W
Outdoor unit resistance class	IPX4		

Product Model	MFEZ50VA-N MFEZ50VA-W	MFEZ60VA-N MFEZ60VA-W	MFEZ70VA-N MFEZ70VA-W	MFEZ80VA-N MFEZ80VA-W
Power source	220-240V~ 50Hz, 1Ph			
Cooling capacity	5.00kW	6.00kW	7.00kW	7.95kW
Heating capacity	6.00kW	6.55kW	7.70kW	8.70kW
Rated current	15.5A	15.5A	17.5A	17.5A
Rated power input	3400W	3400W	4050W	4050W
Outdoor unit resistance class	IPX4			

Confirmed It Before You Get Started

NOTE ：Operating Temperature

When your air conditioner is used outside of the following temperature ranges, cetain safety protection features may activate and cause the unit to disable.

Inverter Split Type

	COOL Mode	HEAT Mode	DRY Mode
Room Temp.	16°C~32°C(60°F~90°F)	0°C~30°C(32°F~86°F)	10°C~32°C(50°F~90°F)
Outdoor Temp.	0°C~50°C(32°F~122°F)	-15°C~24°C(5°F~75°F)	0°C~50°C(32°F~122°F)
	-15°C~50°C(5°F~122°F) For models withlow temp. cooling systems.		
	0°C~52°C(32°F~126°F) For special tropical models	-15°C~24°C(5°F~75°F)	0°C~52°C(32°F~126°F) For special tropical models

FOR OUTDOOR UNITS WITH AUXILIARY ELECTRIC HEATER

When outside temperature is below 0°C (32°F), we strongly recommend keeping the unit plugged in at all time to ensure smooth ongoing performance.

Fixed-speed Type

	COOL Mode	HEAT Mode	DRY Mode
Room Temp.	16°C~32°C (60°F~90°F)	0°C~30°C (32°F~86°F)	10°C~32°C(50°F~90°F)
Outdoor Temp.	18°C~43°C (64°F~109°F)	-7°C~24°C(19°F~75°F)	11°C~43°C (52°F~109°F)
	-7°C~43°C (19°F~109°F) For models with low-temp cooling systems		18°C~43°C (64°F~109°F)
	18°C~52°C (64°F~126°F) For special tropical models	-7°C~24°C(19°F~75°F)	18°C~52°C (64°F~126°F) For special tropical models

NOTE: Room relative humidity less than 80%. If the air conditioner operates in excess of this figure, the surface of the air conditioner may attract condensation. Please sets the vertical air flow louver to its maximum angle (vertically to the floor), and set HIGH fan mode.

Get to Know Your AC

NOTE

- Different models have different front panel and display window. Not all the indicators describing below are available for the air conditioner you purchased. Please check the indoor display window of the unit you purchased.
- Illustrations in this manual are for explanatory purposes. The actual shape of your indoor unit may be slightly different. The actual shape shall prevail.

Indoor Unit Display

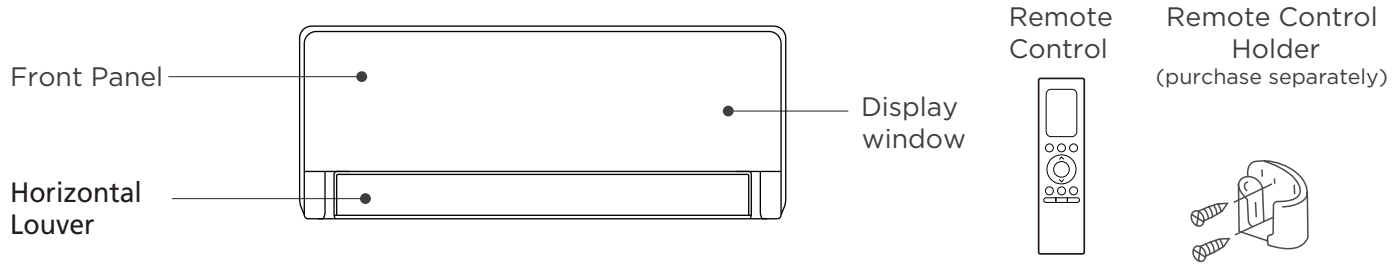

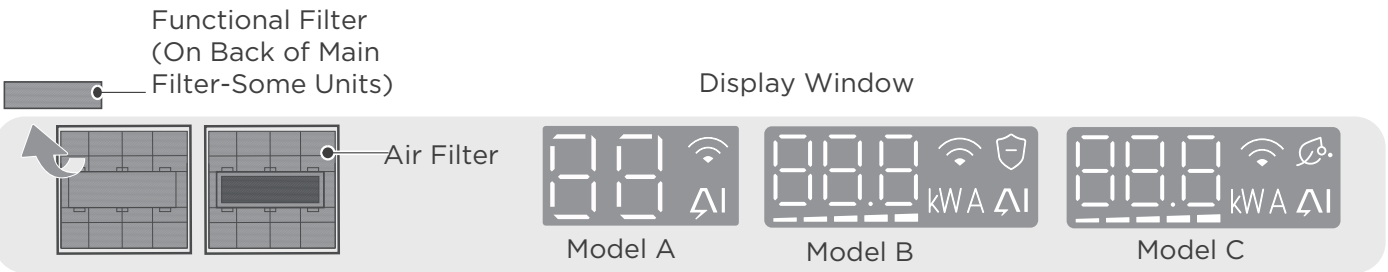

Display Code	Display Code Meanings
	• Displays temperature, operation feature and error codes. • For some units, when GEAR function is activated, the display window will display and flash the target power value(kW), current value(A) or gear levels (Lx)for 15 seconds. The gear levels displays as: L1 gear(–), L2 gear(––), L3 gear(–––), L4 gear(––––), L5 gear(–––––).
	• When Air magic feature is turned on(some units).
	• When ECOMASTER feature is turned on.
	• When Wireless Control feature is activated(some units).
 (for 3s when)	• Timer On is set (if the unit is OFF, " ON " remains on when Timer On is set). • Air magic, UV lamp, Swing, Cool(Heat) Flash , Breeze away or Silent feature is turned on.
 (for 3s when)	• Timer Off is set. • Air magic, UV lamp, Swing, Cool(Heat) Flash , Breeze away or Silent feature is turned off.
	• When Active Clean feature is turned on.
	• When defrosting(for cooling & heating units).
	• When 8°C (46°F) heating feature is turned on(for cooling & heating units).
	• When Fresh feature is turned on (some units).

To further optimize the performance of your unit, do the following:

- Keep doors and windows closed.
- Limit energy usage by using TIMER ON and TIMER OFF functions.
- Do not block air inlets or outlets.
- Regularly inspect and clean air filters.

More features

NOTE

Not all the functions are available for the air conditioner you purchased, please check the indoor display and remote control of your unit.

- **Auto-Restart**
  If the unit loses power, it will automatically restart with the prior settings once power has been restored.

- **Air magic function (some units)**

  The ion generator is energized and will help to purify the air in the room.

- **Active Clean function(some units)**

  -- The Active Clean Technology washes away dust when it adheres to the heat exchanger by automatically freezing and then rapidly thawing the frost. A “pi-pi” sound will be heard. The Active clean operation is used to produce more condensed water to improve the cleaning effect, and the cold air will blow out. After cleaning, the internal wind wheel then keeps operating with hot air to blow-dry the evaporator, thus keeping the inside clean.
  -- When this function is turned on, the indoor unit display window appears “CL ” , after 20 to 45 minutes, the unit will turn off automatically and cancel Active Clean function.

- **Louver Angle Memory**

  When turning on your unit, the louver will automatically resume its former angle.

- **ECOMASTER function**

  Under cooling/heating mode, the fan speed will change to Auto, the set temperature will remain unchanged which brings more comfortable feelings and power-saving, and reduces temperature fluctuations.

- **Refrigerant Leakage Detection**

  The indoor unit will automatically display “EL0C” when it detects refrigerant leakage.

- **Cool Flash function**
  Cool Flash technology can very rapidly cool an entire room. This is achieved by producing a large air volume and high flow of air.

- **Heat Flash function** (for cooling & heating units)
  Similarly, a fast and strong flow of heated air can warm up an entire room in a short time.

- **Wireless Control (some units)**

  Wireless control allows you to control your air conditioner using your mobile phone and a wireless connection.

  For the USB device access, replacement, maintenance operations must be carried out by professional staff.

- **Breeze Away Operation**
  -- Press the Breeze Away button on the remote control to activate the avoiding direct air blowing on the body.
  -- Under Breeze Away operation, the system will adjust the louver angles and fan speed automatically. You can also choose the fan speed by remote controller.
  -- This feature is only available under Cool, Dry or Fan mode.

- **Sleep Operation**

  The SLEEP function is used to decrease energy use while you sleep.
  When the sleep function is activated, the air conditioner will intelligently adjust temperature, fan speed to provide a more comfortable sleeping environment. You can freely set the fan speed and airflow angle when in sleep operation. The sleep function will automatically exit after running for 9 hours.
  Note:
  -The sleep function is not available in Fan and Dry mode.
  -For some models with wireless control feature, the sleep operation time and sleep light can be adjusted through the app.

- **Intelligent Humidity Control Function(some units)**

  Under cooling mode, when this function is activated, the fan speed will change to Auto, the set temperature will remain unchanged, and the system can control the room humidity to ensure that it is not too dry or too damp while maintaining a comfortable temperature. This function can only be activated by the remote controller or APP control.

Manual Operation(without remote)

⚠ **CAUTION :** For product use

The manual button is intended for testing purposes and emergency operation only.
Please do not use this function unless the remote control is lost and it is absolutely necessary. To restore regular operation, use the remote control to activate the unit.
Unit must be turned off before manual operation.

To operate your unit manually:

- Press down the buttons on both side of the panel ,then lift the panel up until it clicks.
- Locate the **MANUAL CONTROL button** on the right-hand side of the electrical control box.
- Press the **MANUAL CONTROL button** one time to activate FORCED AUTO mode.
- Press the **MANUAL CONTROL button** again to activate FORCED COOLING mode.
- Press the **MANUAL CONTROL button** a third time o turn the unit off.
- Close the front panel.

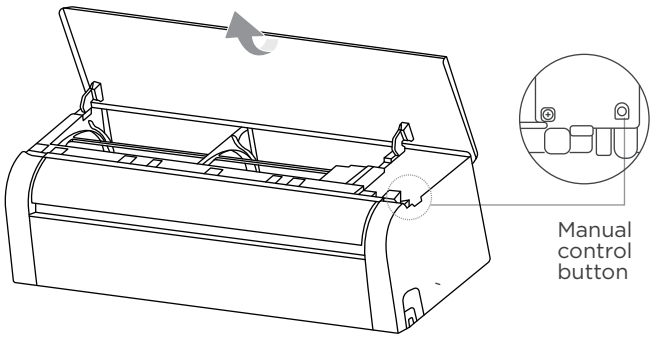

Setting angle of airflow

NOTE : Setting up and down airflow(Remote control)

While the unit is on, use the SWING button on remote control to set the direction (up and down) of airflow. Please refer to the Remote Control operationl for details.

Note on louver angles

- Do not set louver at too vertical an angle for long periods of time When using COOL or DRY mode. It would be condense the water on the louver blade, which will drop on your floor or furnishings.

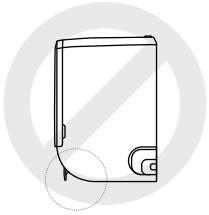

- Setting the louver at too small an angle when using COOL or HEAT mode, can reduce the performance of the AC due to restricted air flow.

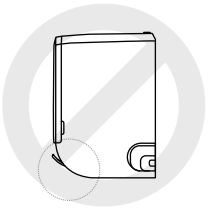

- According to the relative standards requirement, please set the louver to its maximum airflow angle under heating capacity test.

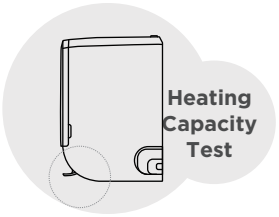

NOTE

Do not move louver by hand. You can turn off the unit and unplug it for a few seconds to restart the unit. It will be reset the louver when you try.

Setting left and right air flow (Manual operation)

The left and right airflow must be set manually.
Grip the deflector rod (See Fig.B) and manually adjust it to your preferred direction.
For some units, the left and right airflow can be set by remote control. Please refer to the Remote Control Manual.

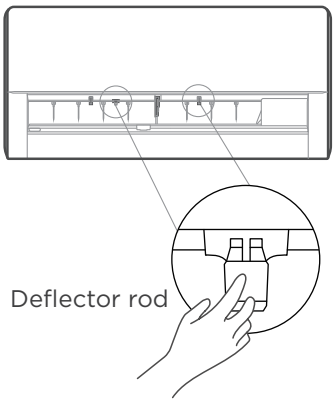

Fig. B

⚠ CAUTION

Do not put your fingers in or near the blower and suction side of the unit. The high-speed fan inside the unit may cause injury.

Care and Maintenance

⚠ CAUTION

- The cooling efficiency of your unit and your health would be damaged for the glogged AC. Make sure to clean the filter every two weeks.
- Always **TURN OFF** your AC system and disconnect its power supply before cleaning or maintenance.
- **Do not** touch air freshening (Plasma) filter at least 10 minutes after turning off the unit.
- Only use a soft, dry cloth to wipe the unit clean. You can use a cloth soaked in warm water to wipe it clean if the unit is especially dirty.
- Do not use chemicals or chemically treated cloths to clean the unit
- Do not use benzene, paint thinner, polishing powder or other solvents to clean the unit. They can cause the plastic surface to crack or deform.
- Do not use water hotter than 40°C (104°F) to clean the front panel. This can cause the panel to deform or become discolored.

Cleaning Your Indoor Unit, Air Filter

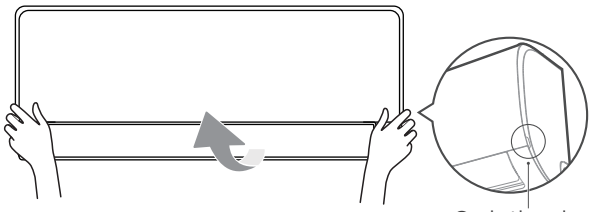

Step 1:

Lift the front panel of the indoor unit.

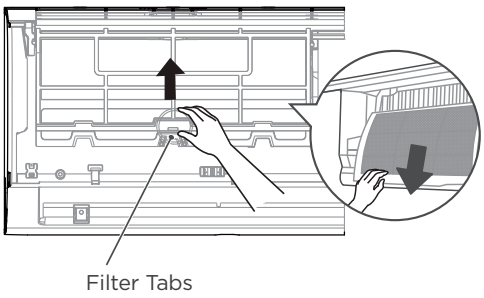

Step 2:

First press the tab on the end of filter to loosen the buckle, lift it up, then pull it towards yourself.

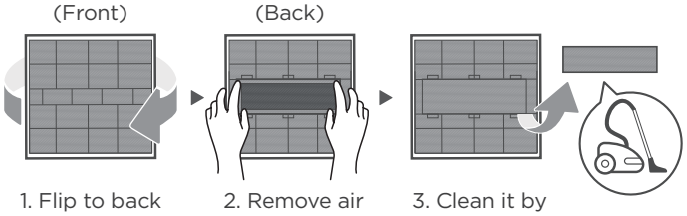

Step 3:

If your filter has a small air freshening filter, unclip it from the larger filter. Clean this air freshening filter with a hand-held vacuum.

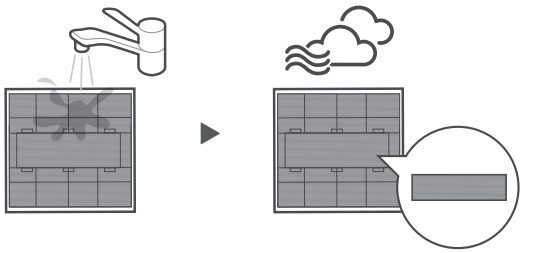

Step 4:

Clean the large air filter with warm, soapy water. Be sure to use a mild detergent. Rinse the filter with fresh water, then shake off excess water. Dry it in a cool, dry place, and refrain from exposing it to direct sunlight.

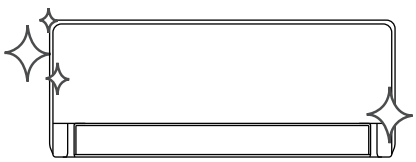

Step 5:

When dry, re-clip the air freshening filter to the larger filter, then slide it back into the indoor unit. Finally, Close the front panel of the indoor unit.

⚠ CAUTION

- Before changing the filter or cleaning, turn off the unit and disconnect its power supply.
- When removing filter, do not touch metal parts in the unit. The sharp metal edges can cut you.
- Do not use water to clean the inside of the indoor unit. This can destroy insulation and cause electrical shock.
- Do not expose filter to direct sunlight when drying. This can shrink the filter.
- Any maintenance and cleaning of outdoor unit should be performed by an authorized dealer or a licensed service provider.
- Any unit repairs should be performed by an authorized dealer or a licensed service provider.

Maintenance your AC.

Maintenance – Long Periods of Non-Use

If you plan not to use your air conditioner for an extended period of time, do the following:

Clean all filters

Turn on FAN function until unit dries out completely

Turn off the unit and disconnect the power

Remove batteries from remote control

Maintenance – Pre-Season Inspection

After long periods of non-use, or before periods of frequent use, do the following:

Check for damaged wires

Clean all filters

Check for leaks



Make sure nothing is blocking all air inlets and outlets

Replace batteries

Troubleshooting

⚠ CAUTION

If any of the following conditions occurs, turn off your unit immediately!
- The wire is damaged or abnormally warm
- You smell a burning odor
- The unit emits loud or abnormal sounds
- A power fuse blows or the circuit breaker frequently trips
- Water or other objects fall into or out of the unit

DO NOT ATTEMPT TO FIX THESE YOURSELF! CONTACT AN AUTHORIZED SERVICE PROVIDER IMMEDIATELY.

Common Issues

The following problems are not a malfunction and in most situations will not require repairs.

Issue	Possible Causes
Unit does not turn on when pressing ON/OFF button	The Unit has a 3-minute protection feature that prevents the unit from overloading. The unit cannot be restarted within three minutes of being turned off.
The unit changes from COOL/HEAT mode to FAN mode	The unit may change its setting to prevent frost from forming on the unit. Once the temperature increases, the unit will start operating in the previously selected mode again. The set temperature has been reached, at which point the unit turns off the compressor. The unit will continue operating when the temperature fluctuates again.
The indoor unit emits white mist	In humid regions, a large temperature difference between the room's air and the conditioned air can cause white mist.
Both the indoor and outdoor units emit white mist	When the unit restarts in HEAT mode after defrosting, white mist may be emitted due to moisture generated from the defrosting process.
The indoor unit makes noises	A rushing air sound may occur when the louver resets its position. A squeaking sound may occur after running the unit in HEAT mode due to expansion and contraction of the unit's plastic parts.
Both the indoor unit and outdoor unit make noises	Low hissing sound during operation: This is normal and is caused by refrigerant gas flowing through both indoor and outdoor units.
	Low hissing sound when the system starts, has just stopped running, or is defrosting: This noise is normal and is caused by the refrigerant gas stopping or changing direction.
	Squeaking sound: Normal expansion and contraction of plastic and metal parts caused by temperature changes during operation can cause squeaking noises.

Issue	Possible Causes
The outdoor unit makes noises	The unit will make different sounds based on its current operating mode.
Dust is emitted from either the indoor or outdoor unit	The unit may accumulate dust during extended periods of non-use, which will be emitted when the unit is turned on. This can be mitigated by covering the unit during long periods of inactivity.
The unit emits a bad odor	The unit may absorb odors from the environment (such as furniture, cooking, cigarettes, etc.) which will be emitted during operations.
	The unit's filters have become moldy and should be cleaned.
The fan of the outdoor unit does not operate	During operation, the fan speed is controlled to optimize product operation.
Operation is erratic, unpredictable, or unit is unresponsive	Interference from cell phone towers and remote boosters may cause the unit to malfunction. In this case, try the following: • Disconnect the power, then reconnect. • Press ON/OFF button on remote control to restart operation.

NOTE: If problem persists, contact a local dealer or your nearest customer service center. Provide them with a detailed description of the unit malfunction as well as your model number.

⚠ CAUTION

When troubles occur, please check the following points before contacting a repair company. some situations will not require repairs.

Problem	Possible Causes	Solution
Poor Cooling Performance	Temperature setting may be higher than ambient room temperature	Lower the temperature setting
	The heat exchanger on the indoor or outdoor unit is dirty	Contact an authorized service center to clean the affected heat exchanger
	The air filter is dirty	Remove the filter and clean it according to instructions
	The air inlet or outlet of either unit is blocked	Turn the unit off, remove the obstruction and turn it back on
	Doors and windows are open	Make sure that all doors and windows are closed while operating the unit
	Excessive heat is generated by sunlight	Close windows and curtains during periods of high heat or bright sunshine
	Too many sources of heat in the room (people, computers, electronics, etc.)	Reduce amount of heat sources
	Low refrigerant due to leak or long-term use	Contact an authorized service center.
	SILENCE function is activated (optional function)	SILENCE function can lower product performance by reducing operating frequency. Turn off SILENCE function.

Problem	Possible Causes	Solution
The unit is not working	Power failure	Wait for the power to be restored
	The power is turned off	Turn on the power
	The fuse is burned out	Contact an authorized service center to replace the fuse
	Remote control batteries are dead	Replace batteries
	The Unit's 3-minute protection has been activated	Wait three minutes after restarting the unit
	Timer is activated	Turn timer off
The unit starts and stops frequently	There's too much or too little refrigerant in the system	Contact an authorized service center
	Incompressible gas or moisture has entered the system.	Contact an authorized service center
	The compressor is broken	Contact an authorized service center
	The voltage is too high or too low	Contact an authorized service center go install a manostat to regulate the voltage
Poor heating performance	The outdoor temperature is extremely low	Use auxiliary heating device
	Cold air is entering through doors and windows	Make sure that all doors and windows are closed during use
	Low refrigerant due to leak or long-term use	Check for leaks, contact an authorized service center
Indicator lamps continue flashing	The unit may stop operation or continue to run safely. If the indicator lamps continue to flash or error codes appear, wait for about 10 minutes. The problem may resolve itself. If not, disconnect the power, then connect it again. Turn the unit on. If the problem persists, disconnect the power and contact your nearest customer service center.	
Error code appears and begins with the letters as the following in the window display of indoor unit: • E(x), P(x), F(x) • EH(xx), EL(xx), EC(xx) • PH(xx), PL(xx), PC(xx)		

NOTE: If your problem persists after performing the checks and diagnostics above, turn off your unit mmediately and contact an authorized service center.

Let's Start Installing Your AC

Check over the accessories

The air conditioning system comes with the following accessories. Use all of the installation parts and accessories to install the air conditioner. Improper installation may result in water leakage, electrical shock and fire, or cause the equipment to fail. The items are not included with the air conditioner must be purchased separately.

Name of Accessories	Q'ty(pc)	Shape	Name of Accessories	Q'ty(pc)	Shape
Manual	1-3		Remote controller	1	
Drain joint (for cooling & heating models)	1		Battery	2	
Seal (for cooling & heating models)	1		Remote controller holder(purchase separately)	1	
Mounting plate	1		Fixing screw for remote controller holder(purchase separately)	2	
Anchor	5~8 (depending on models)		**Small Filter** (Need to be installed on the back of main air filter by the authorized technician while installing the machine)	1~2 (depending on models)	
Mounting plate fixing screw	5~8 (depending on models)				
Copper nut (for some units) (Used to connect the connecting pipes between indoor and outdoor units.)	2		**Cable clamp** (For some units only) During on-site wiring, if choose outdoor power supply and the wire diameter decreases, this cable clamp needs to be used to replace the cable clamp already installed in the wire box in order to crimp the wire tightly.	1	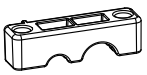

Name	Shape		Quantity(PC)
Connecting pipe assembly	Liquid side	Φ6.35(1/4in)	Parts you must purchase separately. Consult the dealer about the proper pipe size of the unit you purchased.
		Φ9.52(3/8in)	
	Gas side	Φ9.52(3/8in)	
		Φ12.7(1/2in)	
		Φ16(5/8in)	
		Φ19(3/4in)	
Magnetic ring and belt (if supplied ,please refer to the wiring diagram to install it on the connective cable.)	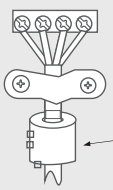 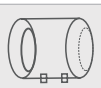 Pass the belt through the hole of the Magnetic ring to fix it on the cable		Varies by model

Installation Overview

NOTE ON ILLUSTRATIONS:

Illustrations in this manual are for explanatory purposes. The actual shape of your indoor unit may be slightly different. The actual shape shall prevail.

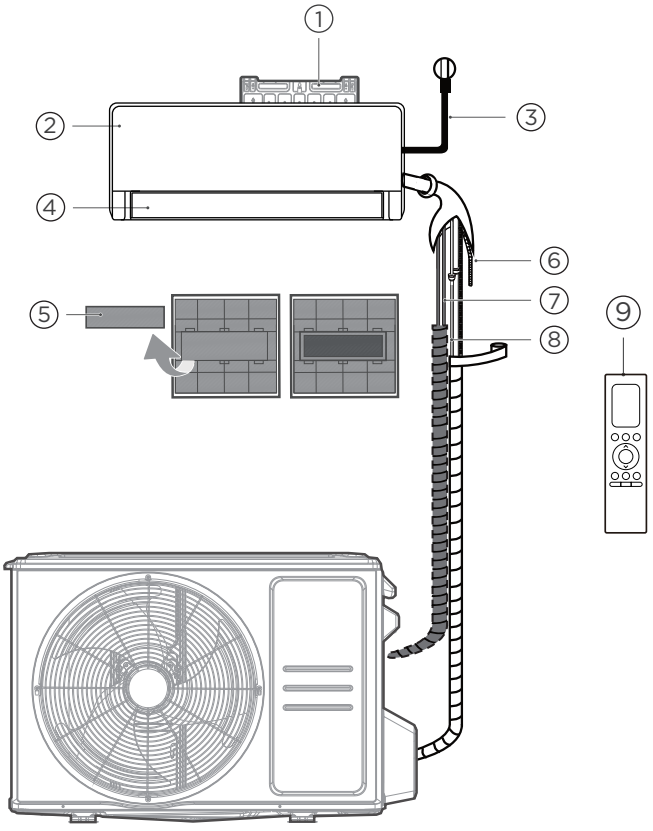

Indoor power supply models

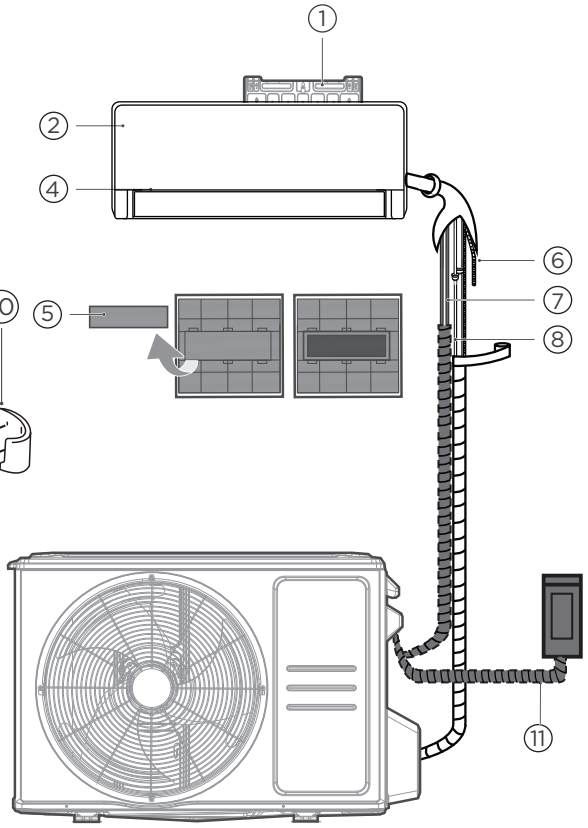

Outdoor power supply models

① Wall Mounting Plate

② Front Panel

③ Power Cable(some units)

④ Louver

⑤ Functional Filter (On Back of Main Filter - Some Units)

⑥ Drainage Pipe

⑦ Signal Cable

⑧ Refrigerant Piping

⑨ Remote Controller

⑩ Remote controller Holder (some units)

⑪ Outdoor Unit Power Cable (some units)

It would be perfect you had these tools



Gloves



Screwdriver & wrench

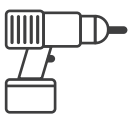

Hammer drill

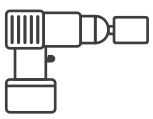

Core drill



Goggles & masks



Vinyl tape

Installation Summary - Indoor Unit

1

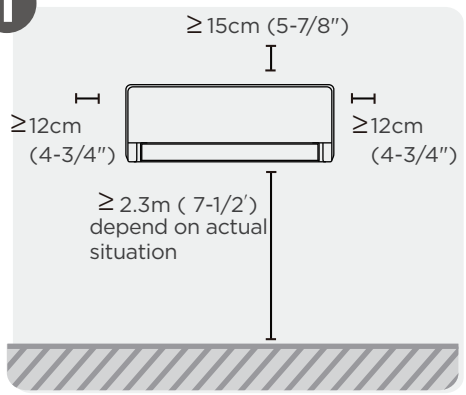

Select Installation Location

2

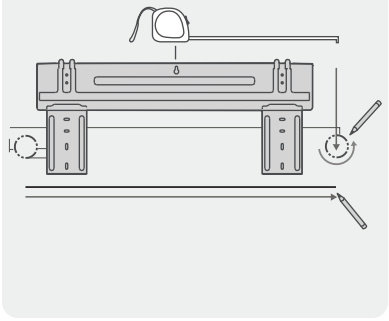

Attach Mounting Plate

3

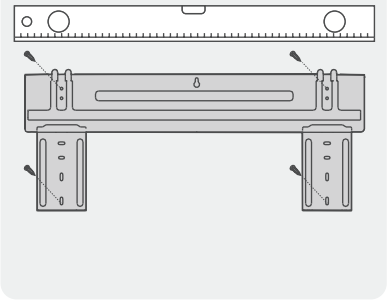

Determine Wall Hole Position

4

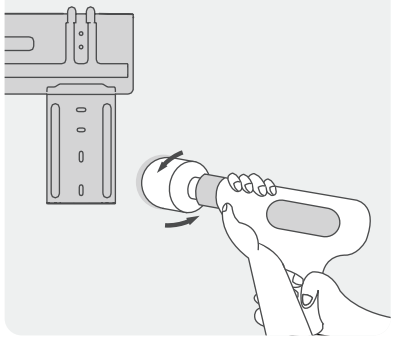

Drill Wall Hole

5

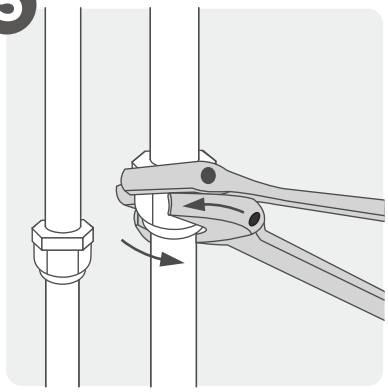

Connect Piping

6

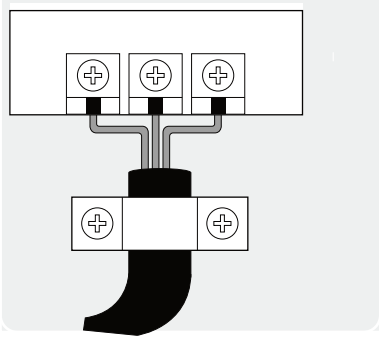

Connect Wiring
(Not applicable for some locations in North America)

7

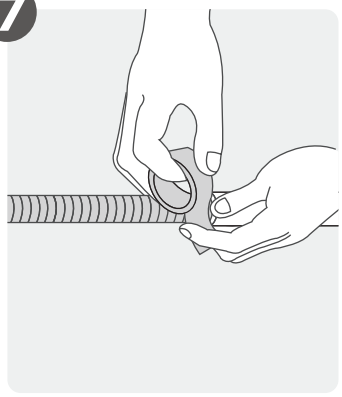

Prepare Drain Hose

8

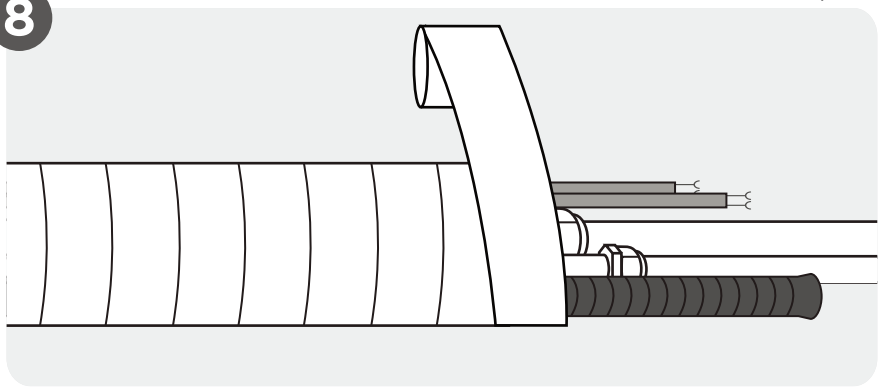

Wrap Piping and Cable
(Not applicable for some locations in North America)

9

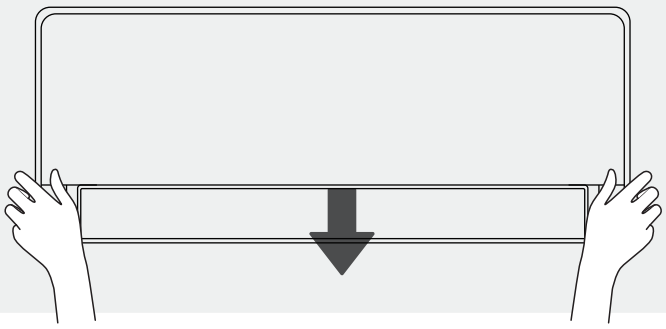

Mount Indoor Unit

Install Your Indoor Unit

1 Select installation location

NOTE : PRIOR TO INSTALLATION

Before installing the indoor unit, refer to the label on the product box to make sure that the model number of the indoor unit matches the model number of the outdoor unit.

The following are standards that will help you choose an appropriate location for the unit.

Proper installation locations meet the following standards:



☑ Good air circulation

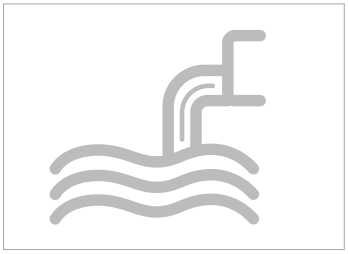

☑ Convenient drainage



☑ Noise from the unit will not disturb other people.



☑ Firm and solid—the location will not vibrate

☑ Strong enough to support the weight of the unit

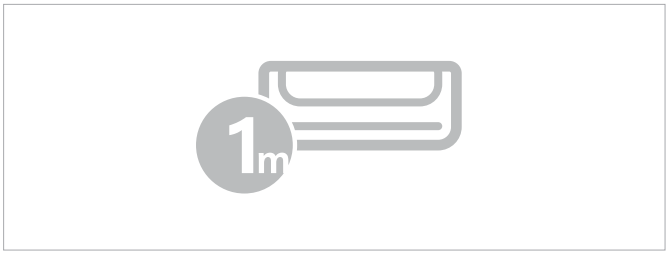

☑ A location at least one meter from all other electrical devices (e.g., TV, radio, computer)

DO NOT install unit in the following locations:

⊘ Near any source of heat, steam, or combustible gas

⊘ Near flammable items such as curtains or clothing

⊘ Near any obstacle that might block air circulation

⊘ Near the doorway

⊘ In a location subject to direct sunlight

NOTE: FOR PRODUCT INSTALLATION

If there is no fixed refrigerant piping:
While choosing a location, be aware that you should leave ample room for a wall hole (see Drill wall hole for connective piping step) for the signal cable and refrigerant piping that connect the indoor and outdoor units. The default position for all piping is the right side of the indoor unit (while facing the unit). However, the unit can accommodate piping to both the left and right.

2 Drill wall hole for connective piping

Determine wall hole location

NOTE : FOR CONCRETE OR BRICK WALLS

If the wall is made of brick, concrete, or similar material, drill 5mm-diameter (0.2in-diameter) holes in the wall and insert the sleeve anchors provided. Then secure the mounting plate to the wall by tightening the screws directly into the clip anchors.

Step 1:

Remove the screw that attaches the mounting plate to the back of the indoor unit.

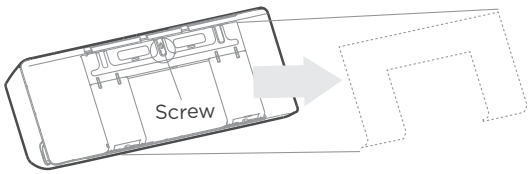

Step 2:

Secure the mounting plate to the wall with the screws provided. Make sure that mounting plate is flat against the wall.

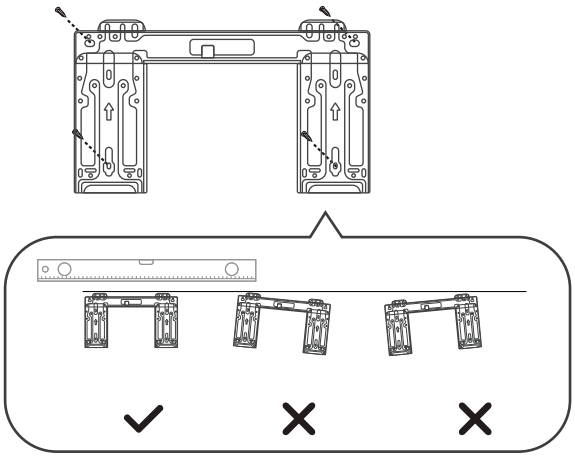

Correct orientation of Mounting Plate

Step 3:

Confirm the mounting plate you own. Different models have different mounting plates. Refer to following mounting plate dimensions to help you determine the optimal position.

Unit:mm(in)

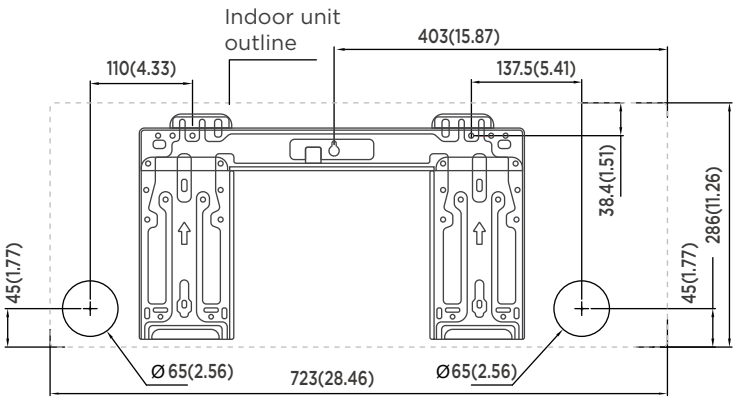

Model A

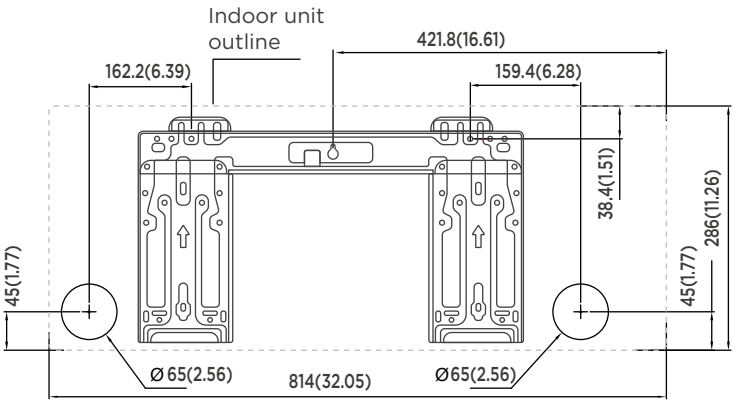

Model B

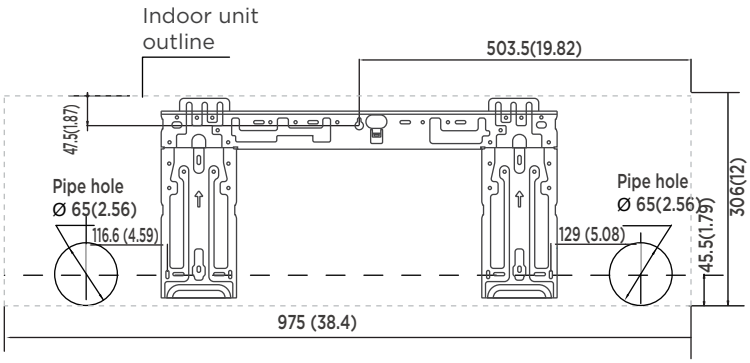

Model C

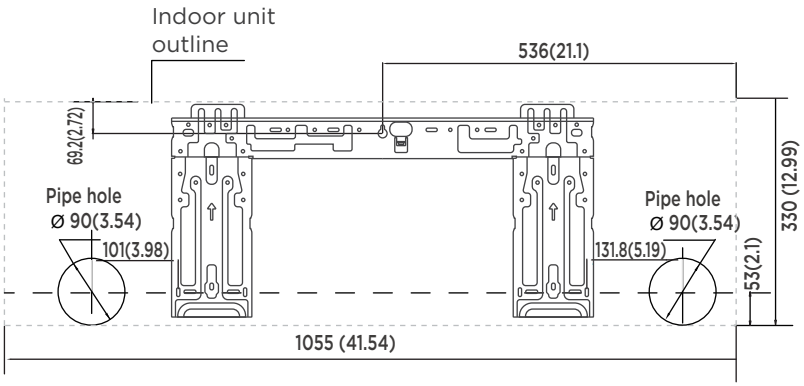

Model D

Drill wall hole

⚠ CAUTION

When drilling the wall hole, make sure to avoid wires, plumbing, and other sensitive components.

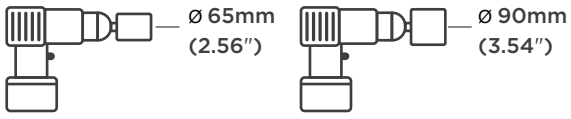

Using a 65mm (2.56″) or 90mm(3.54″) core drill(depending on models)

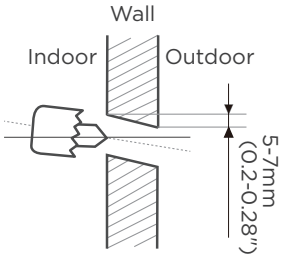

Drill the wall hole

Step 1:

Using a 65mm (2.56″) or 90mm(3.54″) core drill(depending on models), drill a hole in the wall. Make sure that the hole is drilled at a slight downward angle, so that the outdoor end of the hole is lower than the indoor end by about 5mm to 7mm (0.2-0.28″). This will ensure proper water drainage.

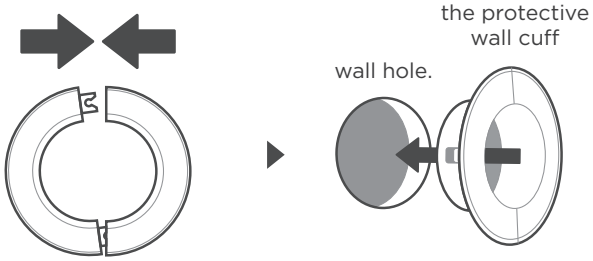

Place the protective wall cuff in the hole.

Step 2:

Place the protective wall cuff in the hole. This protects the edges of the hole and will help seal it when you finish the installation process.

NOTE : THE WALL HOLE SIZE

The size of the wall hole is determined by the connective pipes. When the pipe size of the gas side is Φ16mm(5/8″) or more, the wall hole should be 90mm(3.54in). When the pipe size of gas side is less than Φ16mm(5/8″), the wall hole should be 65mm(2.56in).

3 Install refrigerant pipe & drain hose

NOTE

The refrigerant piping is inside an insulating sleeve attached to the back of the unit. You must prepare the piping before passing it through the hole in the wall. Refer to the Refrigerant Piping connection section of this manual for detailed instructions on pipe flaring and flare torque requirements, technique, etc.

Connect refrigerant piping

Four sides to exit the piping

Based on the position of the wall hole relative to the mounting plate, choose the side from which the piping will exit the unit. You have four options for the exit direction of the piping.

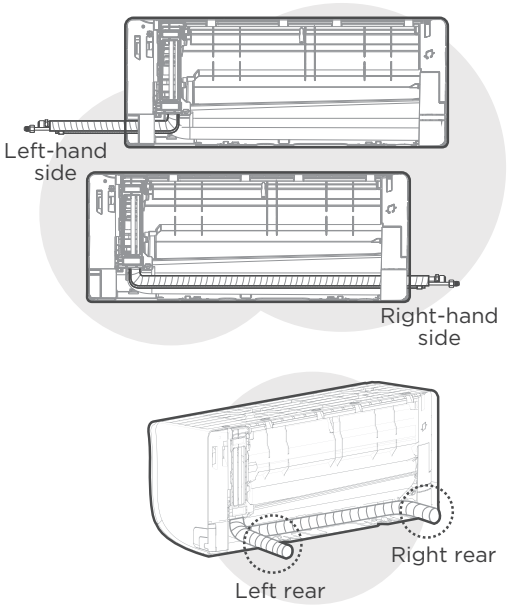

NOTE ON PIPING CONNECTING

In some locations of US, a conduit tube must be used to connect the cable. To ensure an enough space for the pipes running and the machine is against the wall after installation, It is recommended to attach the drain hose to the right-hand side (when you're facing the back of the unit).

When choose Left-hand side or Right-hand side piping, please make sure that the pipes come out horizontally so as not to affect the lower frame installation.

⚠ CAUTION

Be extremely careful not to dent or damage the piping while bending them away from the unit. Any dents in the piping will affect the unit's performance.

Connect refrigerant piping

1. Open and lift the front panel, use your thumb to pull the latches on the direction indicated by the arrows in the picture to release the latches on both sides of the frame, and then remove the bottom frame. When reinstalling the bottom frame, push the latches in the direction of the arrows, insert them into the holes as shown below to secure the frame.

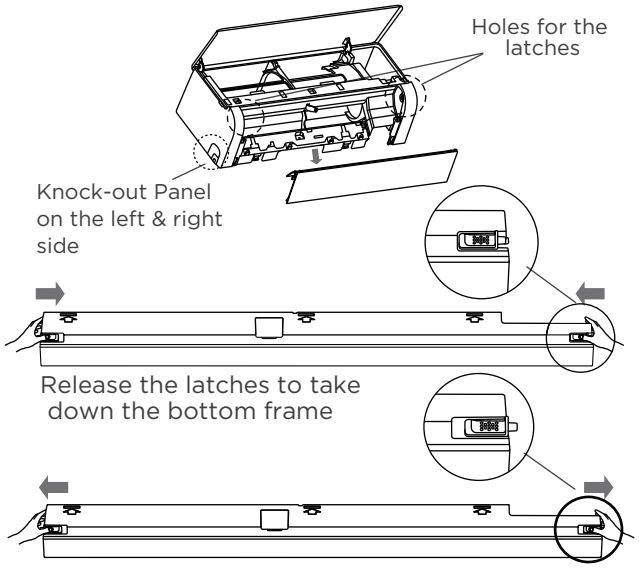

2. If the wall hole is behind the unit, keep the knock-out panel in place. If the wall hole is to the side of the indoor unit, remove the plastic knock-out panel from that side of the unit. Use pliers or scissors if the plastic panel is too difficult to remove by hand.
3. Groove has been made in the knock-out panel in order to cut it conveniently. The size of the slot is determined by the diameter of piping.
4. If existing connective piping is already embedded in the wall, proceed directly to the Connect Drain Hose step. If there is no embedded piping, connect the indoor unit's refrigerant piping to the connective piping that will join the indoor and outdoor units. Refer to the Refrigerant Piping Connection section of this manual for detailed instructions.

⚠ CAUTION

For the units adopt the following pipe connectors, please strictly perform the piping work in accordance with the following instructions.

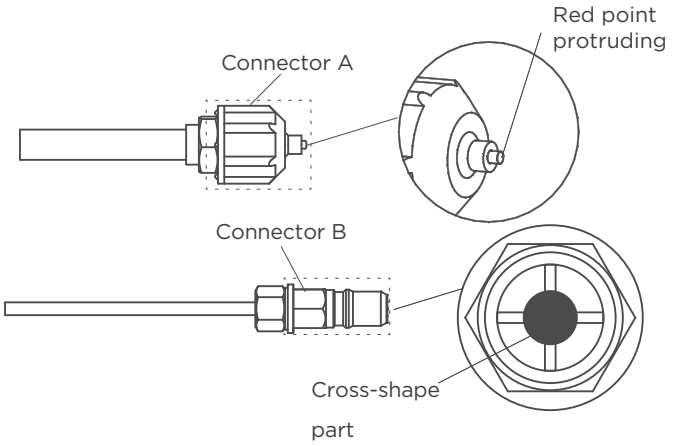

- Before performing the refrigerant piping connection, always wear work gloves and goggles, and remember that the connectors A and B are not allowed to face people directly.
- Keep pressing the cross-shape part of connector B with a tool for about 5~10 seconds until the red protuding point of connector A retracts completely.
- Remove connectors A and B, then perform the refrigerant piping connection between indoor unit and outdoor unit.

Connect drain hose

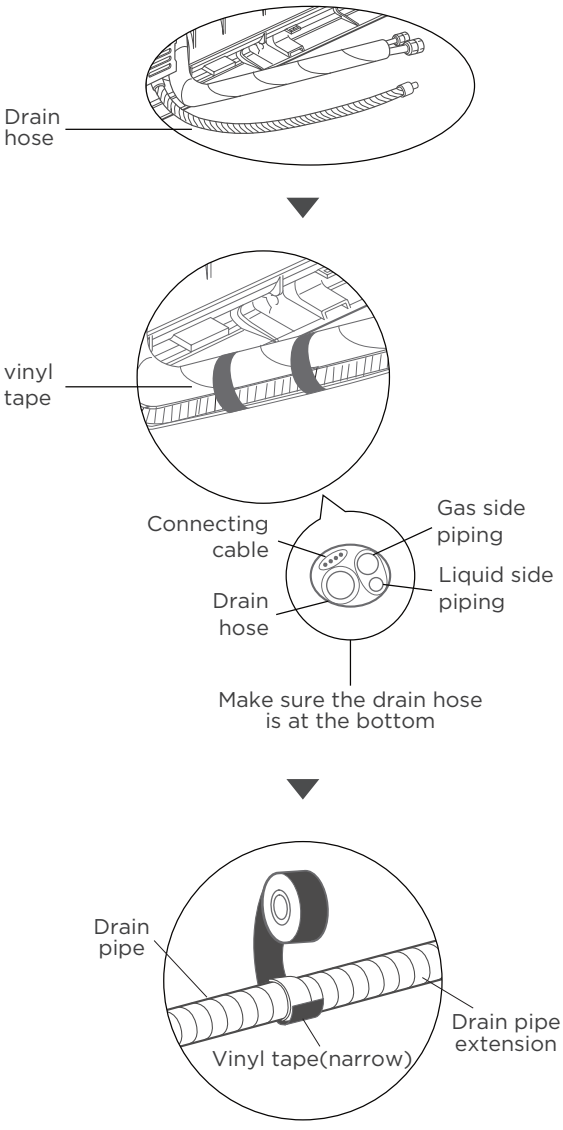

Step 1:

The drain hose can be attached to the left or right side. To ensure proper drainage, attach the drain hose on the same side that your refrigerant piping exits the unit. Attach drain hose extension (purchased separately) to the end of drain hose.

- Wrap the connection point firmly with Teflon tape to ensure a good seal and to prevent leaks.
- For the portion of the drain hose that will remain indoors, wrap it with foam pipe insulation to prevent condensation.
- Remove the air filter and pour a small amount of water into the drain pan to make sure that water flows from the unit smoothly.

⚠ CAUTION

PLUG THE UNUSED DRAIN HOLE

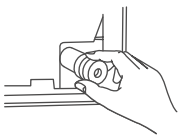

To prevent unwanted leaks you must plug the unused drain hole with the rubber plug provided.

NOTE ON DRAIN HOSE PLACEMENT

Make sure to arrange the drain hose according to the following figures.

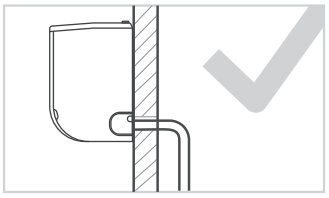

CORRECT

Make sure there are no kinks or dent in drain hose to ensure proper drainage.

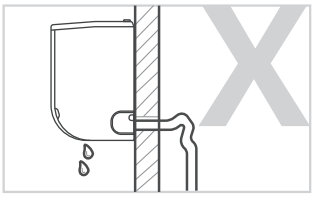

NOT CORRECT

Kinks in the drain hose will create water traps.

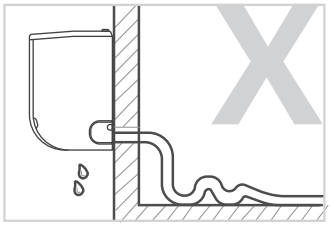

NOT CORRECT

Kinks in the drain hose will create water traps.

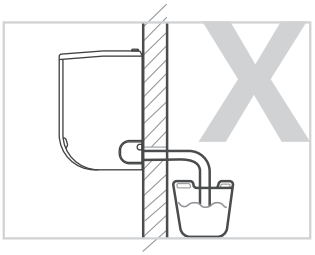

NOT CORRECT

Do not place the end of the drain hose in water or in containers that collect water. This will prevent proper drainage.

4 Electrical work preparation

⚠ WARNING

- **BEFORE PERFORMING ANY ELECTRICAL WORK, READ THESE REGULATIONS**
- **BEFORE PERFORMING ANY ELECTRLCAL OR WIRING WORK, TURN OFF THE MAIN POWER TO THE SYSTEM.**

1. All wiring must comply with local and national electrical codes, regulations and must be installed by a licensed electrician.
2. All electrical connections must be made according to the Electrical Connection Diagram located on the panels of the indoor and outdoor units.
3. If there is a serious safety issue with the power supply, stop work immediately. Explain your reasoning to the client, and refuse to install the unit until the safety issue is properly resolved.
4. If connecting power to fixed wiring, a switch or circuit breaker that disconnects all poles and has a contact separation of at least 1/8in (3mm) must be incorporated in the fixed wiring. The qualified technician must use an approved circuit breaker or switch.
5. Only connect the unit to an individual branch circuit outlet. Do not connect another appliance to that outlet.
6. Make sure to properly ground the air conditioner.
7. Every wire must be firmly connected. Loose wiring can cause the terminal to overheat, resulting in product malfunction and possible fire.
8. Do not let wires touch or rest against refrigerant tubing, the compressor, or any moving parts within the unit.
9. To avoid getting an electric shock, never touch the electrical components soon after the power supply has been turned off. After turning off the power, always wait 10 minutes or more before you touch the electrical components.
10. Power voltage should be within 90-110% of rated voltage. Insufficient power supply can cause malfunction, electrical shock, or fire.

⚠ WARNING

All wiring must be performed strictly in accordance with the wiring diagram located on the back of the Indoor Unit's front panel.

Connect signal and power cables

The signal cable enables communication between the indoor and outdoor units. You must first choose the right cable size before preparing it for connection.

Cable Types

- Indoor Power Cable (if applicable): H05VV-F or H05V2V2-F
- Outdoor Power Cable: H07RN-F or H05RN-F
- Signal Cable: H07RN-F

Minimum Cross-Sectional Area of Power and Signal Cables (For reference)

Rated Current of Appliance (A)	Nominal Cross-Sectional Area (mm^2)
> 3 and ≤6	0.75
> 6 and ≤10	1
> 10 and ≤16	1.5
> 16 and ≤25	2.5
> 25 and ≤32	4
> 32 and ≤40	6

CHOOSE THE RIGHT CABLE SIZE

The size of the power supply cable, signal cable, fuse, and switch needed is determined by the maximum current of the unit. The maximum current is indicated on the nameplate located on the side panel of the unit. Refer to this nameplate to choose the right cable, fuse, or switch.

1. Open front panel of the indoor unit.
2. Using a screwdriver, open the wire box cover on the right side of the unit. This will reveal the terminal block.
3. Unscrew the cable clamp below the terminal block and place it to the side.
4. Facing the back of the unit, remove the plastic panel on the bottom left-hand side.
5. Feed the signal wire through this slot, from the back of the unit to the front.
6. Facing the front of the unit, connect the wire according to the indoor unit's wiring diagram, connect the u-lug and firmly screw each wire to its corresponding terminal.
7. After checking to make sure every connection is secure, use the cable clamp to fasten the signal cable to the unit. Screw the cable clamp down tightly.
8. Replace the wire cover on the front of the unit, and the plastic panel on the back.

⚠ DO NOT MIX UP LIVE AND NULL WIRES
This is dangerous, and can cause the air conditioning unit to malfunction.

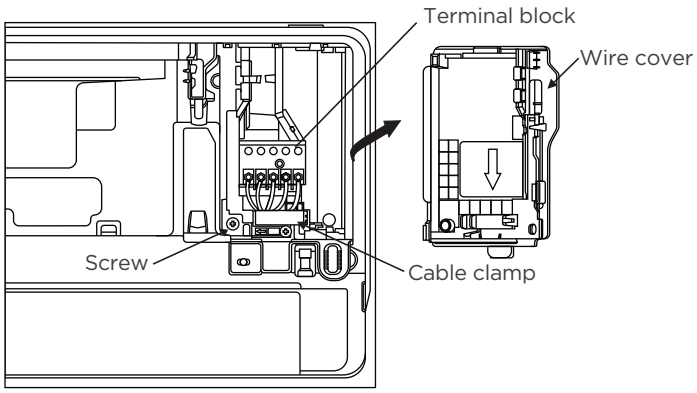

Note:
For some units that require on-site connection of power cords, it is necessary to remove the front frame first, thread the power cable through the cable-cross hole in the rat baffle at the back of the indoor unit, and then pull it out from the front side, secure it with a cable clip as shown in the following diagram.
After the power cord passes through the cable clamp, strip the wire 10mm from the end, and then connect the wire to the terminal.

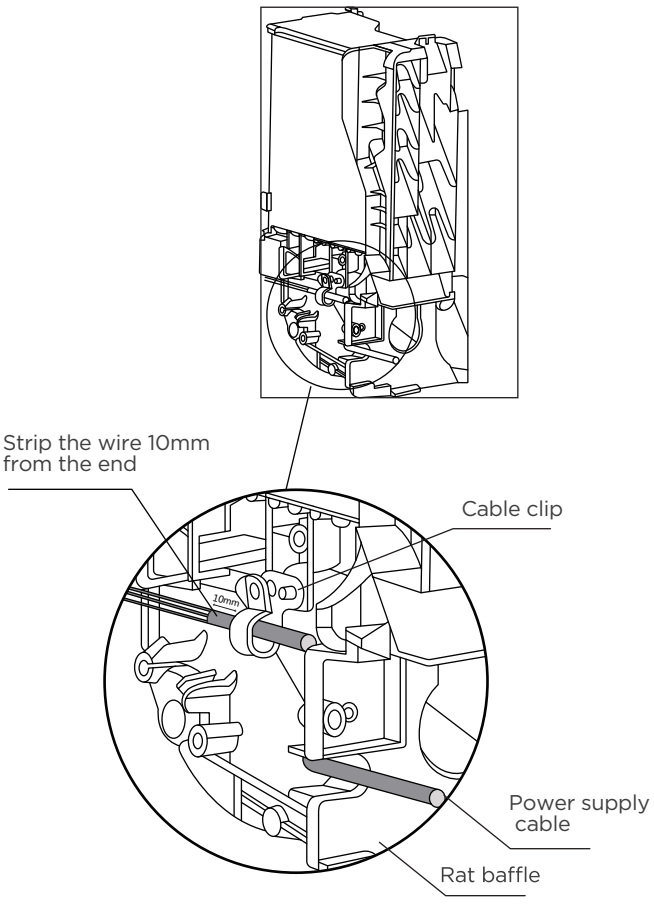

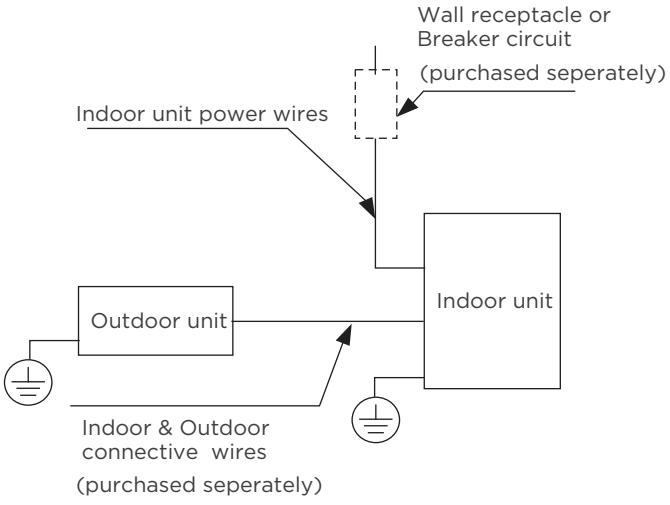

Indoor power supply models

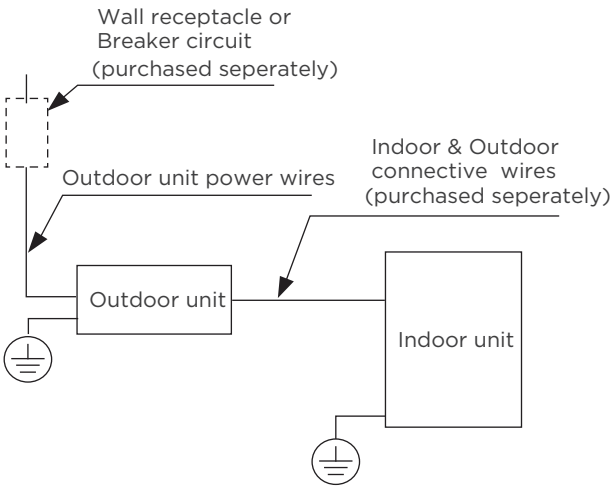

Outdoor power supply models

5 Wrap piping & Cables

NOTE

Before passing the piping, and drain hose through the wall hole, you must bundle them together to save space, protect them, and insulate them.

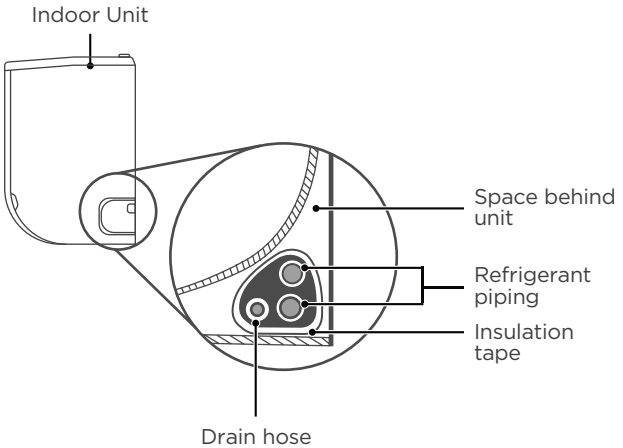

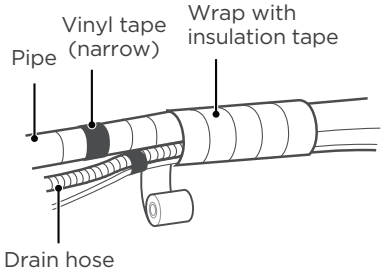

Step 1:

Bundle the drain hose, refrigerant pipes as shown above.

Step 2:

Using adhesive vinyl tape, attach the drain hose to the underside of the refrigerant pipes.

Step 3:

Using insulation tape, wrap the refrigerant pipes, and drain hose tightly together. Double-check that all items are bundled.

Step 4:

After completing the wiring and piping connection, reinstall the lower frame.

DRAIN HOSE MUST BE ON BOTTOM

Make sure that the drain hose is at the bottom of the bundle. Putting the drain hose at the top of the bundle can cause the drain pan to overflow, which can lead to fire or water damage.

DO NOT WRAP ENDS OF PIPING

When wrapping the bundle, keep the ends of the piping unwrapped. You need to access them to test for leaks at the end of the installation process (refer to Electrical Checks and Leak Checks section of this manual).

6 Mount indoor unit

If you installed new connective piping to the outdoor unit, do the following:

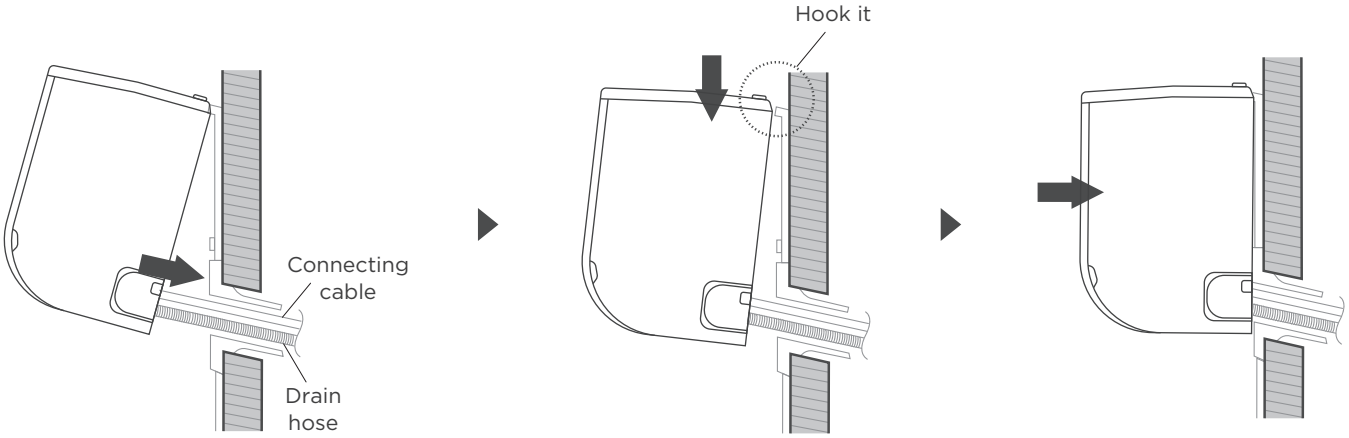

Put pipes in wall hole

Hook it and press down lightly to secure

Check that the unit is firmly mounted

- If you have already passed the refrigerant piping through the hole in the wall, proceed to Step 4.
- Otherwise, double-check that the ends of the refrigerant pipes are sealed to prevent dirt or foreign materials from entering the pipes.
- Slowly pass the wrapped bundle of refrigerant pipes, drain hose, and signal wire through the hole in the wall.
- Hook the top of the indoor unit on the upper hook of the mounting plate.
- Check that unit is hooked firmly on mounting by applying slight pressure to the left and right-hand sides of the unit. The unit should not jiggle or shift.
- Using even pressure, push down on the bottom half of the unit. Keep pushing down until the unit snaps onto the hooks along the bottom of the mounting plate.
- Again, check that the unit is firmly mounted by applying slight pressure to the left and the right-hand sides of the unit.

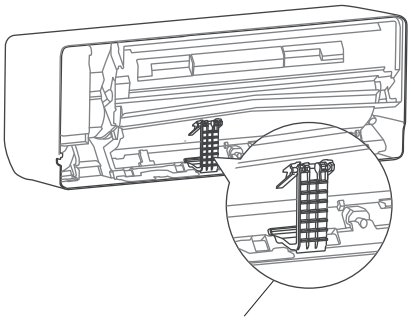

Holder at the back of the unit

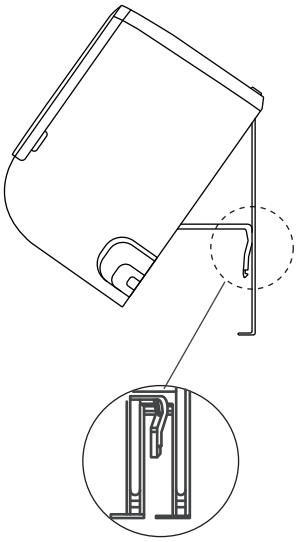

Use the holder at the back of the unit against on the mounting plate to prop up the unit

If refrigerant piping is already embedded in the wall, do the following:

- Hook the top of the indoor unit on the upper hook of the mounting plate.
- Use the holder at the back of the unit to prop up the unit, giving you enough room to connect the refrigerant piping, signal cable, and drain hose.
- Connect drain hose and refrigerant piping (refer to **Refrigerant Piping Connection** section of this manual for instructions).
- Keep pipe connection point exposed to perform the leak test (refer to **Electrical Checks** and **Leak Checks section** of this manual).
- After the leak test, wrap the connection point with insulation tape.
- Release the holder that is propping up the unit.
- Using even pressure, push down on the bottom half of the unit. Keep pushing down until the unit snaps onto the hooks along the bottom of the mounting plate.

NOTE : UNIT IS ADJUSTABLE

Keep in mind that the hooks on the mounting plate are smaller than the holes on the back of the unit. If you find that you don't have ample room to connect embedded pipes to the indoor unit, the unit can be adjusted left or right by about 50mm (1.96in), depending on the model.

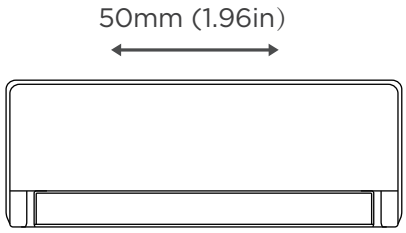

Move to left or right

Install Your Outdoor Unit

1 Select installation location

NOTE : PRIOR TO INSTALLATION

Before installing the outdoor unit, you must choose an appropriate location. The following are standards that will help you choose an appropriate location for the unit.

Proper installation locations meet the following standards:

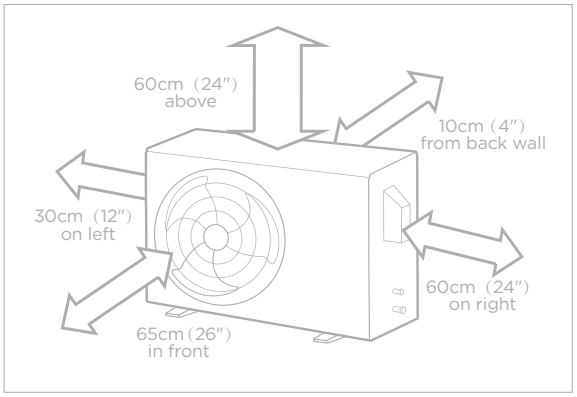

☑ Meets all spatial requirements shown in Installation Space Requirements above.



☑ Good air circulation and ventilation.



☑ Firm and solid—the location can support the unit and will not vibrate.



☑ Noise from the unit will not disturb other people.



☑ Protected from prolonged periods of direct sunlight or rain.

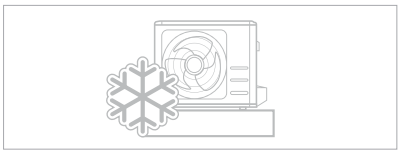

☑ Where snowfall is anticipated, take appropriate measures to prevent ice buildup and coil damage.

NOTE Install the unit by following local codes and regulations , there may be differ slightly between different regions.

⚠ CAUTION:

SPECIAL CONSIDERATIONS FOR EXTREME WEATHER

If the unit is exposed to heavy wind:

Install unit so that air outlet fan is at a 90° angle to the direction of the wind. If needed, build a barrier in front of the unit to protect it from extremely heavy winds. See Figures below.

If the unit is frequently exposed to heavy rain or snow:

Build a shelter above the unit to protect it from the rain or snow. Be careful not to obstruct air flow around the unit.

If the unit is frequently exposed to salty air(seaside):

Use outdoor unit that is specially designed to resist corrosion.

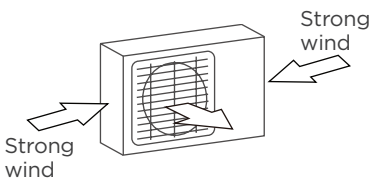

90° angle to the direction of the wind

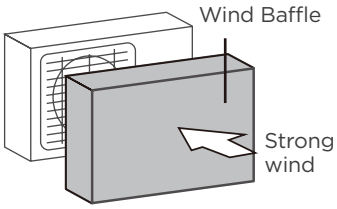

Build a wind Baffle to protect the unit

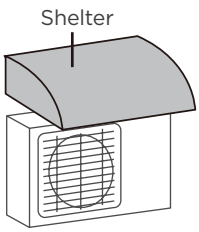

Build a shelter to protect the unit

DO NOT install unit in the following locations:

- ⊘ Near an obstacle that will block air inlets and outlets.
- ⊘ Near a public street, crowded areas, or where noise from the unit will disturb others.
- ⊘ Near animals or plants that will be harmed by hot air discharge.
- ⊘ Near any source of combustible gas.
- ⊘ In a location that is exposed to large amounts of dust
- ⊘ In a location exposed to a excessive amounts of salty air.

2 Install drain joint(Heat pump unit only)

NOTE : PRIOR TO INSTALLATION

Before bolting the outdoor unit in place, you must install the drain joint at the bottom of the unit. For the units with base pan built-in with multiple holes for proper draining during defrost, the drain joint is no need to be installed.

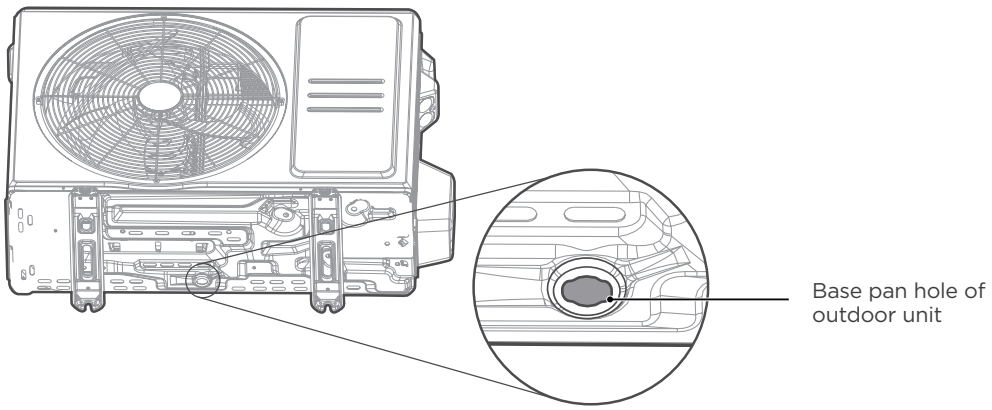

Step 1:

Find out the base pan hole of outdoor unit.

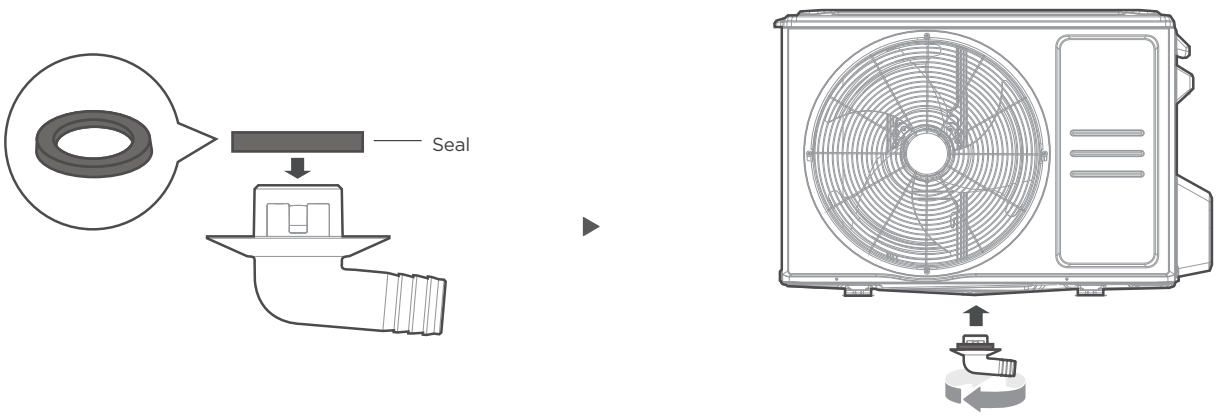

Step 2:

- Fit the rubber seal on the end of the drain joint that will connect to the outdoor unit.
- Insert the drain joint into the hole in the base pan of the unit. The drain joint will click in place.
- Connect a drain hose extension (not included) to the drain joint to redirect water from the unit during heating mode.

NOTE : IN COLD CLIMATES

In cold climates, make sure that the drain hose is as vertical as possible to ensure swift water drainage. If water drains too slowly, it can freeze in the hose and flood the unit.

3 Anchor Outdoor Unit

⚠ WARNING

WHEN DRILLING INTO CONCRETE, EYE PROTECTION IS RECOMMENDED AT ALL TIME.

- The outdoor unit can be anchored to the ground or to a wall-mounted bracket with bolt(M10). Prepare the installation base of the unit according to the dimensions below.
- The following is a list of different outdoor unit sizes and the distance between their mounting feet. Prepare the installation base of the unit according to the dimensions below.

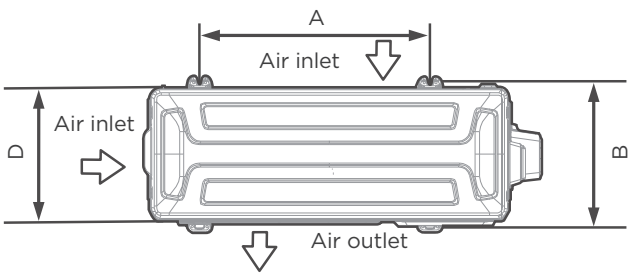

Top view

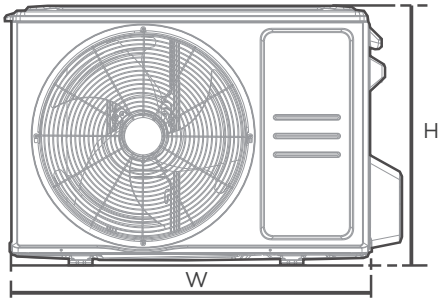

Front view

Outdoor Unit Dimensions (mm) W x H x D	Mounting Dimensions	
	Distance A (mm)	Distance B (mm)
668x469x252 (26.3”x 18.5”x 9.9”)	430 (16.9”)	231 (9.1”)
680x542x248 (26.8”x 21.3”x 9.8”)	452 (17.8”)	230 (9.1”)
720x495x270 (28.3”x 19.5”x 10.6”)	452 (17.8”)	255 (10.0”)
765x555x303 (30.1”x 21.8”x 11.9”)	452 (17.8”)	286(11.3”)
805x554x330 (31.7”x 21.8”x 12.9”)	511 (20.1”)	317 (12.5”)
890x673x342 (35.0”x 26.5”x 13.5”)	663 (26.1”)	354 (13.9”)
946x810x420 (37.2”x 31.9”x 16.5”)	673 (26.5”)	403 (15.9”)
946x810x410 (37.2”x 31.9”x 16.1”)	673 (26.5”)	403 (15.9”)

If you will install the unit on the ground or on a concrete mounting platform, do the following:

- Mark the positions for four expansion bolts based on dimensions chart.
- Pre-drill holes for expansion bolts.
- Place a nut on the end of each expansion bolt.
- Hammer expansion bolts into the pre-drilled holes.
- Remove the nuts from expansion bolts, and place outdoor unit on bolts.
- Put washer on each expansion bolt, the replace the nuts.
- Using a wrench, tighten each nut until snug.

If you will install the unit on a wall-mounted bracket , do the following:

- Mark the position of bracket holes based on dimensions chart.
- Pre-drill the holes for the expansion bolts.
- Place a washer and nut on the end of each expansion bolt.
- Thread expansion bolts through holes in mounting brackets, put mounting brackets in position, and hammer expansion bolts into the wall.
- Check that the mounting brackets are level.
- Carefully lift unit and place its mounting feet on brackets.
- Bolt the unit firmly to the brackets.
- If allowed, install the unit with rubber gaskets to reduce vibrations and noise.

⚠ CAUTION

Make sure that the wall is made of solid brick, concrete, or of similarly strong material. The wall must be able to support at least four times the weight of the unit.

4 Connect signal and power cables

⚠ WARNING - Before the Operation

- ALL WIRING WORK MUST BE PERFORMED STRICTLY IN ACCORDANCE WITH THE WIRING DIAGRAM LOCATED INSIDE OF WIRE COVER OF THE OUTDOOR UNIT.
- BEFORE PERFORMING ANY ELECTRICAL OR WIRING WORK,TURN OFF THE MAIN POWER TO THE SYSTEM.

Choose the right cable size

The size of the power supply cable, signal cable, fuse, and switch needed is determined by the maximum current of the unit. The maximum current is indicated on the nameplate located on the side panel of the unit.
Please choose the right cable according to the “Cable types” in page 26.

- Using wire strippers, strip the rubber jacket from both ends of cable to reveal about 40mm (1.57in) of the wires inside.
- Strip the insulation from the ends of the wires.
- Using a wire crimper, crimp u-lugs on the ends of the wires.

Pay attention to live wire

While crimping wires, make sure you clearly distinguish the Live (“L”) Wire from other wires.

The outside unit’s terminal block is protected by an electrical wiring cover on the side of the unit. A comprehensive wiring diagram is sticked on the inside of the wiring cover.

- Unscrew the electrical wiring cover and remove it.
- Unscrew the cable clamp below the terminal block and place it to the side.
- Connect the wire according to the wiring diagram, and firmly screw the u-lug of each wire to its corresponding terminal.
- After checking to make sure every connection is secure, loop the wires around to prevent rain water from flowing into the terminal.
- Using the cable clamp, fasten the cable to the unit. Screw the cable clamp down tightly.
- Insulate unused wires with PVC electrical tape. Arrange them so that they do not touch any electrical or metal parts.
- Replace the wire cover on the side of the unit, and screw it in place.

NOTE: The unit you purchased may be slightly different.The illustrations are for explanatory purposes. The actual shape shall prevail.

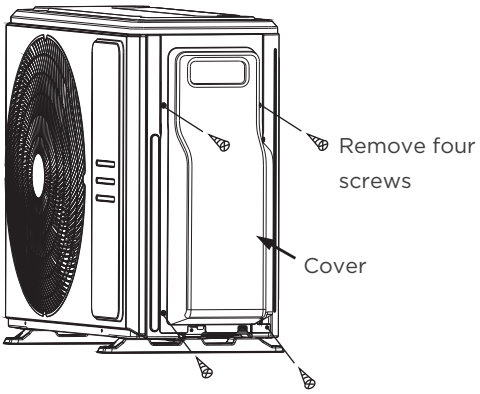

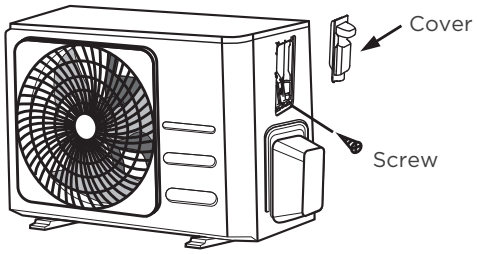

NOTE: If the cable clamp looks like the following, please select the appropriate through-hole according to the diameter of the wire.

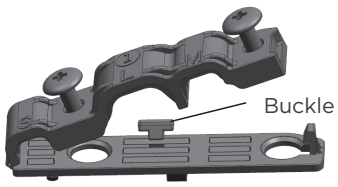

Three size hole: Small, Large, Medium

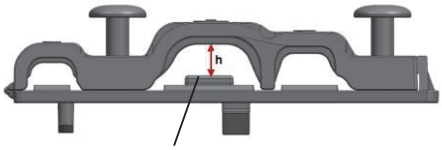

When the calbe is not fasten enough, use the buckle to prop it up , so it can be clamped tightly.

Refrigerant Piping Connection

1 Piping Connection Instructions

⚠ WARNING

WHEN CONNECTING REFRIGERANT PIPING, **DO NOT** LET SUBSTANCES OR GASES OTHER THAN THE SPECIFIED REFRIGERANT ENTER THE UNIT. THE PRESENCE OF OTHER GASES OR SUBSTANCES WILL LOWER THE UNIT'S CAPACITY, AND CAN CAUSE ABNORMALLY HIGH PRESSURE IN THE REFRIGERATION CYCLE. THIS CAN CAUSE EXPLOSION AND INJURY.

Note on Pipe Length

The length of refrigerant piping will affect the performance and energy efficiency of the unit. Nominal efficiency is tested on units with a pipe length of 5 meters (16.5ft). A minimum pipe run of 3 metres is required to minimise vibration & excessive noise.

Maximum Length and Drop Height of Refrigerant Piping per Unit Model

Model	Capacity (BTU/h)	Max. Length (m)	Max. Drop Height (m)
R410A,R32 Inverter Split Air Conditioner	< 15,000	25 (82ft)	10 (33ft)
	≥ 15,000 and < 24,000	30 (98.5ft)	20 (66ft)
	≥ 24,000 and < 36,000	50 (164ft)	25 (82ft)
	≥ 36,000 and < 60,000	65 (213ft)	30 (98.5ft)
R410A, R32 Fixed-speed Split Air Conditioner	< 18,000	20 (66ft)	8(26ft)
	≥ 18,000 and < 36,000	25 (82ft)	10(33ft)
	≥ 36,000 and < 60,000	30 (98.5ft)	15 (49ft)

Connection Instructions – Refrigerant Piping

Step 1: Cut pipes

When preparing refrigerant pipes, take extra care to cut and flare them properly. This will ensure efficient operation and minimize the need for future maintenance.

- Measure the distance between the indoor and outdoor units.
- Using a pipe cutter, cut the pipe a little longer than the measured distance.
- Make sure that the pipe is cut at a perfect 90° angle.

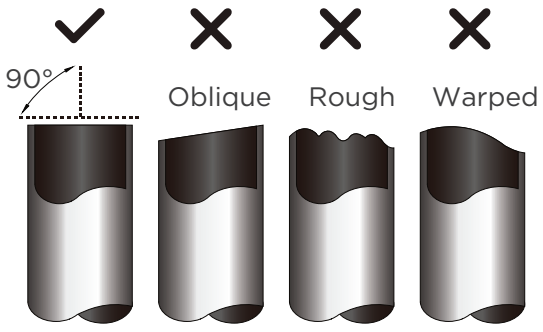

⊘ DO NOT DEFORM PIPE WHILE CUTTING

Be extra careful not to damage, dent, or deform the pipe while cutting. This will drastically reduce the heating efficiency of the unit.

⚠ CAUTION

MUST BE CHECK OVER THE END OF THE PIPE FOR CRACKS AND EVEN FLARING. ENSURE THE PIPE IS SEALED.

Step 2: Remove burrs

Burrs can affect the air-tight seal of refrigerant piping connection. They must be completely removed.

- Hold the pipe at a downward angle to prevent burrs from falling into the pipe.
- Using a reamer or deburring tool, remove all burrs from the cut section of the pipe.

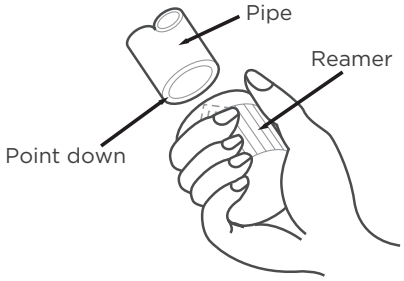

Step 3: Flare pipe ends

Proper flaring is essential to achieve an airtight seal.

- After removing burrs from cut pipe, seal the ends with PVC tape to prevent foreign materials from entering the pipe.
- Sheath the pipe with insulating material.
- Place flare nuts on both ends of pipe. Make sure they are facing in the right direction, because you can't put them on or change their direction after flaring.

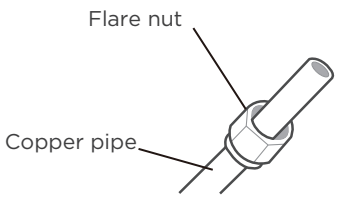

- Remove PVC tape from ends of pipe when ready to perform flaring work.
- Clamp flare form on the end of the pipe. The end of the pipe must extend beyond the edge of the flare form in accordance with the dimensions shown in the table below.

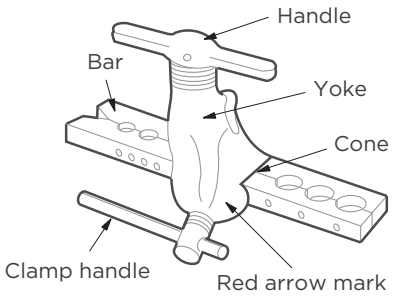

PIPING EXTENSION BEYOND FLARE FORM

Outer Diameter of Pipe (mm)	A (mm)	
	Min.	Max.
Ø 6.35 (Ø 1/4")	0.7 (0.0275")	1.3 (0.05")
Ø 9.52 (Ø 3/8")	1.0 (0.04")	1.6 (0.063")
Ø12.7 (Ø 1/2")	1.0 (0.04")	1.8 (0.07")
Ø 16 (Ø 5/8")	2.0 (0.078")	2.2 (0.086")
Ø 19 (Ø 3/4")	2.0 (0.078")	2.4 (0.094")

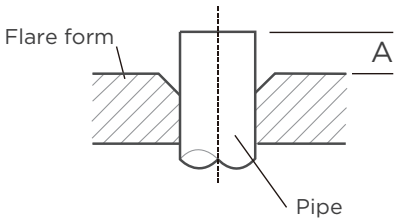

- Place flaring tool onto the form.
- Turn the handle of the flaring tool clockwise until the pipe is fully flared.
- Remove the flaring tool and flare form, then inspect the end of the pipe for cracks and even flaring.

Step 4: Connect pipes

NOTE: When connecting refrigerant pipes, be careful not to use excessive torque or to deform the piping in any way. You should first connect the low-pressure pipe, then the high-pressure pipe.

MINIMUM BEND RADIUS

When bending connective refrigerant piping, the minimum bending radius is 10cm.

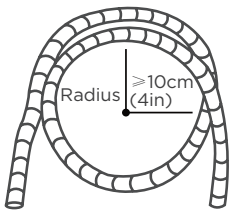

2 Connecting Piping to Indoor Unit

Instructions for Connecting Piping to Indoor Unit

Step 1:

- Align the center of the two pipes that you will connect.

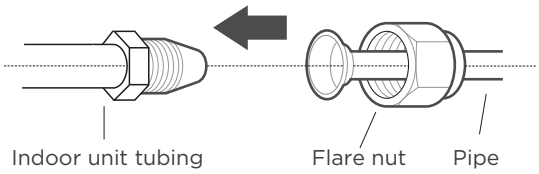

Step 2:

- Tighten the flare nut as tightly as possible by hand.
- Using a spanner, grip the nut on the unit tubing.
- While firmly gripping the nut on the unit tubing, use a torque wrench to tighten the flare nut according to the torque values in the Torque Requirements table below. Loosen the flaring nut slightly, then tighten again.

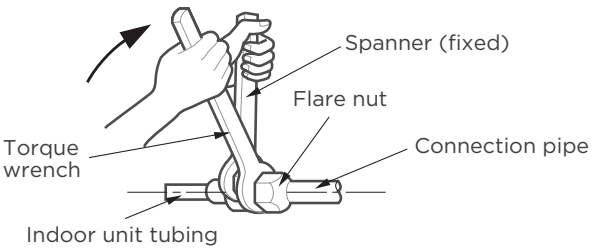

TORQUE REQUIREMENTS

Outer Diameter of Pipe(mm)	Tightening Torque(N·m)	Flare dimension(B)(mm)	Flare shape
Ø 6.35 (Ø 1/4")	18~20(180~200kgf.cm)	8.4~8.7 (0.33~0.34")	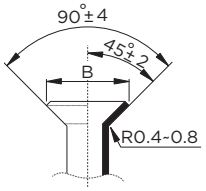
Ø 9.52 (Ø 3/8")	32~39(320~390kgf.cm)	13.2~13.5 (0.52~0.53")	
Ø 12.7 (Ø 1/2")	49~59(490~590kgf.cm)	16.2~16.5 (0.64~0.65")	
Ø 16 (Ø 5/8")	57~71(570~710kgf.cm)	19.2~19.7 (0.76~0.78")	
Ø 19 (Ø 3/4")	67~101(670~1010kgf.cm)	23.2~23.7 (0.91~0.93")	

⊘ DO NOT USE EXCESSIVE TORQUE

Excessive force can break the nut or damage the refrigerant piping. You must not exceed torque requirements shown in the table above.

3 Connecting Piping to Outdoor Unit

NOTE

This section still needs to be operated according to the **TORQUE REQUIREMENTS** chart on the previous page.

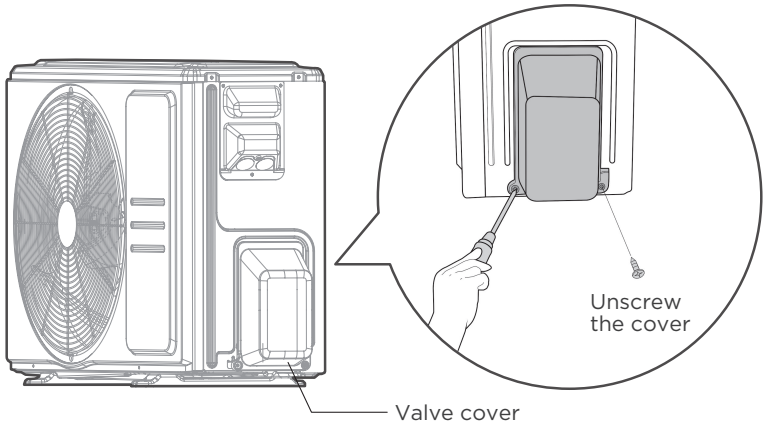

1. Unscrew the cover from the packed valve on the side of the outdoor unit.
2. Remove protective caps from ends of valves.
3. Align flared pipe end with each valve, and tighten the flare nut as tightly as possible by hand.
4. Using a spanner, grip the body of the valve. **Do not** grip the nut that seals the service valve.

USE SPANNER TO GRIP MAIN BODY OF VALVE

Torque from tightening the flare nut can snap off other parts of valve.

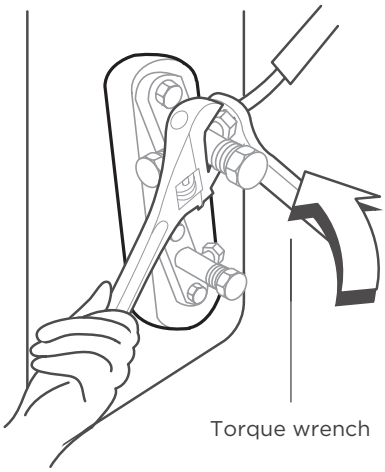

5. While firmly gripping the body of the valve, use a torque wrench to tighten the flare nut according to the correct torque values.
6. Loosen the flaring nut slightly, then tighten again.
7. Repeat Steps 3 to 6 for the remaining pipe.

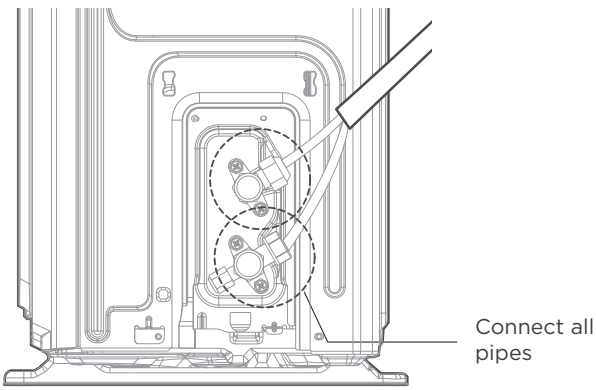

Air Evacuation

NOTE : PREPARATIONS AND PRECAUTIONS

Air and foreign matter in the refrigerant circuit can cause abnormal rises in pressure, which can damage the air conditioner, reduce its efficiency, and cause injury. Ensure to evacuate the air inside the indoor unit and pipes with vacuum pump. Use a vacuum pump and manifold gauge to evacuate the refrigerant circuit, removing any non-condensable gas and moisture from the system. Evacuation should be performed upon initial installation and when unit is relocated. Incorrect installation due to ignoring of the Instruction will cause serious problem to the machine.

BEFORE PERFORMING EVACUATION

- ☑ Make sure the connective pipes between the indoor and outdoor units are connected properly.
- ☑ Check to make sure all wiring is connected properly.

Evacuation Instructions

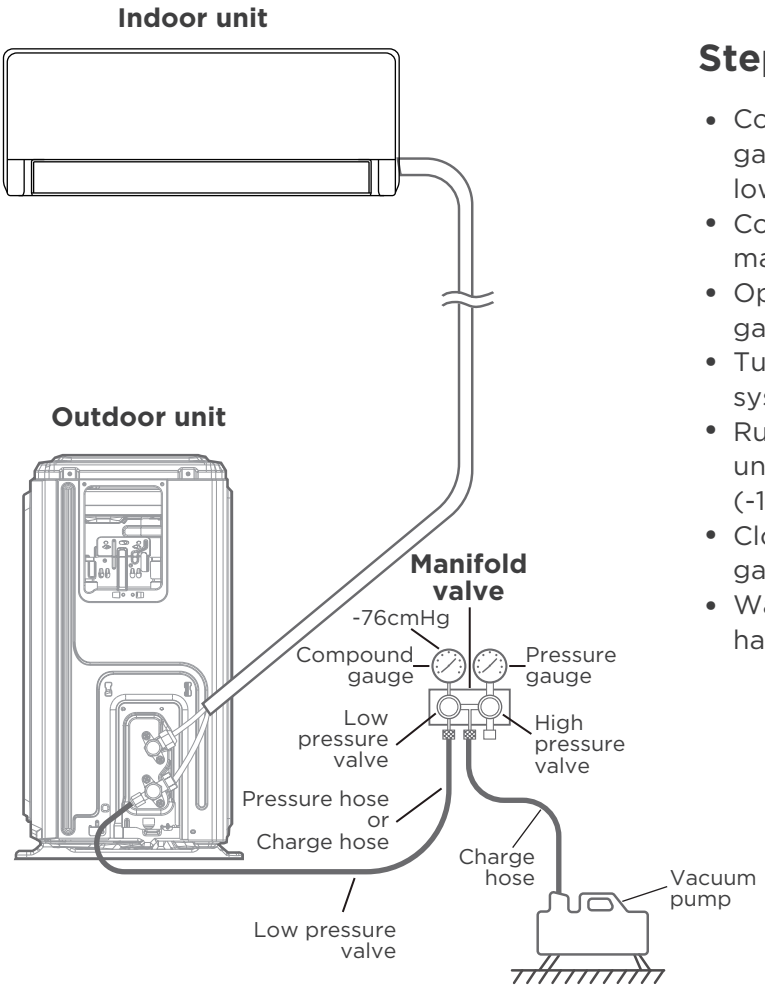

Step 1:

- Connect the charge hose of the manifold gauge to service port on the outdoor unit's low pressure valve.
- Connect another charge hose from the manifold gauge to the vacuum pump.
- Open the Low Pressure side of the manifold gauge. Keep the High Pressure side closed.
- Turn on the vacuum pump to evacuate the system.
- Run the vacuum for at least 15 minutes, or until the Compound Meter reads -76cmHG (-10^5Pa).
- Close the Low Pressure side of the manifold gauge, and turn off the vacuum pump.
- Wait for 5 minutes, then check that there has been no change in system pressure.

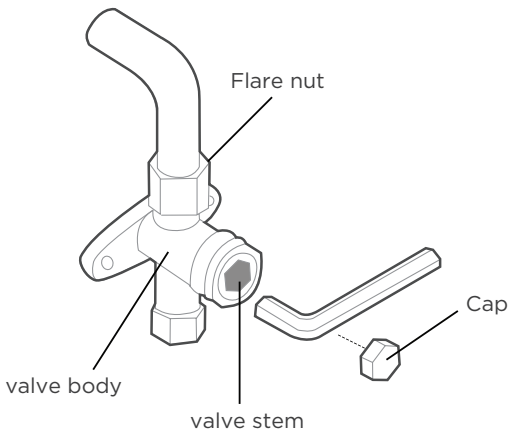

Step 2:

- If there is a change in system pressure, refer to Gas Leak Check section for information on how to check for leaks. If there is no change in system pressure, unscrew the cap
- from the packed valve (high pressure valve). Insert hexagonal wrench into the packed valve(high pressure valve) and open the valve by turning the wrench in a 1/4 counterclockwise turn. Listen for gas to exit the system, then close the valve after 5 seconds.
- Watch the Pressure Gauge for one minute to make sure that there is no change in pressure. The Pressure Gauge should read slightly higher than atmospheric pressure.
- Remove the charge hose from the service port.
- Using hexagonal wrench, fully open both the high pressure and low pressure valves.
- Tighten valve caps on all three valves (service port, high pressure, low pressure) by hand. You may tighten it further using a torque wrench if needed.

OPEN VALVE STEMS GENTLY

Ensure to open all the valves after evacuation. When opening valve stems, turn the hexagonal wrench until it hits against the stopper. Do not try to force the valve to open further.

NOTE ON ADDING REFRIGERANT

Some systems require additional charging depending on pipe lengths. The standard pipe length is 5m (16'). The refrigerant should be charged from the service port on the outdoor unit's low pressure valve. The additional refrigerant to be charged can be calculated using the following formula:

ADDITIONAL REFRIGERANT PER PIPE LENGTH

Connective Pipe Length (m)	Air Purging Method	Additional Refrigerant	
⩽ Standard pipe length	Vacuum Pump	N/A	
> Standard pipe length	Vacuum Pump	Liquid Side: Ø 6.35 (1/4") R410A: (Pipe length – standard length) x 15g/m (Pipe length – standard length) x 0.16oZ/ft R32: (Pipe length – standard length) x 12g/m (Pipe length – standard length) x 0.13oZ/ft	Liquid Side: Ø 9.52 (3/8") R410A: (Pipe length – standard length) x 30g/m (Pipe length – standard length) x 0.32oZ/ft R32: (Pipe length – standard length) x 24g/m (Pipe length – standard length) x 0.26oZ/ft

DO NOT MIX REFRIGERANT TYPES.

Electrical and Gas Leak Checks

⚠ WARNING - RISK OF ELECTRIC SHOCK

ALL WIRING MUST COMPLY WITH LOCAL AND NATIONAL ELECTRICAL CODES, AND MUST BE NSTALLED BY A LICENSED ELECTRICIAN.

BEFORE TEST RUN

Only perform test run after you have completed the following steps:

- Electrical Safety Checks – Confirm that the unit's electrical system is safe and operating properly
- Gas Leak Checks – Check all flare nut connections and confirm that the system is not leaking
- Confirm that gas and liquid (high and low pressure) valves are fully open

Electrical Safety Checks

After installation, confirm that all electrical wiring is installed in accordance with local and national regulations, and according to the Installation Manual.

BEFORE TEST RUN

Check Grounding Work

Measure grounding resistance by visual detection and with grounding resistance tester.

DURING TEST RUN

Check for Electrical Leakage

During the **Test Run**, use an electroprobe and multimeter to perform a comprehensive electrical leakage test.

If electrical leakage is detected, turn off the unit immediately and call a licensed electrician to find and resolve the cause of the leakage.

Note: This may not be required for some locations in North America.

Gas Leak Checks

There are two different methods to check for gas leaks.

Soap and Water Method

Using a soft brush, apply soapy water or liquid detergent to all pipe connection points on the indoor unit and outdoor unit. The presence of bubbles indicates a leak.

Leak Detector Method

If using leak detector, refer to the device's operation manual for proper usage instructions.

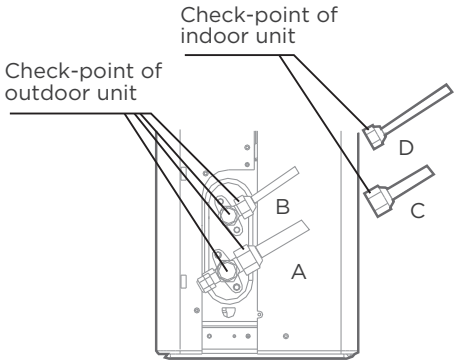

A: Low pressure stop valve
B: High pressure stop valve
C & D: Indoor unit flare nuts

AFTER PERFORMING GAS LEAK CHECKS

After confirming that the all pipe connection points DO NOT leak, replace the valve cover on the outside unit.

Test Run

Test Run Instructions

You should perform the **Test Run** for at least 30 minutes.

- Connect power to the unit.
- Press the **ON/OFF** button on the remote controller to turn it on.
- Press the **MODE** button to scroll through the following functions, one at a time:
  - COOL–Select lowest possible temperature
  - HEAT–Select highest possible temperature
- Let each function run for 5 minutes, and perform the following checks:

List of Checks to Perform	PASS/FAIL	
No electrical leakage		
Unit is properly grounded		
All electrical terminals properly covered		
Indoor and outdoor units are solidly installed		
All pipe connection points do not leak	Outdoor (2):	Indoor (2):
Water drains properly from drain hose		
All piping is properly insulated		
Unit performs COOL function properly		
Unit performs HEAT function properly		
Indoor unit louvers rotate properly		
Indoor unit responds to remote controller		

DOUBLE-CHECK PIPE CONNECTIONS

During operation, the pressure of the refrigerant circuit will increase. This may reveal leaks that were not present during your initial leak check. Take time during the Test Run to double-check that all refrigerant pipe connection points do not have leaks. Refer to **Gas Leak Check** section for instructions.

- After the Test Run is successfully completed, and you confirm that all checks points in List of Checks to Perform have PASSED, do the following:
  a. Using remote control, return unit to normal operating temperature.
  b. Using insulation tape, wrap the indoor refrigerant pipe connections that you left uncovered during the indoor unit installation process.

IF AMBIENT TEMPERATURE IS BELOW 16°C(60°F)

You can't use the remote controller to turn on the COOL function when the ambient temperature is below 16°C (60°F). In this instance, you can use the **MANUAL CONTROL** button to test the COOL function.

- Lift the front panel and raise it until it clicks in place.
- The **MANUAL CONTROL** button is located on the right-hand side of the electriacal control box. Press two times to select cool mode.
- Perform Test Run as normal.

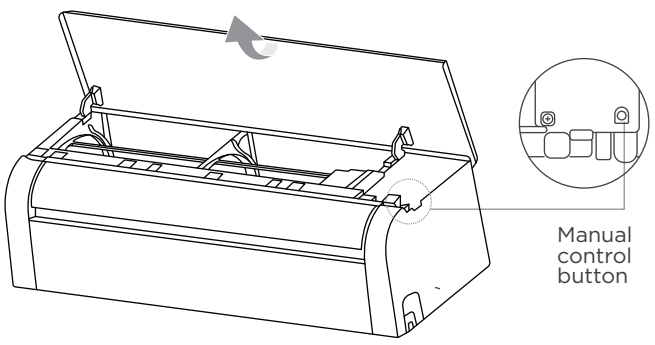

Remote Controller Specifications

Model	RG10E5(B2S)/BGEF, RG10E8(B2S)/BGEF
Rated Voltage	3.0V(Dry batteries R03/LR03×2)
Signal Receiving Range	8m
Environment	-5°C~60°C(23°F~140°F)

Quick Start Guide

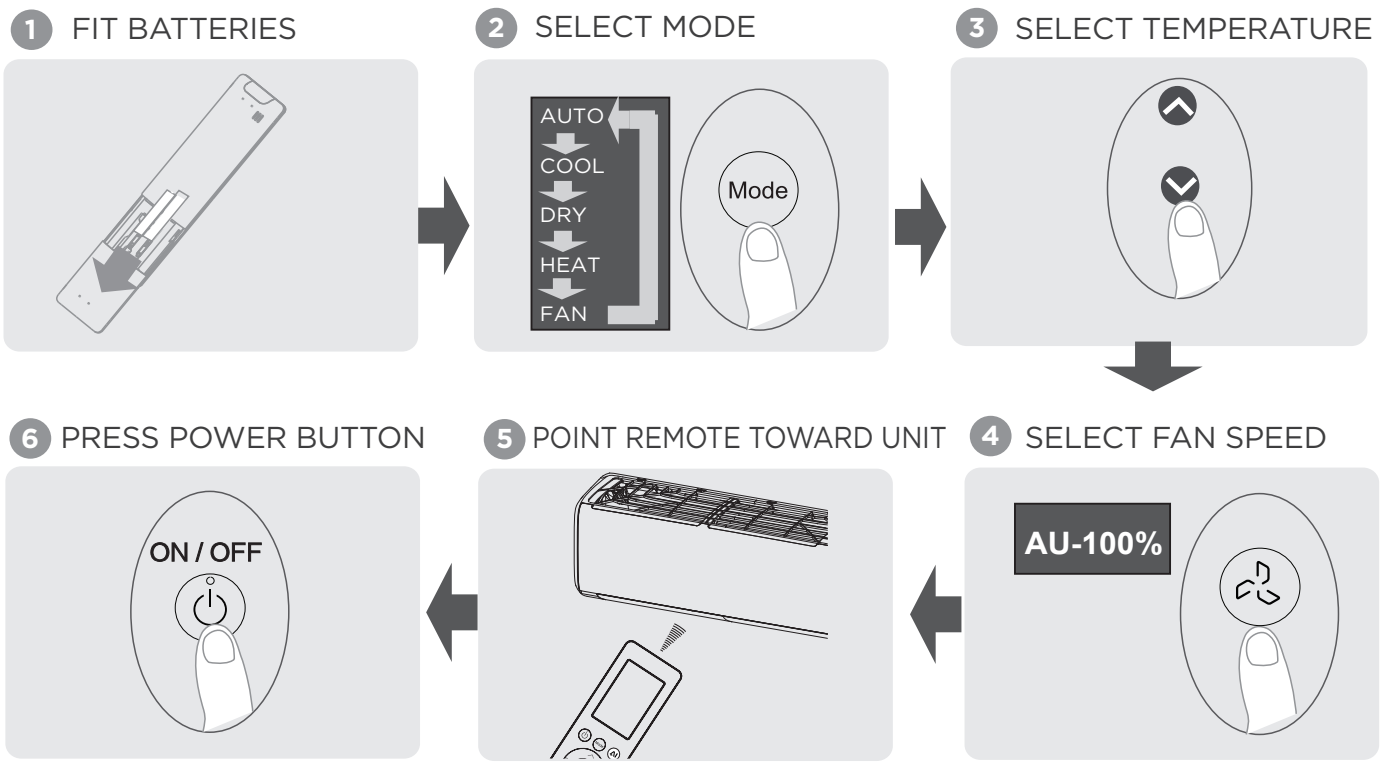

NOT SURE WHAT A FUNCTION DOES?
Refer to the How to Use Basic Functions and How to Use Advanced Functions sections of this manual for a detailed description of how to use your air conditioner.

SPECIAL NOTE

- Button designs on your unit may differ slightly from the example shown.
- If the indoor unit does not have a particular function, pressing that function's button on the remote control will have no effect.
- When there are wide differences between "Remote controller Manual" and "USER'S MANUAL" on function description, the description of "USER'S MANUAL" shall prevail.

Handling the Remote Controller

Inserting and Replacing Batteries

Your air conditioning unit may come with two batteries (some units). Put the batteries in the remote control before use.

1. Slide the back cover from the remote control downward, exposing the battery compartment.
2. Insert the batteries, paying attention to match up the (+) and (-) ends of the batteries with the symbols inside the battery compartment.
3. Slide the battery cover back into place.

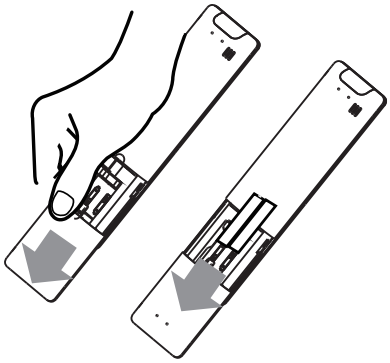

Remote Control

- Direct sunlight can interfere with the infrared signal receiver.
- There must be a clear line of sight between the remote and the appliance.
- If the signals from the remote control happen to control another appliance, move the appliance to another location or contact customer service.

Battery Disposal

- Do not dispose of batteries as unsorted municipal waste. Refer to local laws for proper disposal of batteries.
- Batteries may have a chemical symbol at the bottom of the disposal icon. This chemical symbol means that the battery contains a heavy metal that exceeds a certain concentration.
- An example is Pb: Lead (>0.004%).
- Appliances and used batteries must be treated in a specialized facility for reuse, recycling and recovery. By ensuring correct disposal, you will help avoid possible negative consequences for the environment and human health.



Battery Performance

For optimal product performance:

- Do not mix old and new batteries, or batteries of different brands.
- Do not leave batteries in the remote control if you don't plan on using the device for more than 2 months.

Notes For Using Remote Control

The device could comply with the local national regulations.

- In Canada, it should comply with CAN ICES-3(B)/NMB-3(B).
- In USA, this device complies with part 15 of the FCC Rules. Operation is subject to the following two conditions:
  (1) This device may not cause harmful interference, and
  (2) This device must accept any interference received, including interference that may cause undesired operation.

This equipment has been tested and found to comply with the limits for a Class B digital device, pursuant to part 15 of the FCC Rules. These limits are designed to provide reasonable protection against harmful interference in a residential installation. This equipment generates, uses and can radiate radio frequency energy and, if not installed and used in accordance with the instructions, may cause harmful interference to radio communications. However, there is no guarantee that interference will not occur in a particular installation. If this equipment does cause harmful interference to radio or television reception, which can be determined by turning the equipment off and on, the user is encouraged to try to correct the interference by one or more of the following measures:

- Reorient or relocate the receiving antenna.
- Increase the separation between the equipment and receiver.
- Connect the equipment into an outlet on a circuit different from that to which the receiver is connected.
- Consult the dealer or an experienced radio/TV technician for help.
- Changes or modifications not approved by the party responsible for compliance could void user's authority to operate the equipment.

Buttons and Functions

Before you begin using your new air conditioner, make sure to familiarize yourself with its remote control. The following is a brief introduction to the remote control itself. For instructions on how to operate your air conditioner, refer to the **How to Use Basic Functions section of this manual.**

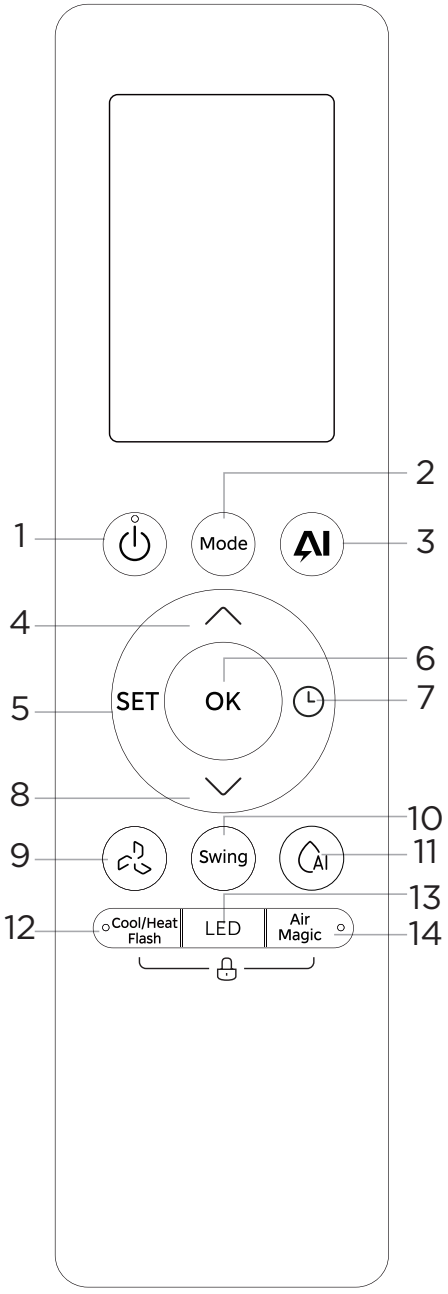

Model: RG10E5(B2S)/BGEF

	Description
1	**ON/OFF:** Turn the unit on or off.
2	**Mode**: Auto > Cool > Dry > Heat > Fan
3	**ECOMASTER** : Starts and stops the energy saving operation.
4	**Temp Up**: Increases temperature in 1°C (1°F) increments. Max. temperature is 30°C (86°F). NOTE: Press together ^ & v buttons at the same time for 3 seconds will alternate the temperature display between the °C & °F
5	**SET:** Follow Me > Active clean > AP mode * > Sleep > Breeze away [*]: Model dependent
6	**OK**: Used to confirm the selected functions
7	**Timer**: Set timer to turn unit on or off.
8	**Temp Down**: Decreases temperature in 1°C (1°F) increments. Min. temperature is 16°C (60°F).
9	**Fan Speed**: AU > 20% >40% > 60% > 80% > 100%. Press the TEMP ^ or v button to increase/decrease the fan speed in 1% increments.
10	**Swing**: Starts and stops the horizontal louver movement. Hold down for 2 seconds to initiate vertical louver auto swing feature (some units).
11	**Intelligent Humidity Control**: Used to maintain a comfortable humidity during cooling operation.
12	**Cool/Heat Flash:** Reduce (cool mode) or raise (heat mode) temperature in a short time.
13	**LED:** Turns LED display & air conditioner buzzer on and off.
14	**Air Magic:** Used to initiate the Ion/UV lamp feature.
15	**Lock:** Press together Cool/Heat Flash and Air Magic buttons simultaneously for 5 seconds to lock the keyboard. Press together these two buttons for 2 seconds to unlock the keyboard.

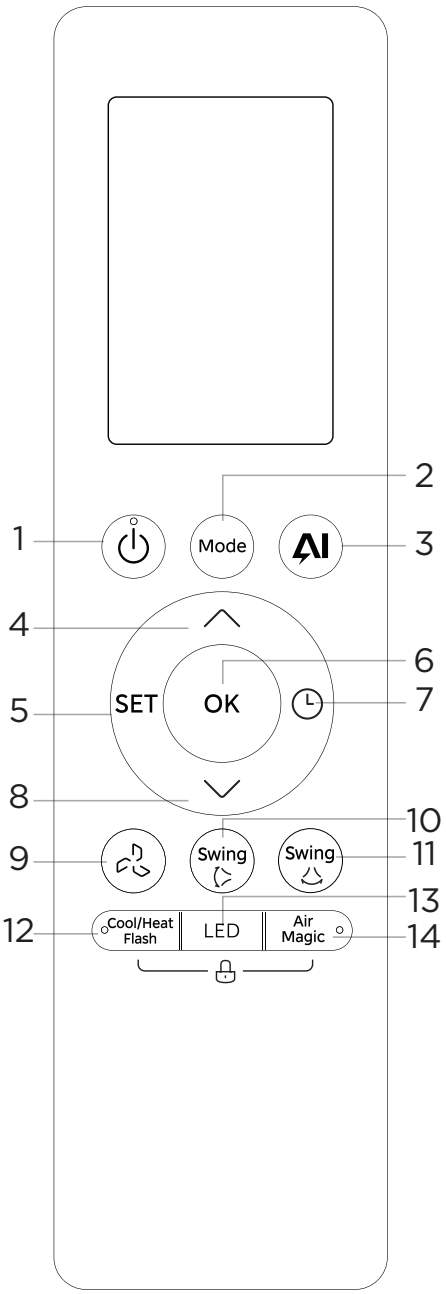

Model: RG10E8(B2S)/BGEF

Description	
1	**ON/OFF:** Turn the unit on or off.
2	**Mode**: Auto > Cool > Dry > Heat > Fan
3	**ECOMASTER**: Starts and stops the energy saving operation.
4	**Temp Up**: Increases temperature in 1°C (1°F) increments. Max. temperature is 30°C (86°F). NOTE: Press together ^ & v buttons at the same time for 3 seconds will alternate the temperature display between the °C & °F
5	**SET:** Follow Me > Active clean > Intelligent humidity control > AP mode* > Sleep > Breeze away [*]: Model dependent
6	**OK**: Used to confirm the selected functions
7	**Timer**: Set timer to turn unit on or off.
8	**Temp Down**: Decreases temperature in 1°C (1°F) increments. Min. temperature is 16°C (60°F).
9	**Fan Speed**: AU > 20% >40% > 60% > 80% > 100%. Press the TEMP ^ or v button to increase/decrease the fan speed in 1% increments.
10	**Swing (up and down)**: Starts and stops the horizontal louver movement.
11	**Swing (left and right)**: Starts and stops the vertical louver movement.
12	**Cool/Heat Flash:** Reduce (cool mode) or raise (heat mode) temperature in a short time.
13	**LED:** Turns LED display & air conditioner buzzer on and off.
14	**Air Magic:** Used to initiate the Ion/UV lamp feature.
15	**Lock:** Press together Cool/Heat Flash and Air Magic buttons simultaneously for 5 seconds to lock the keyboard. Press together these two buttons for 2 seconds to unlock the keyboard.

Remote Screen Indicators

Information is displayed when the remote controller is power up.

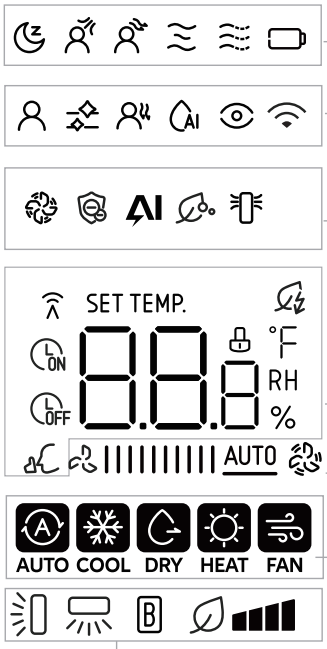

Sleep mode | Not available for this unit. | Breeze away people | Not available for this unit. | Low battery (If flashes)

Follow me | Active clean | Intelligent humidity control | Not available for this unit. | Intelligent eye | Wireless control *

[*]: Model dependent

Cool/Heat Flash | Air magic* | ECOMASTER | Fresh * | Not available for this unit.

[*]: Model dependent

Transmission Indicator | Timer ON | Timer OFF | Lock Feature | Silent Feature | Not available for this unit.

Temperature/Timer/Fan speed display
Displays the set temperature by default, fan speed or timer setting when using TIMER ON/OFF functions.

FAN SPEED

AUTO	SILENT	LOW	MED	HIGH
AUTO				
	1% 2-20%	21-40%	41-60%	61-80% 81-100%

NOTE: The fan speed can not be adjusted in AUTO or DRY mode.

MODE display : Displays the current mode

AUTO | COOL | DRY | HEAT | FAN

AUTO and HEAT mode are for cooling and heating models only.

Horizontal louver swing

Vertical louver auto swing (some units)

Not available for this unit

Note:
All indicators shown above are for information purposes. During the actual operation, only the relevant indicators will be shown on the display.

How to Use Basic Functions

NOTE

Before operation, please ensure the unit is plugged in and power is available.

AUTO Mode

Select AUTO mode → Set your desired temperature → Turn on the air conditioner

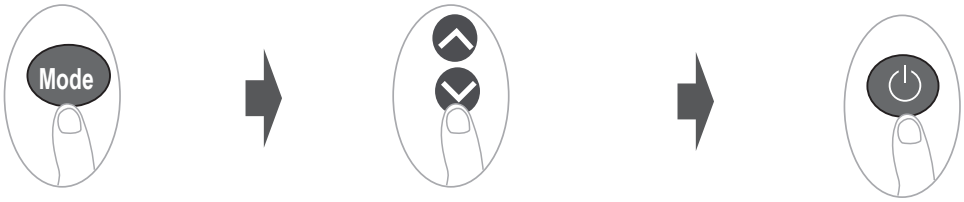

Note:

1. In AUTO mode, the unit will automatically select the COOL, FAN, or HEAT function based on the selected temperature.
2. In AUTO mode, fan speed cannot be set.

COOL or HEAT Mode

Select COOL/HEAT mode → Set the temperature → Set the fan speed → Turn on the air conditioner

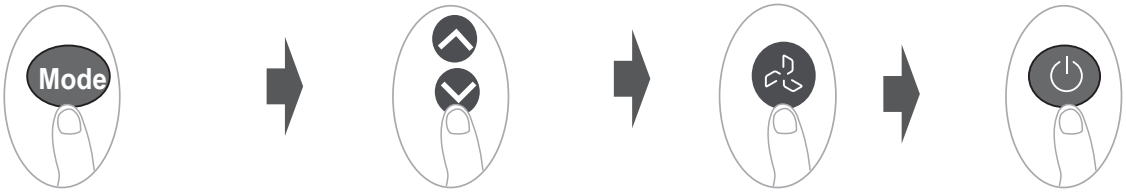

Note: Heat mode is only applicable to the Cooling & Heating models only.

DRY Mode

Select DRY mode → Set your desired temperature → Turn on the air conditioner

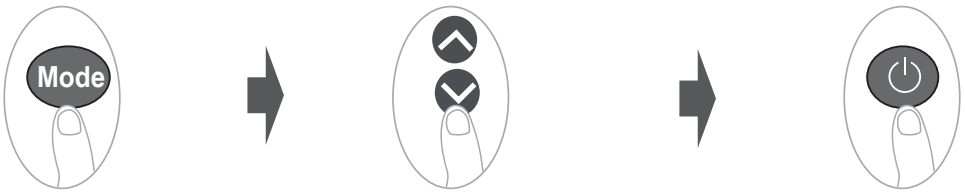

Note: In DRY mode, fan speed cannot be set since it has already been automatically controlled.

FAN Mode

Select FAN mode → Set the fan speed → Turn on the air conditioner



Note: In FAN mode, you can't set the temperature. As a result, no temperature is displayed on the remote's screen.

Setting the TIMER

TIMER ON/OFF - Set the amount of time after which the unit will automatically turn on/off.

TIMER ON setting

Press TIMER button to initiate the time ON sequence.

Press Temp. up or down buttons to set the length of time after which you would like the unit to turn ON. Wait for 1 second to activate time to turn on the unit.

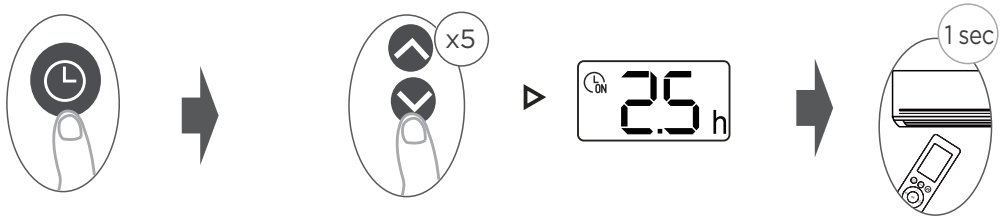

TIMER OFF setting

Press TIMER button to initiate the time OFF sequence.

Press Temp. up or down buttons to set the length of time after which you would like the unit to turn OFF. Wait for 1 second to activate time to turn off the unit.

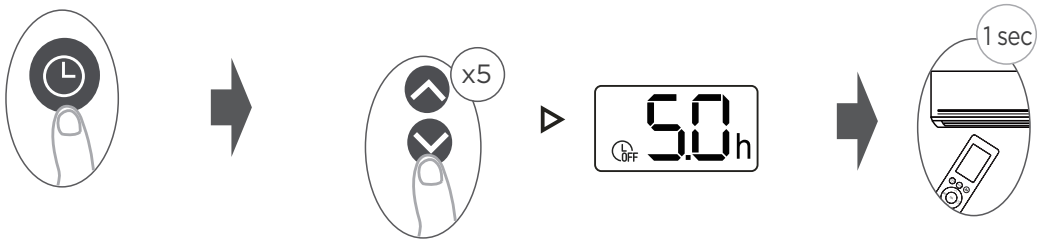

Note:

1. When setting the TIMER ON or TIMER OFF, the time will increase in 30 minutes increments with each press, up to 10 hours. After 10 hours and up to 24, it will increase in 1 hour increments (For example, press 5 times to get 2.5h and press 10 times to get 5h). The timer will revert to 0.0 after 24.
2. Cancel either function by setting the timer to 0.0h.

TIMER ON & OFF setting (example)

Keep in mind that the time periods you set for both functions refer to hours after the current time.

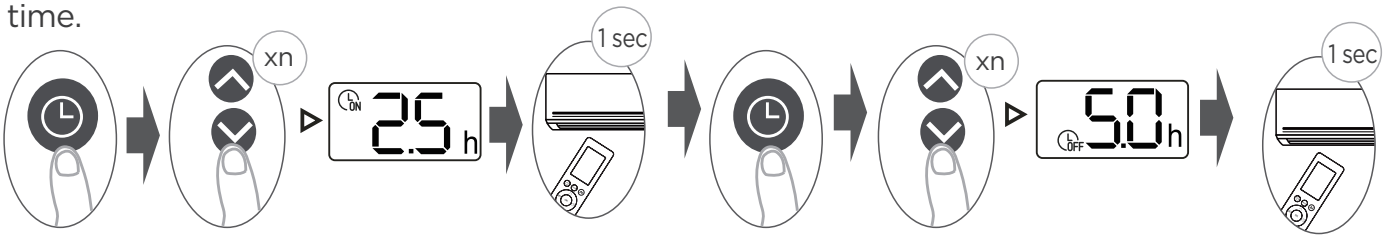

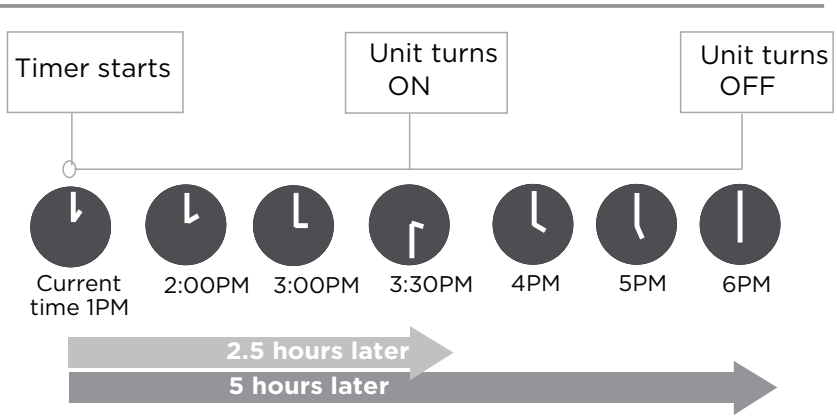

Example: If current timer is 1:00PM, to set the timer as above steps, the unit will turn on 2.5h later (3:30PM) and turn off at 6:00PM.

How to Use Advanced Functions

Swing function

For model RG10E5(B2S)/BGEF

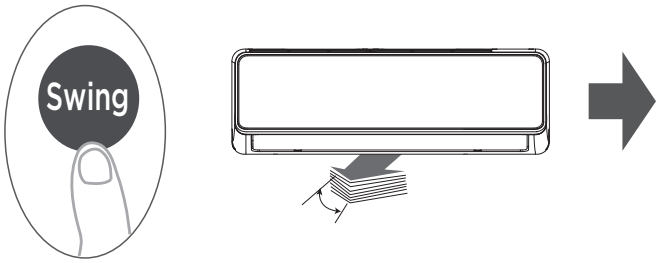

Press this button repeatedly, and if the interval between presses is within 3 seconds, the horizontal louver will operate in the following order:
Louver auto swing stop > Louver auto swing start > Louver angle 1 > Louver angle 2 > Louver angle 3 > Louver angle 4 > Louver angle 5.

Press this button repeatedly, and if the interval between presses is more than 3 seconds, the horizontal louver will operate in the following order:
Louver at a certain angle > Louver auto swing start > Louver auto swing stop.

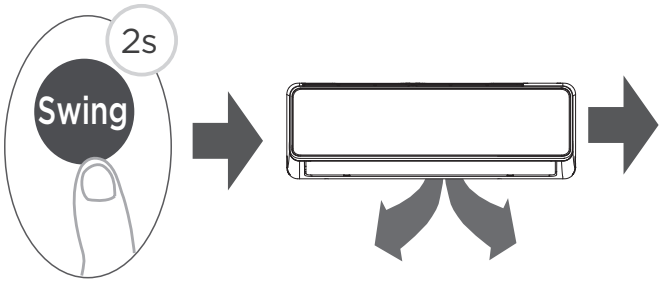

Keep pressing this button more than 2 seconds, the vertical louver will swing left and right automatically.

For model RG10E8(B2S)/BGEF

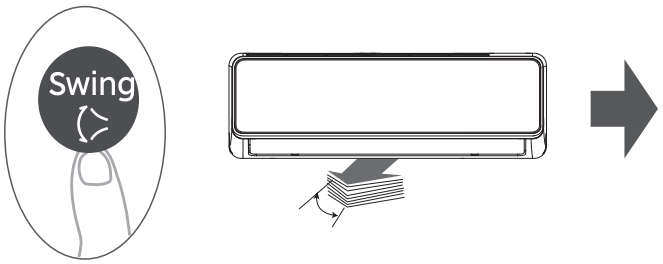

Press this button repeatedly, and if the interval between presses is within 3 seconds, the horizontal louver will operate in the following order:
Louver auto swing stop > Louver auto swing start > Louver angle 1 > Louver angle 2 > Louver angle 3 > Louver angle 4 > Louver angle 5.

Press this button repeatedly, and if the interval between presses is more than 3 seconds, the horizontal louver will operate in the following order:
Louver at a certain angle > Louver auto swing start > Louver auto swing stop.

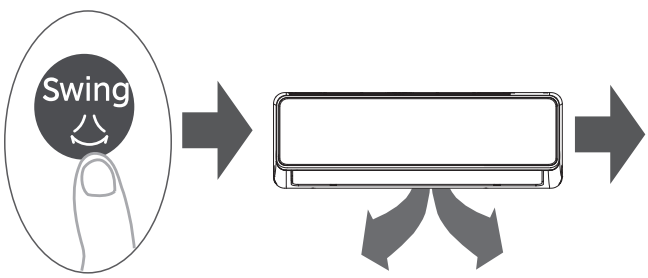

Press this button, the vertical louver will swing left and right automatically.

LED DISPLAY

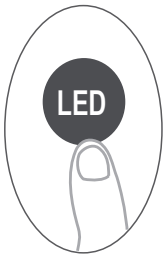

Press this button to turn on and turn off the display on the indoor unit.

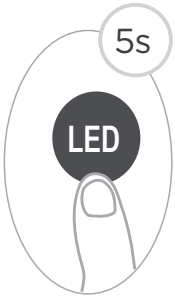

Press this button more than 5 seconds (some units)

Keep pressing this button more than 5 seconds, the indoor unit will display the actual room temperature. Press more than 5 seconds again will revert back to display the setting temperature.

Silent function

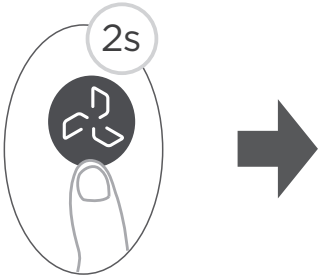

Keep pressing Fan button for more than 2 seconds to activate/ disable silent function. (some units)

Due to low frequency operation of compressor, it may result in insufficient cooling capacity.

Cool/Heat Flash function

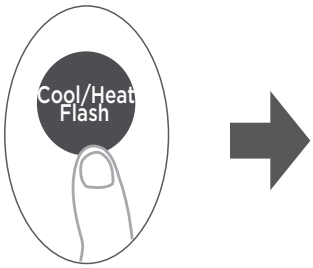

When you press this button in COOL mode, the Cool Flash function will start. The unit will produce a large volume of air and high airflow, the temperature of the whole room will be reduced in a short time.

When you press this button in HEAT mode, the Heat Flash function will start. Fast and strong hot airflow will warm up your whole room in a short time.

Air magic function

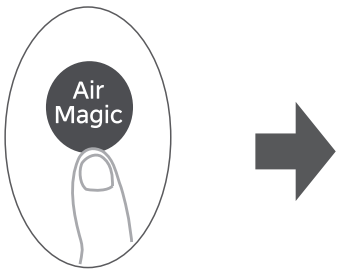

Press this button, the Ionizer or UV-C lamp (model dependent) will be activated. If has both features, these two features will be activated at the same time. This function will help to purify the air in the room.

ECOMASTER function

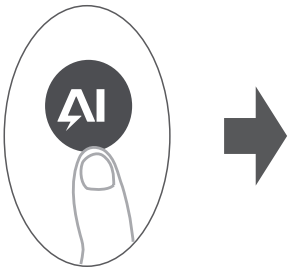

Press this button when in Cool mode, the fan speed will change to Auto, the set temperature will remain unchanged which brings more comfortable feelings and power-saving, and reduces temperature fluctuations.

NOTE: This function is only available when the unit is in Cool mode. The Cool Flash and Silent function will be cancelled when the ECOMASTER function is activated. Initiating the Active clean, Cool Flash, Silent function or pressing the MODE or ON/OFF button will cancel the ECOMASTER function.

Intelligent Humidity Control
(Model RG10E5(B2S)/BGEF)

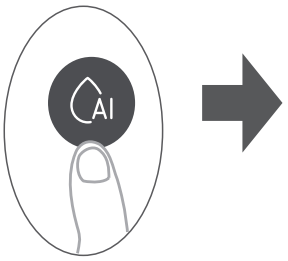

Press this button when in Cool mode, the fan speed will change to Auto, the set temperature will remain unchanged. The system can control the room humidity to ensure that it is not too dry or too damp while maintaining a comfortable temperature.

NOTE: This function is only available when the unit is in Cool mode. When the Intelligent Humidity Control function is activated, the Cool Flash, Silent, ECOMASTER or Active clean function will automatically exit if it is enabled on the machine. When turning the unit off or initiating the Active clean or ECOMASTER function, the Intelligent Humidity Control function will automatically exit.

Louver reset function

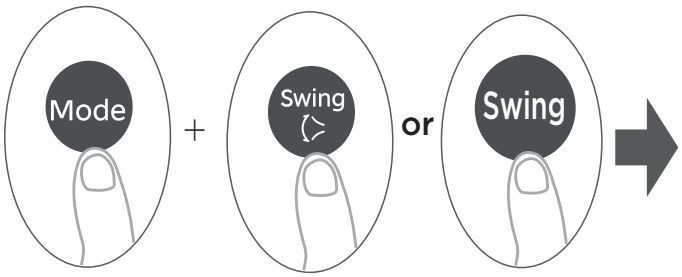

Turn off system from remote control and then press “Mode” and “Swing” button to together until hear beep sound from indoor. The indoor is into louver re-set mode. Do not press any button and it is completing the process automatically.

SET function

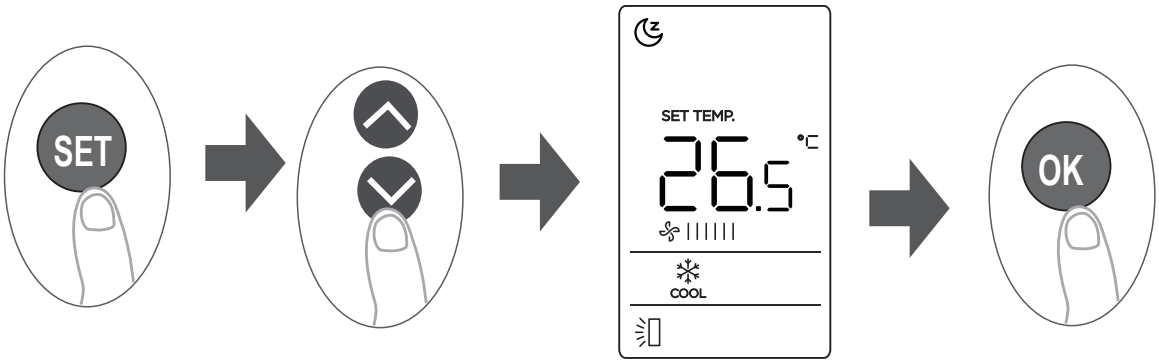

- Press the SET button to enter the function setting, then press SET button or TEMP ∨ or ∧ TEMP button to select the desired function. The selected symbol will flash on the display area, press the OK button to confirm.
- To cancel the selected function, just perform the same procedures as above.
- Press the SET button to scroll through operation functions as follows:
  Follow Me ( ) > Active clean ( ) > Intelligent humidity control ( ) > AP mode*( ) > Sleep ( ) > Breeze away ( )
  [∗]: Model dependent.

  Note: If your remote controller has Intelligent humidity control button, you can not use the SET button to select this feature.

Follow Me function

The FOLLOW ME function enables the remote control to measure the temperature at its current location and send this signal to the air conditioner in 3 minute intervals. When using AUTO, COOL or HEAT modes, measuring ambient temperature from the remote control (instead of from the indoor unit itself) will enable the air conditioner to optimize the temperature around you and ensure maximum comfort.

NOTE: Press and hold Cool/Heat Flash button for 7 seconds to start/stop the memory feature of the Follow Me function.

- If the memory feature is activated, “On” displays for 3 seconds on the screen.
- If the memory feature is stopped, “OF” displays for 3 seconds on the screen.
- While the memory feature is activated, pressing the ON/OFF button, shifting the mode or a power failure will not cancel the Follow Me function.

Active Clean function

The Active Clean technology removes dust and mold that may cause odors. Active Clean rapidly freezes and thaws the heat exchanger, to clean away material that has adhered to it. When this function is turned on, the indoor unit displays “CL”. After 20 to 130 minutes, the unit will turn off automatically and terminate CLEAN function.

Intelligent Humidity Control function

Press this button when in Cool mode, the fan speed will change to Auto, the set temperature will remain unchanged. The system can control the room humidity to ensure that it is not too dry or too damp while maintaining a comfortable temperature.

AP function (some units)

Use the SET button to choose AP (Access Point) mode to enable wireless configuration. If this function is not available on this unit, it might be possible to enter AP mode by pressing the LED button 7 times in 10 seconds.

Sleep function

Use this feature to decrease energy use while you sleep. When the sleep function is activated, the air conditioner will intelligently adjust temperature, fan speed to provide a more comfortable sleeping environment. Under sleep operation, the system will automatically remember the set temperature within 30 minutes. The next time it is activated, it will start running at the temperature of the last memory. After the sleep function is activated, it will automatically be cancelled after 9 hours.

Breeze away function

This feature avoids direct air flow blowing on the body and makes you feel indulging in silky coolness.
Note: This feature is available under cool, Fan and Dry mode only.

Packing and Unpacking The Unit

Instructions for packing and unpacking the unit:

Unpacking:
Indoor unit:

1. Cut the sealing tape on the carton with a knife, one cut on the left, one cut in the middle and one cut on the right.
2. Use the vice to take out the sealing nails on the top of the carton.
3. Open the carton.
4. Take out the middle support plate if it is included.
5. Take out the accessory package, and take out the connecting wire if it is included.
6. Lift the machine out of the carton and lay it flat.
7. Remove the left and right package foam or the upper and lower packaging foam, untie the packaging bag.

Outdoor Unit

1. Cut the packing belt.
2. Take the unit out of the carton.
3. Remove the foam from the unit.
4. Remove the packaging bag from the unit.

Packing:
Indoor unit:

1. Put the indoor unit into the packing bag.
2. Attach the left and right package foam or the upper and lower packaging foam to the unit.
3. Put the unit into the carton, then put accessory package in.
4. Close the carton and seal it with the tape.
5. Using the packing belt if necessary.

Outdoor unit:

1. Put the outdoor unit into the packing bag.
2. Put the bottom foam into the box.
3. Put the unit into the carton, then put the upper packaging foam on the unit.
4. Close the carton and seal it with the tape.
5. Using the packing belt if necessary.

NOTE: Please keep all packaging items if you may need in the future.

Trademarks, Copyrights and Legal Satement

Midea logo, word marks, trade name, trade dress and all versions thereof are valuable assets of Midea Group and/or its affiliates (“Midea”), to which Midea owns trademarks, copyrights and other intellectual property rights, and all goodwill derived from using any part of an Midea trademark. Use of Midea trademark for commercial purposes without the prior written consent of Midea may constitute trademark infringement or unfair competition in violation of relevant laws.

This manual is created by Midea and Midea reserves all copyrights thereof. No entity or individual may use, duplicate, modify, distribute in whole or in part this manual, or bundle or sell with other products without the prior written consent of Midea.

All the described functions and instructions were up to date at the time of printing this manual. However, the actual product may vary due to improved functions and designs.

Disposal and Receycling

Important instructions for environment(European Disposal Guidelines)

Compliance with the WEEE Directive and Disposing of the Waster Product:
This product complies with EU WEEE Directive. This product bears a classification symbol for waster electrical and electronic equipment (WEEE).

This symbol indicates that this product shall not be disposed with other household wastes at the end of its service life. Used device must be returned to official collection point for recycling of electrical electronic devices. To find these collection systems please contact to your local authorities or retailer where the product was purchased. Each household performs important role in recovering and recycling of old appliance. Appropriate disposal of used appliance helps prevent potential negative consequences for the environment and human health.



Data Protection Notice

For the provision of the services agreed with the customer,
we agree to comply without restriction with all stipulations of applicable data protection law, in line with agreed countries within which services to the customer will be delivered, as well as, where applicable, the EU General Data Protection Regulation (GDPR).

Generally, our data processing is to fulfil our obligation under contract with you and for product safety reasons, to safeguard your rights in connection with warranty and product registration questions. In some cases, but only if appropriate data protection is ensured, personal data might be transferred to recipients located outside of the European Economic Area.

Further information are provided on request. You can contact our Data Protection Officer via **MideaDPO@midea.com**. To exercise your rights such as right to object your personal date being processed for direct marketing purposes, please contact us via **MideaDPO@midea.com**. To find further information, please follow the QR Code.

The design and specifications are subject to change without prior notice for product improvement. Consult with the sales agency or manufacturer for details. Any updates to the manual will be uploaded to the service website, please check for the latest version.

The product meets the requirements of Cyber Security (Security Standards for Smart Devices) Rules 2025. Find the Statement of Compliance in these webside: https://www.midea.com/au/support/statement-of-compliance

Importer: MIDEA AIR CONDITIONING AUSTRALIA

Manufacturer:
GD Midea Air-Conditioning Equipment Co., Ltd.
Lingang Road Beijiao Shunde Foshan
Guangdong People's Republic of China 528311

Midea

make yourself at home

https://www.midea.com/au
https://www.mdhome.com.au

© Midea 2022 all rights reserved

CS040UI-EZ2
16122600A10272
2025.06.19